University of Nebraska - Lincoln
DigitalCommons@University of Nebraska - Lincoln

Architectural Engineering -- Faculty Publications | Architectural Engineering

5-1-2005

FUME HOOD EXHAUST STACK SYSTEM

Mingsheng Liu
University of Nebraska–Lincoln, mliu2@unl.edu

Follow this and additional works at: http://digitalcommons.unl.edu/archengfacpub

Part of the Architectural Engineering Commons

Liu, Mingsheng, "FUME HOOD EXHAUST STACK SYSTEM" (2005). *Architectural Engineering -- Faculty Publications.* Paper 2.
http://digitalcommons.unl.edu/archengfacpub/2

This Article is brought to you for free and open access by the Architectural Engineering at DigitalCommons@University of Nebraska - Lincoln. It has been accepted for inclusion in Architectural Engineering -- Faculty Publications by an authorized administrator of DigitalCommons@University of Nebraska - Lincoln.

US006890252B2

(12) **United States Patent**
Liu

(10) **Patent No.: US 6,890,252 B2**
(45) **Date of Patent: May 10, 2005**

(54) **FUME HOOD EXHAUST STACK SYSTEM**

(76) Inventor: **Mingsheng Liu**, 17569 "Y" St., Omaha, NE (US) 68135

(*) Notice: Subject to any disclaimer, the term of this patent is extended or adjusted under 35 U.S.C. 154(b) by 213 days.

(21) Appl. No.: **10/275,059**

(22) PCT Filed: **May 1, 2001**

(86) PCT No.: **PCT/US01/14046**

§ 371 (c)(1),
(2), (4) Date: **Mar. 10, 2003**

(87) PCT Pub. No.: **WO01/83125**

PCT Pub. Date: **Nov. 8, 2001**

(65) **Prior Publication Data**

US 2003/0207662 A1 Nov. 6, 2003

Related U.S. Application Data

(60) Provisional application No. 60/201,226, filed on May 1, 2000.

(51) **Int. Cl.**[7] **B08B 15/02**
(52) **U.S. Cl.** **454/61**; 454/27
(58) **Field of Search** 454/1, 3, 27, 30, 454/31, 61, 62

(56) **References Cited**

U.S. PATENT DOCUMENTS

4,203,485 A 5/1980 Zilbermann et al.
4,377,969 A 3/1983 Nelson
4,513,574 A 4/1985 Humphreys et al.
4,519,217 A 5/1985 Phillips et al.
4,706,553 A 11/1987 Sharp et al.
4,775,001 A 10/1988 Ward et al.
4,915,294 A 4/1990 Wylie
5,031,515 A 7/1991 Niemelä et al.
5,080,282 A 1/1992 Harmon
5,103,896 A 4/1992 Saga
5,297,954 A 3/1994 Colagiovanni
5,538,471 A 7/1996 Guiles, Jr.
5,597,354 A 1/1997 Janu et al.
5,632,675 A 5/1997 Kanninen et al.
5,643,077 A 7/1997 Ayer
5,697,838 A * 12/1997 Morris 454/62
5,707,005 A 1/1998 Kettler et al.
5,724,701 A 3/1998 Jones
5,810,657 A 9/1998 Pariseau
5,873,257 A 2/1999 Peterson
5,881,806 A 3/1999 Rudd
5,907,956 A 6/1999 Arima et al.
5,916,252 A 6/1999 Yoshida et al.
5,927,599 A 7/1999 Kath
5,945,924 A 8/1999 Marman et al.
5,966,773 A 10/1999 Jones
5,976,010 A 11/1999 Reese et al.
5,979,167 A 11/1999 Kochavi et al.
5,983,890 A 11/1999 Thomas et al.
5,991,394 A 11/1999 Dezonno et al.
6,006,142 A 12/1999 Seem et al.
6,006,528 A 12/1999 Arima et al.
6,008,733 A 12/1999 Okano et al.
6,009,939 A 1/2000 Nakanishi et al.
6,071,188 A 6/2000 O'Neill et al.

* cited by examiner

Primary Examiner—Harold Joyce
(74) *Attorney, Agent, or Firm*—Shook, Hardy & Bacon LLP

(57) **ABSTRACT**

A fume hood exhaust stack system (**10**) and method utilize a variable speed fan (**24**) and an exhaust stack (**28**) having an adjustable cross-sectional area. Toxic exhaust from one or more fume hoods (**12**) is conveyed through a header (**16**) to the fan. The fan forces the exhaust through the exhaust stack, and the exhaust is then discharged into the atmosphere at a sufficient velocity and momentum to ensure that the exhaust reaches an environmentally sound altitude. A variable speed drive (**36**), programmable controller (**34**), flow signals (**26**), and static pressure and total pressure signals (**20**) are utilized to modulate the speed of the fan and the area of the exhaust stack to maintain the desired fan inlet pressure and exhaust velocity.

14 Claims, 3 Drawing Sheets

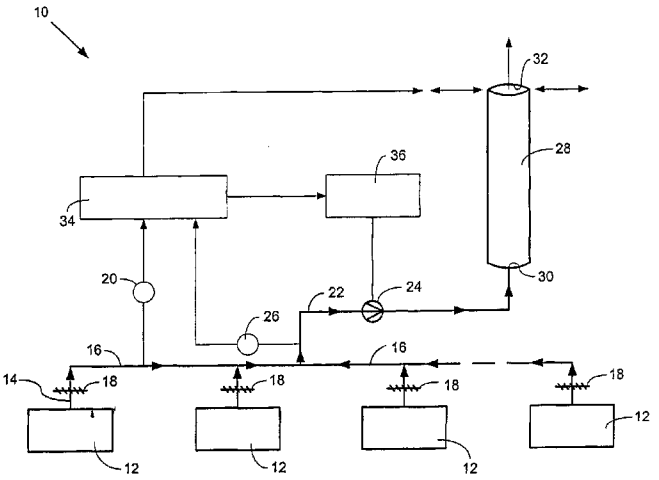

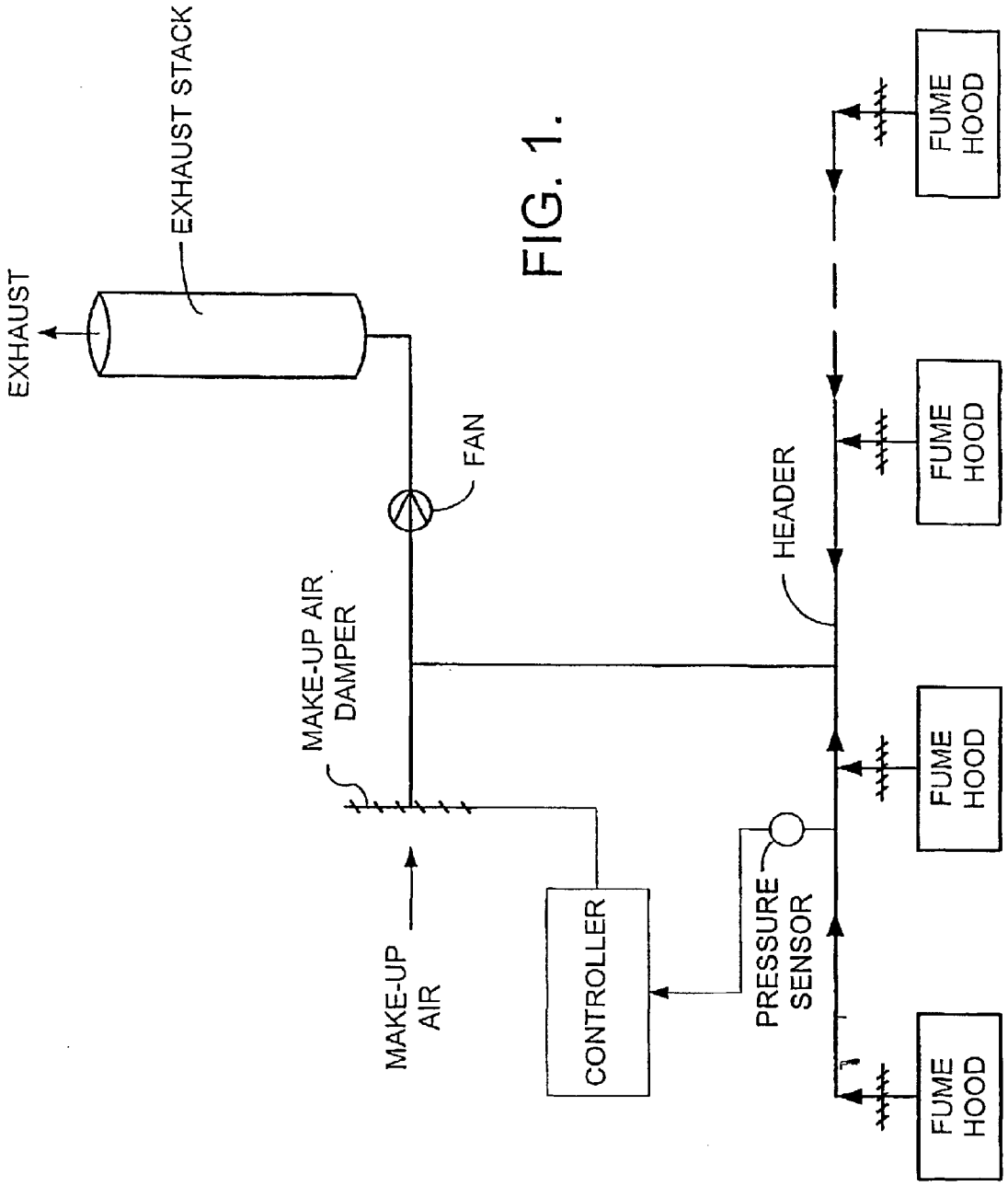
EXHAUST
EXHAUST STACK
FAN
MAKE-UP AIR DAMPER
MAKE-UP AIR
CONTROLLER
PRESSURE SENSOR
HEADER
FUME HOOD
FUME HOOD
FUME HOOD
FUME HOOD

FIG. 1.

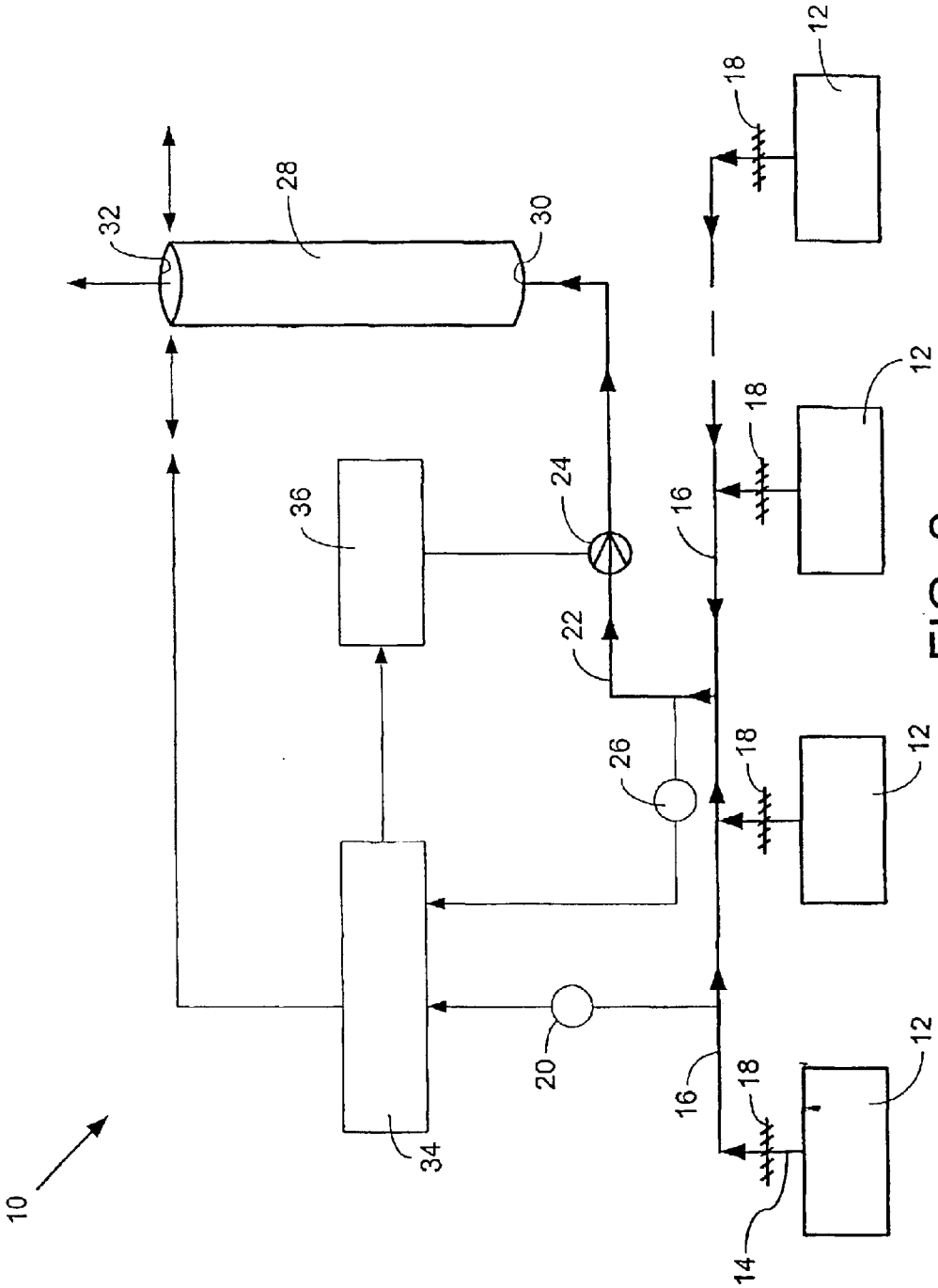

FIG. 2.

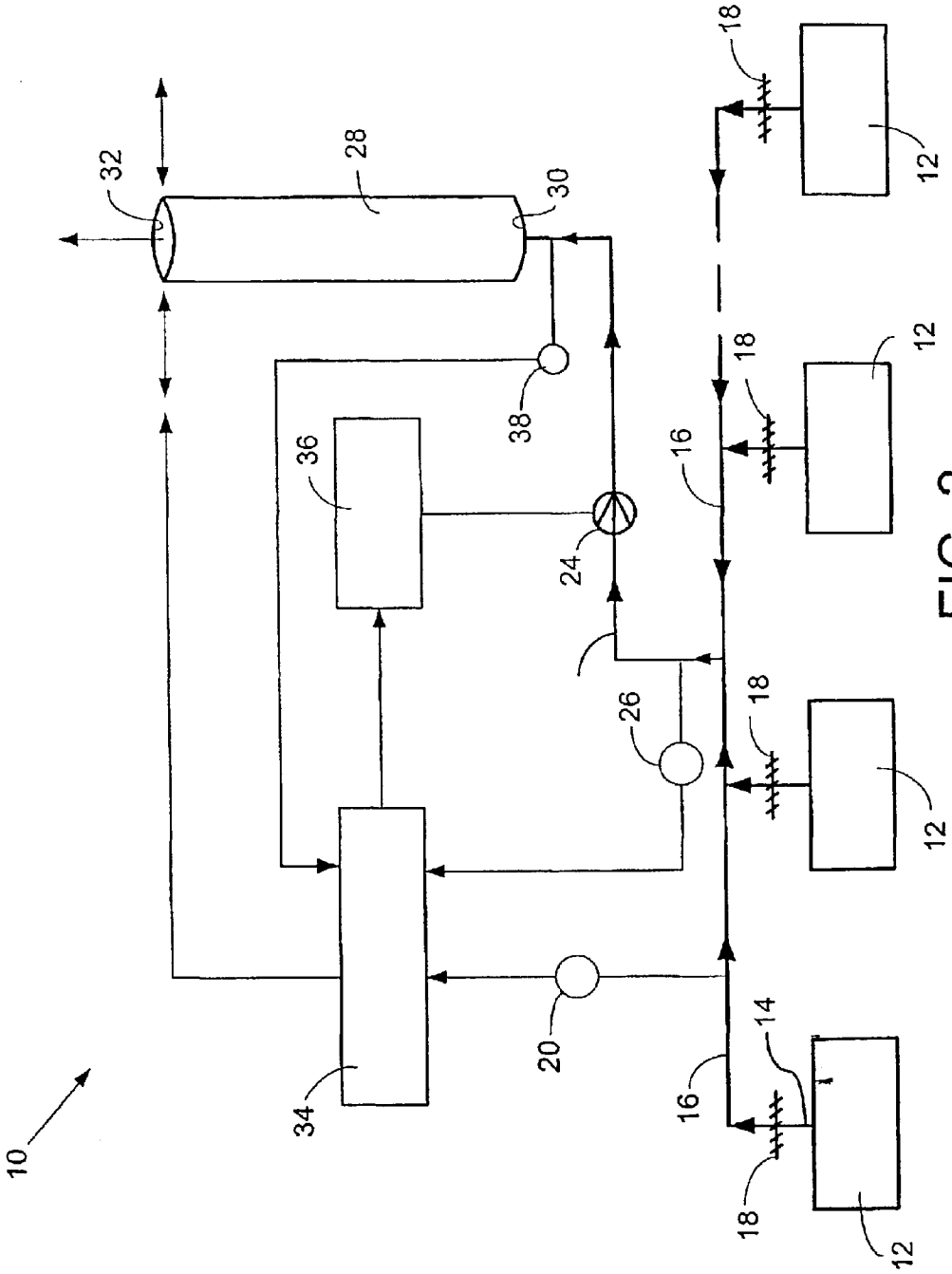

FIG. 3.

FUME HOOD EXHAUST STACK SYSTEM

CROSS-REFERENCE TO RELATED APPLICATIONS

This patent application is a nonprovisional application claiming priority from U.S. provisional application No. 60/201,226, filed in the United States Patent and Trademark Office on or about May 1, 2000.

STATEMENT REGARDING FEDERALLY SPONSORED RESEARCH OR DEVELOPMENT

Not applicable.

BACKGROUND OF THE INVENTION

This invention relates generally to exhaust systems and methods, and more particularly to an energy efficient and environmentally sound advanced stack system and method for exhausting toxic air from fume hoods.

Laboratories and other facilities typically contain fume hoods in which chemical processes produce toxic fumes. These facilities necessarily contain fume exhaust stack systems that exhaust this toxic air from the building and send the toxic air through a stack to a prescribed minimum altitude such that fresh air contamination and environmental pollution is reduced. To satisfy environmental safety standards, the fume exhaust stack system must provide a minimum velocity and momentum to the toxic exhaust exiting the stack to ensure that the toxic exhaust reaches a minimum altitude substantially higher than the outlet of the stack. Due to architecture, structural, and economic limitations, however, the stack is often required to be as short as possible.

A typical fume hood exhaust stack system (depicted in FIG. 1) consists of a stack, a constant-speed fan, a make-up air damper, fume hoods, a static pressure sensor, and a controller. In these conventional fume exhaust stack systems, the total toxic air flow rate and volume from the fume hoods are significantly below the optimal design values because the majority of the fume hoods are typically in a standby mode in which they exhaust little or no toxic air into the exhaust header. These system utilize a controller that modulates a make-up air damper to maintain a static pressure set point at the exhaust header. When the toxic air flow rate decreases to a value less than the design value, the controller opens the make-up air damper to maintain the desired static pressure set point; conversely, when the toxic air flow rate increases, the controller closes the make-up air damper to maintain the set point. Since the static pressure sensor is often located far from the mixing junction of the make-up air conduit and exhaust header discharge conduit, the static pressure at the inlet of the fan is significantly higher under partial exhaust air flow conditions than under full exhaust air flow conditions.

Under partial exhaust conditions—when the make-up air damper is open or partially open—the air flow rate through the fan is higher than the design value due to the higher static pressure at the inlet of the fan. The fan power consumption under these partial-exhaust high static pressure conditions is often up to 30% greater than the fan power consumed under full exhaust conditions; fan power consumption increases as exhaust air flow rate decreases. Fan power consumption increases as exhaust air flow decreases. The exhaust fans generally operate for 8,760 hours annually, while the fume hoods generally operate less than two hours per day. These existing systems therefore consume excess power and overload the fan motor when the exhausted toxic air flow from the fume hoods is less than the design value.

There is therefore a need for an energy efficient fume hood exhaust stack system and method that reduces fan power consumption while ensuring that the toxic exhaust discharged from the stack exits the stack with a relatively constant velocity and momentum sufficient to ensure that the toxic exhaust reaches an environmentally sound elevation.

SUMMARY OF THE INVENTION

Accordingly, it is an object of the present invention to provide an advanced fume exhaust stack system and method that consumes less power than conventional systems and methods.

It is also an object of the present invention to provide an advanced fume exhaust stack system and method that ensures that toxic exhaust discharged from the stack has a relatively constant velocity and momentum sufficient to ensure that the toxic exhaust reaches an environmentally sound elevation.

It is a further object of the present invention to provide an advanced fume exhaust stack system utilizing a variable-speed motor driven fan and an adjustable area stack outlet.

It is also an object of the present invention to utilize a programmable controller and variable speed drive to maintain the exhaust pressure at the inlet of the fan at a relatively constant desired level.

It is another object of the present invention to provide an advanced fume exhaust stack system that utilizes a programmable controller to modulate the outlet area of the exhaust stack to substantially maintain the total pressure at a constant total pressure set point, thereby ensuring that the toxic exhaust discharged from the stack has a relatively constant velocity and momentum sufficient to ensure that the toxic exhaust reaches an environmentally sound elevation.

It is yet another object of the present invention to provide an advanced fume exhaust stack system that utilizes a programmable controller to modulate the outlet area of the exhaust stack to substantially maintain the exhaust flow rate at a constant-design flow rate, thereby ensuring that the toxic exhaust discharged from the stack has a relatively constant velocity and momentum sufficient to ensure that the toxic exhaust reaches an environmentally sound elevation.

Accordingly, the present invention provides for an energy efficient and environmentally sound advanced fume hood exhaust stack system and method that maintains a relatively constant static pressure at the inlet of the fan and Maintains a relatively constant desired velocity and momentum of the exhaust by modulating the diameter of the exhaust stack outlet. The system and method utilize a stack with an adjustable outlet, a fan, a variable speed drive, a flow sensor or total pressure sensor, a static pressure sensor, and a controller. No make-up air is utilized. The variable speed drive receives signals from the controller and modulates the fan speed to maintain a desired static pressure set point. When the measured static pressure is less than the static pressure set point, the variable speed drive reduces the speed of the fan to increase the static pressure to the set point. When the measured static pressure is greater than the static pressure set point, the variable speed drive increases the speed of the fan to reduce the static pressure to the set point. The advanced stack system is generally controlled and operated in three modes to maintain an exhaust flow from the stack having a desired constant velocity and momentum; the controller may be programmed with a variety of algorithms, equations, and set points, including static pres-

sure set points, total pressure set points, stack outlet diameter set points, and exhaust flow rate set points.

BRIEF DESCRIPTION OF THE DRAWINGS

In the accompanying drawings, which form a part of the specification and are to be read in conjunction therewith, and in which like reference numerals are used to indicate like parts in the various views:

FIG. **1** is a schematic of a conventional fume exhaust stack system having a constant speed fan, make-up air damper, and fixed area stack.

FIG. **2** is a schematic of an advanced fume exhaust stack system having a flow sensor and a controller which modulates the outlet area of the stack based on the measured exhaust air flow.

FIG. **3** is a schematic of an advanced fume exhaust stack system having a total pressure sensor, flow sensor, and a controller which modulates the outlet area of the stack to maintain a total pressure set point.

DETAILED DESCRIPTION OF THE PREFERRED EMBODIMENTS

Referring to the drawings in greater detail, and initially to FIG. **2**, an advanced fume hood exhaust stack system is designated generally by the numeral **10**. One or more fume hoods **12** collect and discharge toxic exhaust through individual fume hood exhaust conduits **14** and into a common exhaust header **16**. Individual fume hood exhaust dampers **18** may be positioned in the individual fume hood exhaust conduits **14**, as depicted in FIG. **2**, to enable a particular fume hood **12** to be isolated from the system.

A static pressure sensor and transmitter **20** is located at exhaust header **16** and measures the static pressure of the exhaust within the header **16**. The pressure sensor and transmitter **20** is adapted to transmit a signal proportional to the static pressure of the exhaust within the header **16**. The proportional transmitter signal may be a pulse signal, a 4–20 mA signal, or other electrical or digital signal commonly employed by and well known to those skilled in the art.

A header discharge conduit **22** conveys exhaust from the header **16** to the inlet of a fan **24**. The fan **24** is generally motor driven. As seen in FIG. **2**, a flow sensor and transmitter **26** is located at header discharge conduit **22**, upstream of the fan **24**, and measures the flow rate of the exhaust flowing from the header **16** to the inlet of the fan **24**. The flow sensor and transmitter **26** is adapted to transmit a signal proportional to the flow rate of the exhaust flowing from the header **16** to the inlet of the fan **24**. The proportional transmitter signal may be a pulse signal, a 4–20 mA signal, or other electrical or digital signal commonly employed by and well known to those skilled in the art.

Exhaust is conveyed from the exhaust header **16**, through the header discharge conduit **22** and motor-driven fan **24**, into and through exhaust stack **28**, and into the atmosphere. Exhaust stack **28** has an inlet **30** and an outlet **32**. The outlet **32** of exhaust stack **28** has an adjustable area; the area may be increased or decreased by varying the diameter of the outlet **32** or otherwise modulating the area through which exhaust exits the stack **28** and is ejected into the atmosphere. The area of outlet **32** is modulated by a controller **34**. The controller **34** is typically a programmable logic controller (PLC) or other programmable controller of the type commonly used by and well known to those skilled in the art. The controller **34** receives and processes a signal from the static pressure sensor and transmitter **20** proportional to the static pressure of the header **16**. The controller **34** also receives and processes a signal from the flow sensor and transmitter **26** proportional to the rate of exhaust flow from the header **16** to the fan **24**. The controller may be programmed with a variety of desired set points, including various static pressure set points, total pressure set points, stack outlet diameter set points, and design exhaust flow rates. The controller **34** is adapted to transmit a signal to variable speed drive **36** which, in turn, is adapted to transmit a signal to the electric motor of motor-driven fan **24** to modulate the speed of fan **24**. It will be understood that variable speed drive **36** may be a variable frequency drive or other electrical or electromechanical drive (e.g. an eddy current drive or viscous drive) commonly used and well known to those skilled in the art.

In operation, and in the configuration depicted in FIG. **2** and described above, the controller **34** is programmed with a desired static pressure set point, a design flow rate, and a maximum design diameter of stack outlet **32** for the design flow rate. The controller modulates the diameter of outlet **32** based on the flow rate measured by flow sensor and transmitter **26**. The set point of the diameter of outlet **32** is calculated from the following equation and is based on the measured flow rate:

$$D=D_o(Q/Q_o)$$

Where Q_o is the design flow rate, Q is the flow rate measured by flow sensor and transmitter **26**, and D_o is the maximum design diameter of outlet **32**.

As the variable speed drive **36** increases the speed of fan **24**, the flow rate of exhaust from header **16** to stack **28** increases and the static pressure at header **16** and the inlet of fan **24** decreases toward a desired static pressure set point. As the variable speed drive **36** decreases the speed of fan **24**, the flow rate of exhaust from header **16** to stack **28** decreases and the static pressure at header **16** increases toward the desired static pressure set point. In this manner, the static pressure at header **16** is substantially maintained at the programmed static pressure set point.

To maintain a relatively constant desired exhaust velocity and momentum at the outlet **32** of stack, the diameter of stack outlet **32** is modulated by the controller **34** in accordance with the above programmed equation. If the measured flow rate Q exceeds the design flow rate Q_o, the controller **34** reduces the diameter D of stack outlet **32**, thereby reducing the flow rate Q measured by flow sensor and transmitter **26**. If the measured flow rate Q is less than the design flow rate Q_o, the controller **34** increases the diameter D of stack outlet **32**, thereby increasing the flow rate Q measured by flow sensor and transmitter **26**. In this manner, the flow rate Q is continually modulated toward the programmed design flow rate Q_o to provide a relatively constant and sufficient exhaust velocity and momentum as the exhaust exits the stack **28** through outlet **32**.

Referring now to FIG. **3**, another embodiment of the advanced fume hood exhaust stack system **10** is depicted. In this configuration, as in the configuration depicted in FIG. **2**, one or more fume hoods **12** discharge exhaust through conduits **14** and into an exhaust header **16**. Individual fume hood exhaust dampers **18** may be used to isolate a particular fume hood **12** from the system. Exhaust from header **16** flows through header discharge conduit **22**, through motor-driven fan **24**, and through exhaust stack **28**. Stack **28** has an inlet **30** and an adjustable area outlet **32**. The area of outlet **32** is modulated increased or decreased—by a programmable controller **34**.

Again referring to FIG. **3**, a static pressure sensor and transmitter **20** measures the static pressure at the header **16**

and transmits a signal proportional to the static pressure of the exhaust within the header **16** to the programmable controller **34**. A header discharge conduit **22** conveys exhaust from the header **16** to the inlet of the motor-driven fan **24**. A flow sensor and transmitter **26** is located at header discharge conduit **22**, upstream of the fan **24**, and measures the flow rate of the exhaust flowing from the header **16** to the inlet of the fan **24**. The flow sensor and transmitter **26** is adapted to transmit to the controller **34** a signal proportional to the flow rate of the exhaust flowing from the header **16** to the inlet of the fan **24**. In addition to the static pressure sensor and transmitter **20** and the flow sensor and transmitter **26**, the system depicted in FIG. **3** includes a total pressure sensor and transmitter **38**. Total pressure sensor and transmitter **38** measure the total pressure of the exhaust within header discharge conduit **22** downstream of fan **24** and upstream of exhaust stack **28**, as seen in FIG. **3**, and transmits a signal proportional to the total pressure to the controller **34**. The proportional pressure signal, flow rate signal, and total pressure signal transmitted to the controller **34** may be pulse signals, 4–20 mA signals, or other electrical or digital signals commonly employed by and well known to those skilled in the art. The controller is adapted to transmit a signal to the variable speed drive **36** which, in turn, is adapted to transmit a signal to the electric motor of motor-driven fan **24** to modulate the speed of fan **24**.

In one mode of operation, the system depicted in FIG. **3** utilizes the programmable controller **34** to modulate a total pressure set point based upon the diameter of the outlet **32** of exhaust stack **28**. In this mode of operation, the controller requires signals from the static pressure sensor and transmitter **20** and the total pressure sensor and transmitter **38**; input from the flow sensor and transmitter **26** is not required. The set point of the total pressure is determined by the following equations:

$$P_{set} = P_0 \frac{\left(\frac{D_0}{D}\right)^2 \left[1 + f_0 \frac{L}{D_0} \frac{D_0}{D} + k_e \left(\frac{D}{D_0}\right)^2\right]}{1 + f_0 \frac{L}{D_0}}$$

$$P_0 = \left(1 + f_0 \frac{L}{D_0}\right) \frac{V_0^2}{2g} \rho$$

$$f_o = f(x_0)$$

$$x_0 = \epsilon / D_0$$

$$f = f(x)$$

$$x = \epsilon / D$$

$$f(x) = -53129x^4 + 6033.6x^3 - 233.99x^2 + 4.434x + 0.013$$

$$k_e = 0.9598\left(\frac{D}{D_0}\right)^4 - 1.9541\left(\frac{D}{D_0}\right)^2 + 0.9818$$

Where L is the length of the exhaust stack **28**, D_0 is the maximum diameter of the adjustable stack outlet **32**, V_0 is the design velocity of the exhaust at the outlet **32**, and ϵ is the roughness of the inner surface of the stack **28**.

In another mode of operation, the system depicted in FIG. **3** utilizes the programmable controller **34** to modulate the diameter of the outlet **32** of exhaust stack **28** to maintain a desired total pressure set point. The total pressure set point is determined based upon the above equations. In this mode of operation, the controller **34** requires signals from the static pressure sensor and transmitter **20**, the total pressure sensor and transmitter **36**, and the flow sensor and transmitter **26**.

In operation, the controller **34** is programmed with a desired static pressure set point, a design flow rate, and a maximum design diameter of stack outlet **32**. To maintain the static pressure at header **16** at a substantially constant programmed set point, the controller **34** and variable speed drive **36** modulate the speed of motor-driven fan **34**. To decrease the static pressure at header **16** to a desired static pressure set point, variable speed drive **36** increases the speed of the fan **24** to increase the flow rate of the exhaust from header **16**. To increase the static pressure to a desired static pressure set point, variable speed drive **36** decreases the speed of fan **24** to decrease the flow rate of the exhaust from header **16**. In this manner, the speed of fan **24** is continually modulated to substantially maintain the static pressure at the desired programmed set point.

To maintain the velocity and momentum of the exhaust exiting stack outlet **32** at a substantially constant minimum level, the system depicted in FIG. **3** utilizes total pressure sensor and transmitter **38** to measure the total pressure at the inlet **30** of stack **28** and transmit to controller **34** a signal proportional to the measured total pressure. If the measured total pressure is less than the programmed total pressure set point, minus a dead band value, the diameter of the stack outlet **32** is decreased by controller **34** to satisfy the set point. If the measured total pressure is greater than the programmed total pressure set point, plus a dead band value, the diameter of the stack outlet **32** is increased by controller **34** to satisfy the set point. The total pressure set point is generally updated at programmed time intervals (e.g. every three minutes). In this way, the total pressure is maintained at a minimum desired value, and the velocity and momentum of the exhaust passing through stack **28** are maintained at desired substantially constant values to ensure that the exhaust reaches the desired altitude upon exiting stack outlet **32**.

It will be seen from the foregoing that this invention is one well adapted to attain the ends and objects set forth above, and to attain other advantages which are obvious and inherent in the system and method. It will be understood that certain features and subcombinations are of utility and may be employed without reference to other features and subcombinations. This is contemplated by and within the scope of the claims. It will be appreciated by persons skilled in the art that the present invention is not limited to what has been particularly shown and described hereinabove. Rather, all matter shown in the accompanying drawings or described hereinabove is to be interpreted as illustrative and not limiting.

I claim:

1. A fume exhaust stack system comprising:

one or more fume hoods adapted to emit exhaust into a header, said one or more fume hoods in fluid communication with said header;

an exhaust stack having a cross-sectional area, said area being adjustable;

a fan adapted to convey said exhaust from said header to said stack;

a variable speed drive adapted to modulate the speed of said fan; and

a flow sensor adapted to measure the flow of said exhaust from said header to said stack and to transmit a flow input signal to a controller to direct the degree of modulation performed by the variable speed drive and

the degree of exhaust stack cross-sectional area adjustment, said flow input signal proportional to said flow.

2. The fume exhaust stack system of claim **1**, said stack formed with an inlet and an outlet, said outlet having an adjustable area.

3. The fume exhaust stack system of claim **1**, further comprising a static pressure sensor adapted to measure the static pressure within said header and to transmit a static pressure input signal to a controller, said static pressure input signal proportional to said static pressure.

4. The fume exhaust stack system of claim **1**, further comprising a total pressure sensor adapted to measure the total pressure of said exhaust at the inlet of said stack and to transmit a total pressure input signal to a controller, said total pressure input signal proportional to said total pressure.

5. The fume exhaust stack system of claim **1**, further comprising a controller, said controller adapted to modulate said area.

6. The fume exhaust stack system of claim **5**, said controller being a programmable logic controller adapted to receive and transmit a plurality of input and output signals.

7. The fume exhaust stack system of claim **5**, whereby said controller modulates said area to maintain a desired exhaust velocity and momentum at the outlet of said stack.

8. The fume exhaust stack system of claim **3**, whereby the speed of said fan is modulated to substantially maintain said static pressure at a relatively constant desired level.

9. The fume exhaust stack system of claim **1**, said controller modulating said area based upon said flow.

10. The fume exhaust stack system of claim **4**, said controller modulating said area based upon said total pressure.

11. A system for exhausting fumes through a stack comprising:

generating exhaust in one or more fume hoods;

passing said exhaust from said one or more fume hoods to a header, said header in fluid communication with said one or more fume hoods;

conveying said exhaust to a stack, said stack in fluid communication with said header, said exhaust being conveyed from said header to said stack by a variable speed fan, said stack having an adjustable cross-sectional area;

measuring the flow of said exhaust from said header to said stack and transmitting a flow input signal to a controller to direct (a) modulation of the speed of the fan to maintain the pressure of said exhaust in said header at a substantially constant desired level and (b) modulation of said area of said stack to maintain sufficient velocity and momentum of said exhaust, said flow input signal being proportional to said flow; and

ejecting said exhaust through said stack into the atmosphere.

12. The system of claim **11**, further comprising the steps of measuring the total pressure at the inlet of said stack and transmitting a total pressure input signal to a controller, said total pressure input signal being proportional to said total pressure.

13. The system of claim **11**, further comprising the step of modulating the speed of said fan, whereby the pressure of said exhaust in said header is maintained at a substantially constant desired level.

14. The system of claim **13**, further comprising the steps of measuring the static pressure of said exhaust at said header and transmitting a static pressure input signal to a controller, said static pressure input signal being proportional to said static pressure.

* * * * *