University of Nebraska - Lincoln
DigitalCommons@University of Nebraska - Lincoln

Timothy J. Gay Publications | Research Papers in Physics and Astronomy

10-1-1980

# Orientation and alignment of the $3p\ ^1P$ and $4d\ ^1D$ levels of neutral helium

R. M. Schectman
*University of Toledo, Toledo, Ohio*

R. D. Hight
*University of Toledo, Toledo, Ohio*

S. T. Chen
*University of Toledo, Toledo, Ohio*

L. J. Curtis
*University of Toledo, Toledo, Ohio*

H. G. Berry
*University of Chicago, Chicago, Illinois*

***See next page for additional authors***

Follow this and additional works at: http://digitalcommons.unl.edu/physicsgay

Part of the Physics Commons

Schectman, R. M.; Hight, R. D.; Chen, S. T.; Curtis, L. J.; Berry, H. G.; Gay, Timothy J. ; and Deserio, R., "Orientation and alignment of the $3p\ ^1P$ and $4d\ ^1D$ levels of neutral helium" (1980). *Timothy J. Gay Publications.* Paper 7.
http://digitalcommons.unl.edu/physicsgay/7

This Article is brought to you for free and open access by the Research Papers in Physics and Astronomy at DigitalCommons@University of Nebraska - Lincoln. It has been accepted for inclusion in Timothy J. Gay Publications by an authorized administrator of DigitalCommons@University of Nebraska - Lincoln.

**Authors**
R. M. Schectman, R. D. Hight, S. T. Chen, L. J. Curtis, H. G. Berry, Timothy J. Gay, and R. Deserio

This article is available at DigitalCommons@University of Nebraska - Lincoln: http://digitalcommons.unl.edu/physicsgay/7

Phys. Rev. A 22, 1591 - 1599 (1980) [Issue 4 – October 1980]

# Orientation and alignment of the $3p\ ^1P$ and $4d\ ^1D$ levels of neutral helium

R. M. Schectman, R. D. Hight [*], S. T. Chen [†], and L. J. Curtis
*University of Toledo, Toledo, Ohio 43606*

H. G. Berry, T. J. Gay, and R. Deserio
*University of Chicago, Chicago, Illinois 60637*
*Argonne National Laboratory, Argonne, Illinois 60439*

Received 19 February 1980

The alignment and orientation produced by the tilted-foil excitation of He was studied for a wide range of foil tilt angles and outgoing-atom velocities. In particular, two quantum states of different orbital angular momentum ($3p\ ^1P$ and $4d\ ^1D$) were investigated and the results were compared with a number of previously proposed models.

©1980 The American Physical Society

URL: http://link.aps.org/abstract/PRA/v22/p1591

DOI: 10.1103/PhysRevA.22.1591

---

[*] Thin Film Division, Dale Electronics, Norfolk, Nebraska.
[†] Long Range Research Division, Exxon Production Research Corporation, Houston, Texas.

PHYSICAL REVIEW A VOLUME 22, NUMBER 4 OCTOBER 1980

# Orientation and alignment of the $3p\ ^1P$ and $4d\ ^1D$ levels of neutral helium

R. M. Schectman, R. D. Hight,* S. T. Chen,† and L. J. Curtis
*University of Toledo, Toledo, Ohio 43606*

H. G. Berry, T. J. Gay, and R. Deserio
*University of Chicago, Chicago, Illinois 60637*
*and Argonne National Laboratory, Argonne, Illinois 60439*
(Received 19 February 1980)

The alignment and orientation produced by the tilted-foil excitation of He was studied for a wide range of foil tilt angles and outgoing-atom velocities. In particular, two quantum states of different orbital angular momentum ($3p\ ^1P$ and $4d\ ^1D$) were investigated and the results were compared with a number of previously proposed models.

## I. INTRODUCTION

The excitation process of fast ions traversing thin foils is still not well understood, despite much recent attention.[1] A better knowledge of the mechanisms which give rise to this excitation is of interest for practical reasons, since it is a tool which allows studies of the atomic structure of a large range of ionization stages of most atoms through observation of emitted radiation. This excitation process is also of fundamental interest, as a special case of the ion-solid interaction, and can be used to probe many specific problems in this area. The discovery that there is a significant surface character to the interaction which can be probed by detailed measurements of the polarization of the radiation emitted when fast ions traverse tilted foils[2] has furnished an important technique for further study of this excitation process. The final interaction at the tilted-foil surface readily creates atoms and ions which have nonzero alignment and orientation. These parameters are sensitive to the surface character, the nature of the projectile and its velocity, and to the properties of the excited states of the projectile being studied.

A number of model calculations[3-9] have appeared in the last few years which predict orientation and alignment production. In this paper we present the results of measurements of the alignment and orientation of two singlet levels of neutral helium excited by thin carbon foils. One objective of this work is to probe as far as possible the model calculations already proposed with a systematic set of measurements over large ranges of projectile velocities and foil tilt angles. To this end, we have studied transitions from two neutral helium levels of different orbital angular momentum, $3p\ ^1P$ and $4d\ ^1D$, with foils tilted through angles of 0–60° (and up to 80° in some cases) for incident $He^+$ ions with energies in the range 30–1000 keV.

## II. EXPERIMENT

The data presented here were obtained using three different accelerators: the low-energy positive ion accelerator at the University of Chicago covered the energy range 30–200 keV; the University of Toledo Van de Graaff accelerator was used for studies in the energy range 100–425 keV; and the Argonne National Laboratory Dynamitron provided data at the higher energies, 400–1000 keV. Results from the different laboratories, obtained using different experimental apparatus and techniques, agreed well in the regions of overlap.

Carbon foils of thickness 6 $\mu g/cm^2$ were mounted on holders which accurately maintained tilt angles relative to the beam direction ($\alpha$) of 0° to 60° and—in some cases—to 80°. A second degree of freedom allowed the foil holders to be rotated azimuthally about the beam direction through an angle $\phi$. $He^+$ beams accelerated to the required energy[10] were collimated and allowed to traverse the foil. Radiation from the desired neutral helium levels emitted at right angles to the beam was selected by an optical system including a monochromator or a narrow-band interference filter centered at, in the one case, 5016 Å to select the $2s\ ^1S$-$3p\ ^1P$ transition and, in the other case, at 4922 Å to isolate the $2p\ ^1P$-$4d\ ^1D$ transition. The light so selected traversed a polarimeter and was detected by a low-noise photomultiplier tube operating in the single photon mode. Normalization was provided by a second phototube counting photons collected by an optical fibre bundle at a fixed distance from the foil or by the total charge collected in a Faraday cup downstream of the foil.

Two different polarimeters were employed. In one, the analyzer consisted of a rotatable polaroid[1] and the polarization parameters (see below) were obtained by measuring the detected intensity as a function of the polaroid angle; to complete

 © 1980 The American Physical Society

the determination of the polarization, these measurements were repeated with a quarter-wave retarding plate preceding the system. In the second polarimeter, a Glan-Thompson prism of fixed orientation was placed in front of the photodetector and a rotatable phase plate (of approximately $\frac{1}{4}$ wave retardance) was used as the analyzer.[11] In either case, operation of the polarimeter was stepping motor controlled, data acquisition was automated, and the data were immediately reduced by computer.

## III. PHENOMENOLOGY

The radiation emitted by a fast ion beam traversing a tilted foil is, in general, partially elliptically polarized and a complete specification of its polarization state requires measurement of the four Stokes parameters $I$, $M$, $C$, and $S$. If the absolute intensity is not to be determined, however, only the three relative Stokes parameters $M/I$, $C/I$, and $S/I$ need be specified. The density matrix $\rho$ which describes the ensemble of radiating levels in the present experiments can be expanded in terms of a basis set of spherical tensors and the polarization and radiation pattern of the decay transition observed is—in the field free case—completely determined by the four expansion coefficients $\rho_0^2$, $\rho_1^2$, $\rho_2^2$, and $\rho_1^1$ which describe the radiating levels.[12] Alternatively, an equivalent set of four parameters with a direct physical interpretation has been introduced by Fano and Macek[13]: the three alignment parameters

$$\begin{aligned} A_0^c &= \langle 3L_z^2 - L^2\rangle / L(L+1), \\ A_1^c &= \langle L_x L_z + L_z L_x\rangle / L(L+1), \\ A_2^c &= \langle L_x^2 - L_y^2\rangle / L(L+1), \end{aligned} \tag{1}$$

and the orientation

$$O_1^c = \langle L_y\rangle / L(L+1),$$

where the $z$ axis is chosen parallel to the beam and the $y$ axis is perpendicular to both the beam and the normal to the inclined foil; the $\rho_q^k$'s and the alignment and orientation parameters are simply proportional one to the other:

$$\begin{aligned} \rho_0^2 &= [10K/(2L-1)^{1/2}(2L+3)^{1/2}]A_0^c, \\ \rho_1^2 &= [5\sqrt{6}\,iK/(2L-1)^{1/2}(2L+3)^{1/2}]A_1^c, \\ \rho_2^2 &= [-5\sqrt{6}\,K/(2L-1)^{1/2}(2L+3)^{1/2}]A_2^c, \\ \rho_1^1 &= -(3\sqrt{2}\,K)O_1^c, \end{aligned} \tag{2}$$

with

$$K = \frac{[L(L+1)]^{1/2}}{2(2S+1)(2L+1)^{1/2}}.$$

The connection between the relative Stokes parameters measured in this experiment for radiation emitted at right angles to the beam and the parameters described above which specify the radiating state can, for the singlet levels studied here, be written as

$$\begin{aligned} M/I &= -\tfrac{3}{4}R(1+F)^{-1}(A_0^c + A_2^c\cos 2\phi), \\ C/I &= -\tfrac{3}{2}R(1+F)^{-1}(A_1^c\sin\phi), \\ S/I &= -\tfrac{3}{4}(1+F)^{-1}[L(L+1) - L_f(L_f+1) + 2] \\ &\quad \times (O_1^c\sin\phi), \end{aligned} \tag{3}$$

where $L$ denotes the orbital angular momentum of the radiating level, $L_f$ denotes the orbital angular momentum of the final level,

$$R = \begin{Bmatrix} L_f & L & 1 \\ 2 & 1 & L \end{Bmatrix} \Big/ \begin{Bmatrix} L & L & 1 \\ 2 & 1 & L \end{Bmatrix},$$

and

$$F = \tfrac{1}{4}R(-A_0^c + 3A_2^c\cos 2\phi).$$

Thus, measurement of the relative Stokes parameters for two different azimuthal angles of observation suffices to determine the accessible $\rho_q^k$'s or equivalent Fano-Macek parameters. In practice, for all measurements to be described here, $|F| < 0.1$ and, as a first approximation, $C/I$ is directly proportional to $A_1^c$ and $S/I$ provides a direct measurement of the orientation $O_1^c$. In this work, we report results for all four parameters as a function of both foil tip angles, $\alpha$, and the incident beam energy $E$. Since previous work[14] has shown that the excitation can also depend upon beam current density $j$, these experiments were all carried out with $j = 8 \pm 2$ $\mu A/cm^2$.

## IV. RESULTS

Previous communications have reported the dependence of the polarization of the light emitted in one or the other of the transitions studied here but at isolated energies[15-18] or the dependence of the polarization upon energy at isolated angles.[14,19] The present communication represents the first systematic complete specification of the excitation in terms of alignment and orientation parameters as a function of both tilt angle and incident ion energy.

Figure 1 shows typical results at selected energies for the measured Stokes parameters as a function of tilt angle for the transitions ($2s\,^1S$-$3p\,^1P$) at 5016 Å and ($2p\,^1P$-$4d\,^1D$) at 4922 Å, respectively. Measurements were carried out at intervals of approximately 20 keV in the energy range below 100 keV and of 50 keV at energies

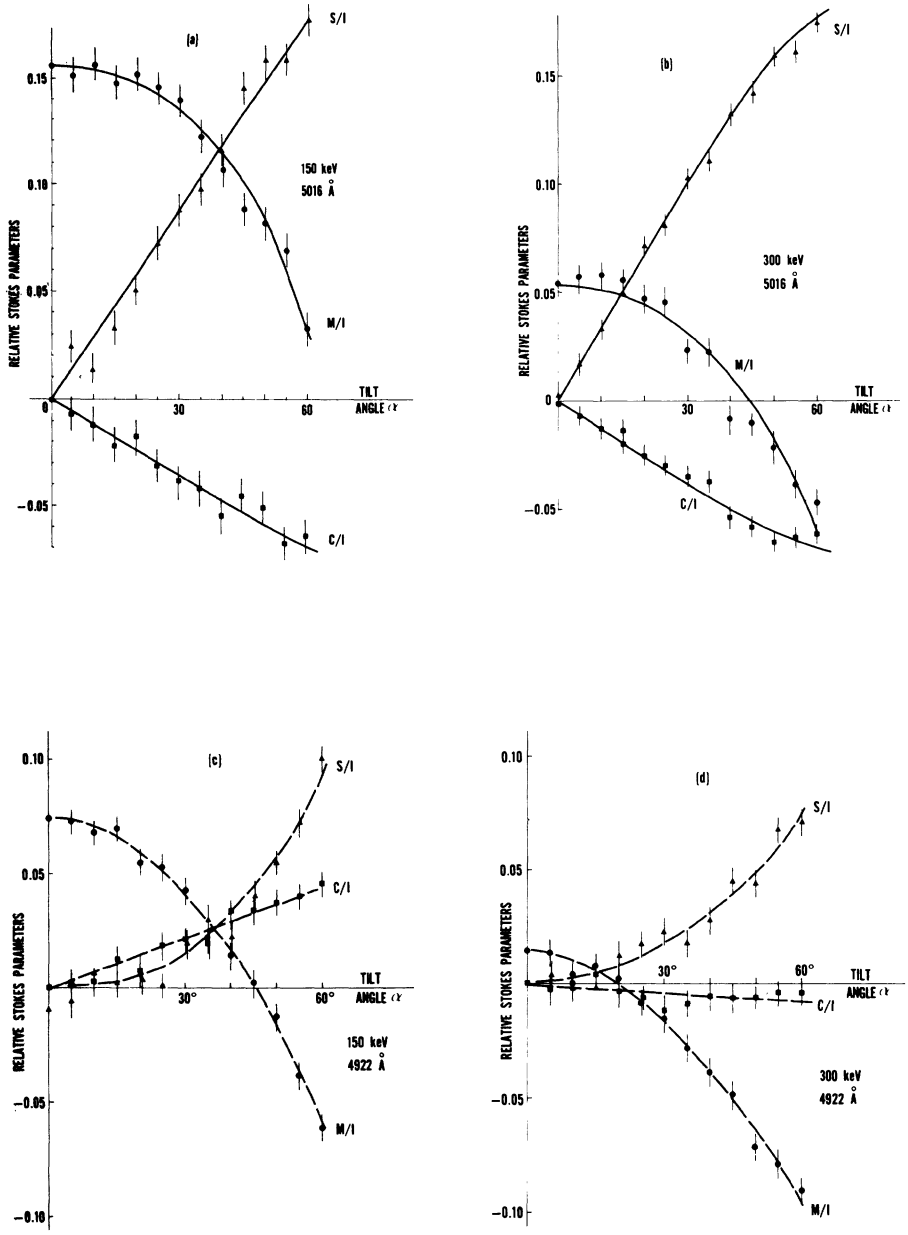


FIG. 1. Typical measurement of the dependence of the relative Stokes parameters upon foil tilt angle at selected energies. (a) $2s\,^1S$–$3p\,^1P$ (5016 Å) at 150 keV, (b) $2s\,^1S$–$3p\,^1P$ (5016 Å) at 300 keV, (c) $2p\,^1P$–$4d\,^1D$ (4922 Å) at 150 keV, (d) $2p\,^1P$–$4d\,^1D$ (4922 Å) at 300 keV. ● $M/I$, ■ $C/I$, ▲ $S/I$. Solid curve: fit to model of Band (Ref. 8); dashed curve: polynomial fit.

above 100 keV. Tilt angles were generally studied in increments of 5°. The data so obtained were simultaneously smoothed in energy and angle and Figs. 2 and 3 display the variation of the relative Stokes parameters over a wide range of energy and angle. Throughout most of the energy range, the statistical uncertainty in the individual measurements is $\leq 0.005$, rising to 0.007 at the highest energies where the fraction of neutral helium in the outgoing beam is rather small. Because of the averaging employed, uncertainties in the smoothed curves shown are less than half as large. As suggested in Sec. III, the measurement of $C/I$ and $S/I$ specify—to better than 10%—$A_1^c$ and $O_1^c$, respectively, and these curves have been so labeled. Measurements of $M/I$ have been carried out at selected tilt angles $\alpha$ as a function of energy for $\phi = 0$ and $\pm\frac{1}{2}\pi$. The values of $A_0$ and $A_2$ resulting from these measurements are shown in Figs. 4 and 5.

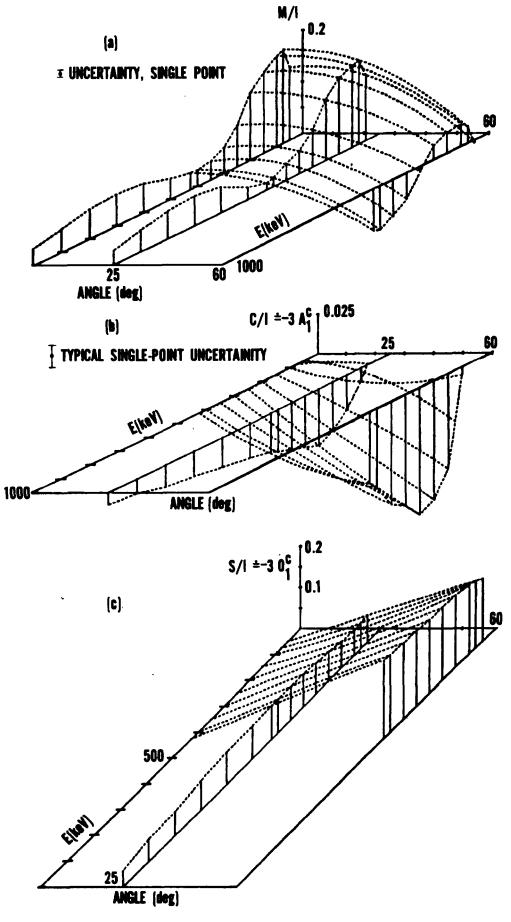


FIG. 2. Relative Stokes parameters for the transition $2s^1S$–$3p^1P$ at 5016 Å as a function of energy and angle. (a) $M/I$, (b) $C/I \doteq -3\,A_1^c$, (c) $S/I \doteq -3\,O_1^c$.

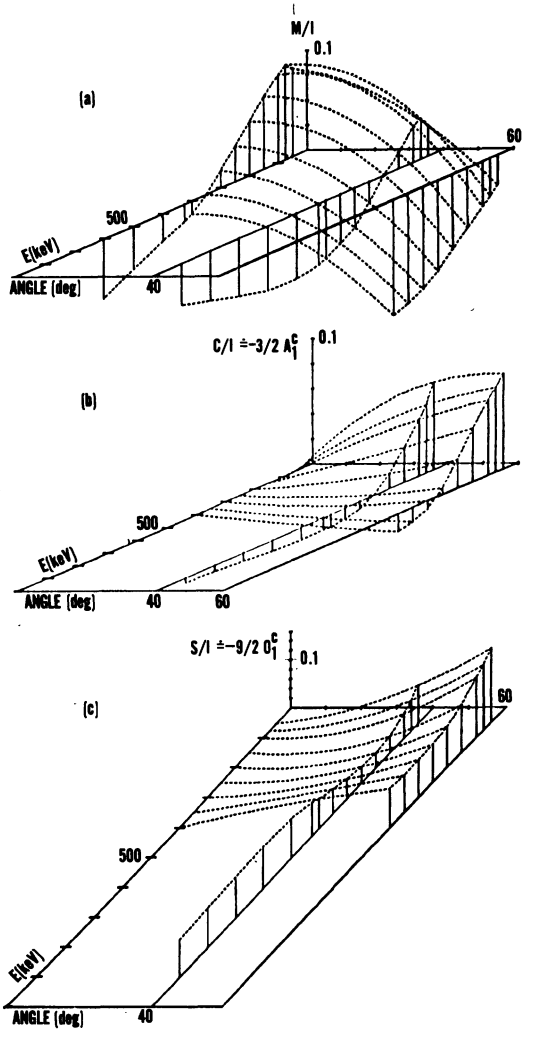


FIG. 3. Relative Stokes parameters for the transition $2p^1P$–$4d^1D$ at 4922 Å as a function of energy and angle. (a) $M/I$, (b) $C/I \doteq -\frac{3}{2}A_1^c$, (c) $S/I \doteq -\frac{9}{2}\,O_1^c$.

## V. DISCUSSION

The general aim of these studies is to gather information which will ultimately allow one to construct a physical model of the ion-foil interaction process. Among the mechanisms which must be considered in this regard are excitation by the bulk, electron capture—both of bound foil electrons and of emitted secondary electrons—and interaction with the surface itself and with surface electric fields.

Inspection of Fig. 4(a) shows a number of interesting features: The alignment parameter $A_0^c$ describing the $3p\,^1P$ level is negative over a very wide range of energies and foil tilt angles; it displays significant structure with a pronounced peak near 120 keV and a broader, more poorly defined, maximum at higher energy; and it is essentially identical at tilt angles of 0° and 45° over a very wide span of energies. The sign of $A_0^c$ is that which is predicted by Ellis,[20] using a simple electron pick-up model where an ion emerging from the foil captures an electron whose velocity relative to the foil is small compared with that of the ion itself. The fact that the details of the structure do not change significantly with tilt angle is also consistent with this same model, since the principal axis for the alignment is determined by the beam velocity vector. Of course, alignment produced in the bulk would also be expected to be angle independent. It should be noted, however, that this dependence of $A_0^c$ upon angle (as well as the angular dependence of the other alignment components discussed below) is *not* what results if it is assumed that the alignment produced simply rotates with the foil normal, as might be expected if *only* a surface field were involved.

Comparison of these observations with the re-

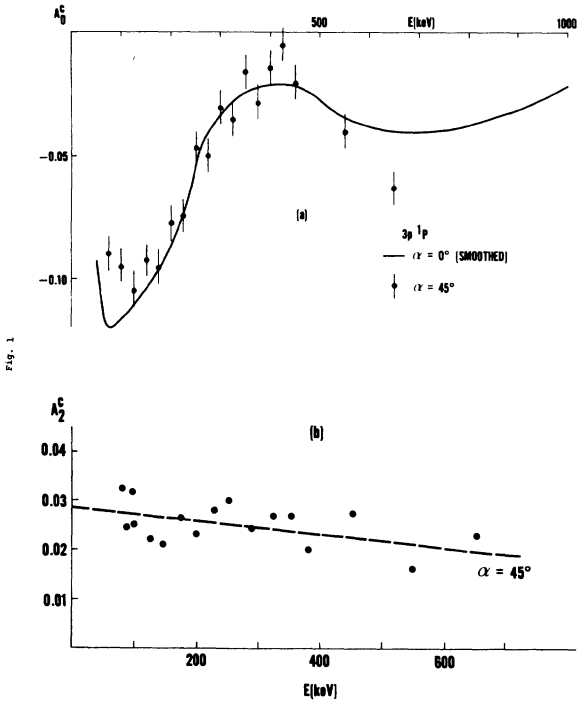


FIG. 4. Alignment parameters for $3p\,^1P$. (a) $A_0$, (b) $A_2$.

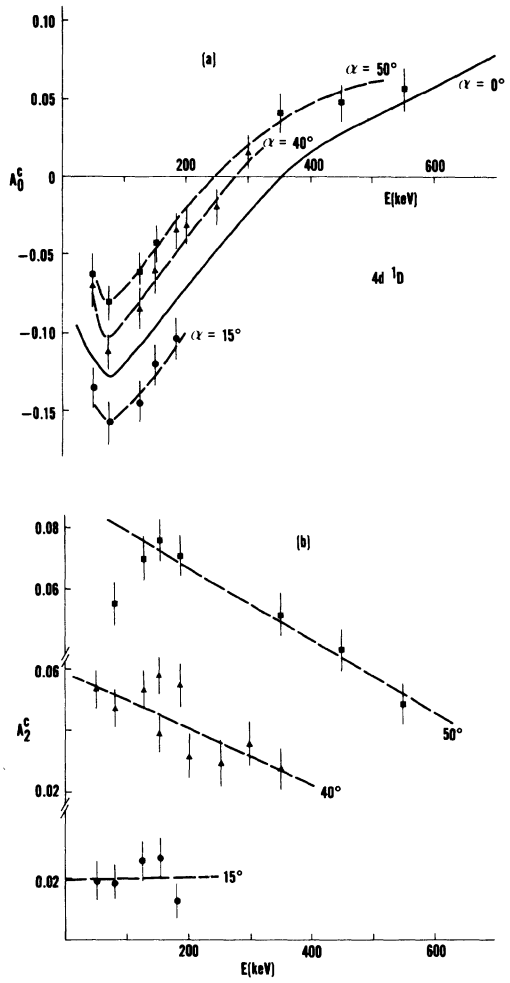


FIG. 5. Alignment parameters for $4d\,^1D$. (a) $A_0$, (b) $A_2$.

sults for the $4d\,^1D$ level of Fig. 5(a) shows a number of similarities as well as some differences. First, one notes that the sign of $A_0^c$ is again generally negative; however—unlike the previous case—it does change sign at higher energies. Second, the dominant feature of the data is again a low energy peak—here at somewhat lower energy (~80 keV). And third, one notes that the structural features of $A_0^c(E)$ are again remarkably similar at all angles studied. Unlike the results for $3p\,^1P$ the values of $A_0^c$ do depend somewhat upon angle; within the accuracy of the present measurements, however, the results can be represented by the superposition of a single energy dependent function $A_0^c(E, 0°)$ and an energy independent part which varies slowly with angle.

Figures 2(c) and 3(c) show the variation with angle and energy of the orientation parameter $O_1^c$. In both cases, and at all energies and angle, $O_1^c$ is negative, indicating negative helicity. For the geometry of the current experiment, this corresponds to orientation in the direction $\vec{n}\times\vec{v}$, the same direction as measured in all experiments to date as well as that observed in surface scattering measurements.[21] Again this is the direction predicted by the simple electron-capture model described earlier if it is assumed that the captured electrons are distributed with a gradient along the foil normal.[22] For the $3p\,^1P$ level, the orientation is observed to increase in a nearly linear fashion with angle out to 60° at all energies studied; at a given angle, the orientation varies slowly with energy, displaying a broad peak at moderate energy (400 keV). The $4d\,^1D$ level displays an orientation which is, at low energy, quadratic in angle—becoming more nearly linear as the energy rises; at a given angle, the orientation of this level shows a broad dip at about 200 keV.

The other two alignment parameters $A_1^c$ and $A_2^c$ are somewhat less well determined, and vary slowly with energy and angle. Aside from the fact that their nonzero values indicate the presence of a surface component to the reaction, no striking features or regularities emerge. For $3p\,^1P$, $A_1^c$ is small, negative and—except perhaps at 50 keV—a linearly increasing function of angle; for $4d\,^1D$, $A_1^c$ is somewhat larger, positive and again—except perhaps at 50 keV—a linear func-

tion of $\alpha$; it becomes very small and negative only at high velocities. $A_2^c$ is in both cases positive, decreases monotonically with increasing energy and is—again except perhaps at the lowest energies studied—a quadratic function of the tilt angle $\alpha$.

The earliest attempts at understanding the variation of the relative Stokes parameters such as is shown in Figs. 1–3 are based upon Eck's postulate of a strong surface electric field,[3] which mixes states aligned along the beam axis through the quadratic Stark effect. It soon becomes apparent that the model is unable to explain in detail the measured angular dependences of these parameters. For example, the model of Eck predicted $S/I$ to be approximately proportional to $\sin 2\alpha$ and $C/I$ to be approximately proportional to $\sin 4\alpha$ while the data shown here in Fig. 2 and Fig. 3 are inconsistent with these projections; moreover, this model predicted the total polarization

$$f_p = [(M/I)^2 + (C/I)^2 + (S/I)^2]^{1/2}$$

to remain constant with tilt angle, in disagreement with subsequent measurements.[15] Lombardi[4] has suggested invoking the possibility of initial states which are coherent combinations of close-lying opposite parity levels with the consequent possibility of the occurrence of linear Stark mixing. In his paper, the results for the simplified case of $s$-$p$ mixing only are displayed, and are already quite complex—containing nine free parameters. When the even more probable $p$-$d$ mixing is included, it seems likely that the results obtained would—as Lombardi suggests—be sufficiently general to fit almost any measured data.[23] Band[5] explored the role of the surface discontinuity in exciting electrons of the incident ion; when effects of this mechanism—computed in Born approximation—are combined with the effect of the surface field postulated by Eck, expressions for the relative Stokes parameters result which allow $f_p$ to vary with angle. When examined in detail, however, they remain incapable of even approximately fitting the results shown in Figs. 2 and 3. Lewis and Silver[7] generalized the surface field model of Eck to include the possibility of an "initial" alignment at an angle to the beam when the foil is tilted. It is then possible to obtain much improved fits to the data by tailoring the variation of the alignment angle with foil tilt angle to the individual measurements. In particular, the $3p\,^1P$ results of Fig. 2 require an initial alignment roughly halfway between the beam axis and foil normal while the qualitatively different $4d\,^1D$ results of Fig. 3 require an initial alignment which lies closer to the foil normal for small tilt angles and then moves back toward the beam axis as the tilt angle increases—a behavior somewhat difficult to explain. Herman[6] pointed out geometric considerations which could give rise to orientation and derived expressions for the relative Stokes parameters which are qualitatively reasonable, but which cannot quantitatively fit the data in Figs. 2 and 3: In particular his predicted $\tan(\alpha)$ dependence for $S/I$ rises much more steeply at large angles than do the results shown in Fig. 2(c). For small angles it, like most of the other calculations discussed, does agree with our measurements. Schröder and Kupfer[9] attempted to explain the measurements based upon electron pick-up from a distribution symmetric about the foil normal, using the Born approximation approach of Trubinkov and Yablinskii[24] to obtain expressions valid for incident hydrogen ions of high velocity. Quantitative agreement does not obtain, even at small tilt angles, especially with respect to absolute magnitudes and the angular variation of $M/I$. In summary, all of the theoretical models suggested to date are successful in explaining some feature of the experimental observations, but they are generally unable to reproduce all of the data shown in Figs. 1–3. Of these calculations, one of the most general is that of Band[5] which to some extent includes quadratic Stark effects of the sort suggested in Ref. 4, and we also compare our results with those calculations. All of our measurements for the $2s\,^1S$-$3p\,^1P$ transition can be well represented by this model as shown in the selected data of Figs. 1(a) and 1(b), where the measured values of $M/I$, $C/I$, and $S/I$ versus $\alpha$ at 150 and 300 keV were fit by the 5-parameter model of Ref. 5 (the equations therein invoke 6 parameters; one of these is, however, redundant). The solid curves show the results of a simultaneous nonlinear least-squares fit to all the data at each energy and provide a very acceptable fit to the measurements. However, the situation is quite different for $4d\,^1D$. The model of Band predicts that $A_1^c(\alpha)$ is proportional to $O_1^c(\alpha)$ and inspection of Figs. 3(b) and 3(c) shows that this is clearly not so for most energies. The dashed curves in Fig. 1(c) and Fig. 1(d) are least-squares polynomial fits and the very different behavior of $S/I$ and $C/I$ is also apparent there. At both energies $S/I$ is proportional to $\alpha^2$; $C/I$ is consistent with a linear dependence upon $\alpha$. For both transitions studied $M/I$ behaves like $(a - b\alpha^2)$; coupled with the small angular variation of $A_0^c$ shown in Figs. 4 and 5, this suggests an $\alpha^2$ dependence for $A_2^c$. In searching for the cause of this inability of the Band model to reproduce the data, one may note that it employs a power expansion in terms of $V_0 a/\cos\alpha$ and hypothesize that the larger size of the $4d$ state

causes an earlier breakdown of that approximation. On the other hand, the model also neglects the possibility of orientation produced by electron capture and the failure of the model may indicate an important role for this process.

Additional information concerning the excitation process is provided by the demonstration that the dependence of the produced alignment upon current density[14] is due to changes in temperature of the foil.[25] Since it is known that secondary electron emission decreases with increasing foil temperature[25,26] (here current density), it is probable that the free electron density at the surface plays a significant role in the excitation mechanism. The flux of secondary electrons is certainly asymmetric with respect to the particle track in the tilted-foil case. The reason for this is shown in Fig. 6. Secondaries, in traveling from their point of origin to the surface, lose energy through inelastic collisions with target atoms. If this energy loss is severe enough, they will be unable to surmount the surface dipole potential and escape. The probability of escape has been shown to be[26]

$$P(S) = A \exp(-S/L_f), \tag{4}$$

where $A$ is a constant which depends upon foil material, $S$ is the distance from the surface at which the secondary is produced, and $L_f$ is the "escape depth" typically 2–3 times the mean-free path for slow electrons in the solid. As can be seen from the figure, electrons which initially have components of velocity in the positive $\hat{x}$ direction (i.e., with a component toward the foil interior) will escape less frequently than those with negative $\hat{x}$ components. Since these electrons surround the ion as it emerges from the surface,[25] the electric fields it experiences can be quite anisotropic. We have shown in other work[25,27] that the secondaries themselves are not

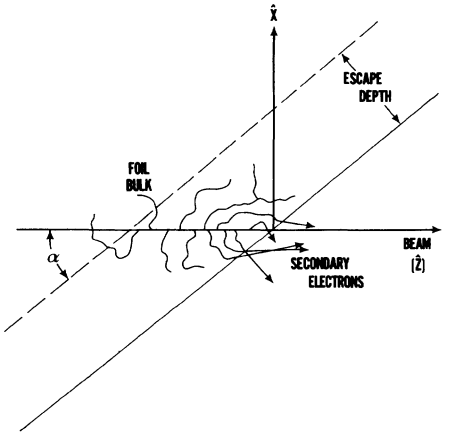


FIG. 6. Secondary electron escape geometry.

being picked up. However, the fields they produce at the surface can certainly have a profound effect on the target electron pickup process. Preliminary indications suggest that alignment produced by other mechanisms—e.g., bulk excitation—is reduced by the temperature dependent effect since the magnitude of the current dependence seems nearly proportional to the alignment itself (compare, for example, Figs. 2 and 3 in Ref. 14). However, the simple prediction of unaligned atoms by secondary electron effects cannot explain the change of sign of the alignment observed for high energies and low currents shown, e.g., in Fig. 3(a).

It is also instructive to compare these tilted-foil measurements with measurements of the polarization produced by grazing collisions from solid surfaces, where very high values of the orientation ($S/I \sim 0.6$) are observed.[21] This is especially so since the two processes have in common some, but not all, of the interactions discussed above. For example, electron pickup at or near the surface occurs in both cases and—in each case—the neutralized ion traverses at an angle any existing surface field. On the other hand, successive electron capture-loss processes in the bulk would occur only in the foil transmission experiments, and the importance of collisions occurring following neutralization might be expected to be much less in the grazing collision work; secondary electron production might also differ in the two cases. Direct comparison of the two experiments is complicated by the fact that most surface collision experiments have been carried out only within a few degrees of grazing and the analogous foil transmission measurements would be for tilt angles exceeding 85° where experimental problems become nearly prohibitive. Results of surface scattering at somewhat less grazing angles show only a slow decrease in orientation as the tilt angle decreases to 70°.[21] Consequently, at present, one must confine the comparison with observing the approach of the tilted-foil measurements to 90°. Unfortunately, the existing foil data in this region is rather fragmentary and, to some extent, not completely consistent. In addition, the observed Stokes parameters are very sensitive to the condition of the surface, requiring experiments carried out under ultrahigh vacuum UHV conditions for quantitative comparison. Measurements at isolated energies for disparate transitions by Brooks and Pinnington,[17] Pedrazinni *et al.*,[18] Burns, Hight and Greene[28] and Brooks[29] seem to obtain values of $S/I$ which tend to level off at moderate values of 0.15–0.25 for high tilt angles, although isolated instances of a dramatic decrease of $S/I$ at high

angles have also been reported.[18,28] This decrease—if confirmed—is somewhat troubling in attempting to correlate the two processes. The fact that considerably smaller values of $S/I$ are obtained as limiting cases of the foil measurements is less troubling since it is likely due to surface-dependent phenomena; earlier measurements of $S/I$ from grazing collisions with Cu surfaces[21] showed a similar decrease in the values of $S/I$ measured when the Cu surface acquired a hydrocarbon contamination layer. Tolk *et al.*[21] also find for keV energy protons incident upon both polycrystalline Pb and single crystal Ni targets under UHV conditions that $M/I$ essentially vanishes. This does *not* seem to be a limiting property of any of the large tilt-angle foil experiments. However, Tolk *et al.* find their observations well represented by a variation of the model of Eck[3] where—instead of initially aligned atoms—it is postulated that an initially completely oriented beam is produced by the electron capture mechanism discussed earlier[20,22] and that the observed polarization (particularly, the absence of $M/I$) is due to evolution of Stark-mixed states in a surface electric field. The nonvanishing of $M/I$ in the foil experiments likely points to a role for collision phenomena—absent in the grazing collision case—and/or processes involving secondary electrons as important mechanisms in producing the observed alignment.

It is clear that, while the results presented here are suggestive of contributions due to electron pickup and effects due to secondary electrons as well as of possible bulk effects, additional work remains to be done to completely elucidate the detailed nature of the interaction. A more complete Stark-mixing calculation is required and measurements of the alignment and orientation of the $3d\,^1D$ level of He$I$—which lie very close to the $3p\,^1P$ level—need to be performed. Secondly, measurements of the dependence of alignment and orientation upon the nature of the exciting surface—which must be carried out under ultrahigh vacuum conditions—can shed additional light on the excitation mechanism. We are at present undertaking investigations in both of these areas.

## ACKNOWLEDGMENTS

The authors would like to acknowledge the valuable assistance of a number of colleagues in various aspects of this research. In particular we wish to thank D. G. Ellis, G. Gabrielse, S. Huldt, and A. E. Livingston for their contributions. This work was supported in part by the U. S. National Science Foundation and the Division of Basic Energy Sciences, U. S. Department of Energy.

---

*Thin Film Division, Dale Electronics, Norfolk, Nebraska.

†Long Range Research Division, Exxon Production Research Corporation, Houston, Texas.

[1]R. M. Schectman, L. J. Curtis, and H. G. Berry, J. Phys. (Paris) C-1, 289 (1979) and references contained therein.

[2]H. G. Berry, L. J. Curtis, D. G. Ellis, and R. M. Schectman, Phys. Rev. Lett. 32, 751 (1974).

[3]T. G. Eck, Phys. Rev. Lett. 33, 1055 (1974).

[4]M. Lombardi, Phys. Rev. Lett. 35, 1172 (1975).

[5]Y. Band, Phys. Rev. Lett. 35, 1272 (1975).

[6]R. Herman, Phys. Rev. Lett. 35, 1626 (1975).

[7]E. J. Lewis and J. D. Silver, J. Phys. B 8, 2697 (1975).

[8]Y. Band, Phys. Rev. A 13, 2061 (1976).

[9]H. Schröder and E. Kupfer, Z. Phys. A 279, 13 (1976).

[10]It should be noted that the *outgoing* ion energy is expected to be the relevant parameter and this changes somewhat as the foil is tilted. For angles to 60° the change amounts to 1–10 keV, depending upon beam energy. Since the relative Stokes parameters vary only slowly with energy (see Figs. 2 and 3), no correction was made for measurements at angles less than 60°. For larger tilt angles, the accelerator terminal voltage was adjusted to maintain the outgoing ion velocity constant.

[11]H. G. Berry, G. Gabrielse, and A. E. Livingston, Appl. Opt. 16, 3200 (1977).

[12]D. G. Ellis, J. Opt. Soc. Am. 63, 1322 (1973).

[13]U. Fano and J. H. Macek, Rev. Mod. Phys. 45, 553 (1973).

[14]R. D. Hight, R. M. Schectman, H. G. Berry, G. Gabrielse, and T. Gay, Phys. Rev. A 16, 1805 (1977).

[15]H. G. Berry, L. J. Curtis, D. G. Ellis, and R. M. Schectman, Phys. Rev. Lett. 35, 274 (1975).

[16]D. A. Church, M. C. Michel, and W. Kolbe, Phys. Rev. Lett. 14, 1140 (1975).

[17]R. L. Brooks and E. H. Pinnington, Phys. Rev. A 18, 1454 (1978) and J. Phys. (Paris) Colloq. C1, 295 (1979).

[18]G. J. Pedrazzini, P. G. Christiansen, J. E. Ross, R. B. Gardiner, and C. H. Liu, J. Phys. B 11, 3939 (1978).

[19]H. G. Berry, S. N. Bhardwaj, L. J. Curtis, and R. M. Schectman, Phys. Lett. 50A, 59 (1974).

[20]D. G. Ellis, J. Phys. (Paris) Colloq. C1, 152 (1979).

[21]H. G. Andrä, R. Fröhling, H. J. Plöhn, and J. D. Silver, Phys. Rev. Lett. 37, 18 (1976); H. G. Berry, G. Gabrielse, A. E. Livingston, R. M. Schectman, and J. Desequelles, *ibid.* 38, 1473 (1977); H. G. Berry, G. Gabrielse, and A. E. Livingston, Phys. Rev. A 16, 1915 (1977); N. H. Tolk, J. C. Tully, J. S. Kraus, W. Heiland, and S. H. Neff, Phys. Rev. Lett. 41, 643 (1978); 42, 1475 (1979).

[22]H. Schröder, Z. Phys. A 284, 125 (1978).

[23]See, e.g., the comparison in H. G. Berry, L. J. Curtis, D. G. Ellis, R. D. Hight, and R. M. Schectman,

*Beam Foil Spectroscopy*, edited by Ivan A. Sellin and David J. Pegg (Plenum, New York, 1976), p. 755.

[24]B. A. Trubnikov and Y. N. Yablinskii, Zh. Eksp. Teor. Fiz. 52, 1638 (1967) [Sov. Phys.—JETP 25, 1089 (1967)].

[25]T. J. Gay and H. G. Berry, Phys. Rev. A 19, 952 (1979).

[26]E. J. Sternglass, Phys. Rev. 108, 1 (1957).

[27]T. J. Gay and H. G. Berry, in Physics with Fast Molecular Ion Beams, edited by D. S. Gemmell, ANL/PHY-79-3, p. 279-285.

[28]Donal J. Burns, Ralph D. Hight, and Chris H. Greene, Phys. Rev. A 20, 1468 (1979).

[29]Robert L. Brooks, Ph.D. thesis, University of Alberta, 1979 (unpublished).