University of Nebraska - Lincoln
DigitalCommons@University of Nebraska - Lincoln

Calculus-Based General Physics | Instructional Materials in Physics and Astronomy

1-1-1975

DIFFRACTION

Follow this and additional works at: http://digitalcommons.unl.edu/calculusbasedphysics

Part of the Other Physics Commons

"DIFFRACTION" (1975). *Calculus-Based General Physics.* Paper 9.
http://digitalcommons.unl.edu/calculusbasedphysics/9

This Article is brought to you for free and open access by the Instructional Materials in Physics and Astronomy at DigitalCommons@University of Nebraska - Lincoln. It has been accepted for inclusion in Calculus-Based General Physics by an authorized administrator of DigitalCommons@University of Nebraska - Lincoln.

DIFFRACTION

INTRODUCTION

Have you ever wondered why you can hear around corners, but cannot see around them? You know that light and sound are waves, and should therefore share the same basic properties. Why then do they seem so different in the property of their "shadows"?

In this module you will learn that light does exhibit all the bending properties of sound and water waves. The effect, however, depends on the size of the obstacle compared to the wavelength. It is only the largeness of everyday obstacles compared to the very small wavelength of light that deemphasizes the bending, or diffraction, of light. In this module we shall use very small obstacles and windows in order to make the diffraction effect most apparent to you.

PREREQUISITES

Before you begin this module, you should be able to:	Location of Prerequisite Content
*Explain interference of light in terms of the properties of waves (needed for Objectives 1 through 4 of this module)	Interference Module
*Give the source and wavelength of some common electromagnetic waves (needed for Objectives 1 through 4 of this module)	Wave Properties of Light Module

LEARNING OBJECTIVES

After you have mastered the content of this module, you will be able to:

1. Huygens' principle - Use Huygens' principle to explain how light from a single slit can produce interference fringes.

2. Fraunhofer diffraction - (a) State the optical conditions necessary to produce Fraunhofer diffraction through a single slit. (b) Use the equation for the diffraction intensity pattern from single-slit Fraunhofer diffraction to solve for the intensity, the position of various intensities, the size of the single slit, or the wavelength of the wave.

3. Resolving power - (a) Describe the conditions for which two objects viewed through a slit or circular aperture are just resolved. (b) Solve for the

separation, distance, or the wavelength emitted by two objects that are just resolved; or solve for the smallest orifice through which they can be identified as two objects.

4. Diffraction grating - Solve diffraction-grating problems that ask for the position of the principal (or most intense) maxima, the order number, the wavelength of the light, or the optical construction of the diffraction grating.

TEXT: Frederick J. Bueche, Introduction to Physics for Scientists and Engineers (McGraw-Hill, New York, 1975), second edition

SUGGESTED STUDY PROCEDURE

Read General Comments 1 and 2 in this study guide, and Section 32.1 of Chapter 32. Then study Problem A. Next read Sections 32.2 through 32.4 and study Illustration 32.1 and Problem B, before working Problems E and F. Read Section 32.5 and study Problem C; work Problem G. Then read Sections 32.6 and 32.7, study Problem D, and work Problems H and I.

Take the Practice Test, and work some Additional Problems if necessary, before trying a Mastery Test.

BUECHE

Objective	Readings	Problems with Solutions		Assigned Problems	Additional Problems
		Study Guide	Text	Study Guide	(Chap. 32)
1	General Comments 1, 2, Sec. 32.1	A			Quest.[a] 1
2	Secs. 32.1 to 32.4	B	Illus.[a] 32.1	E, F	Quest. 4, 7, Probs. 1 to 8, 10
3	Sec. 32.5	C		G	Quest. 9, Prob. 9
4	Sec. 32.7	D		H, I	Quest. 2, 3, Probs. 14 to 16, 19, 21

[a]Illus. = Illustration(s). Quest. = Question(s).

TEXT: David Halliday and Robert Resnick, Fundamentals of Physics (Wiley, New York, 1970; revised printing, 1974)

SUGGESTED STUDY PROCEDURE

Read General Comments 1 and 2 in this study guide, and Section 38-1 in Chapter 38. Then study Problem A. Read Sections 38-2 through 38-4 and study Problem B and Examples 1 to 3, before working Problems E and F. Read Section 38-5, study Problem C and Example 4, and work Problem G. Then read Sections 38-6 through 38-9, study Problem D and Example 7, and work Problems H and I.

Take the Practice Test, and work some Additional Problems if necessary, before trying a Mastery Test.

HALLIDAY AND RESNICK

Objective Number	Readings	Problems with Solutions		Assigned Problems	Additional Problems
		Study Guide	Text	Study Guide	(Chap. 38)
1	General Comments 1, 2, Sec. 38-1	A			
2	Secs. 38-1 to 38-4	B	Ex.[a] 1, 2, 3	E, F	Quest.[a] 1 to 6, Probs. 1 to 4, 6, 7
3	Sec. 38-5	C	Ex. 4	G	Probs. 10 to 15
4	Secs. 38-7 to 38-9	D	Ex. 7	H, I	Quest. 14, 15, 17, Probs. 30 to 36

[a]Ex. = Example(s). Quest. = Question(s).

TEXT: Francis Weston Sears and Mark W. Zemansky, University Physics (Addison-Wesley, Reading, Mass., 1970), fourth edition

SUGGESTED STUDY PROCEDURE

Read General Comments 1 and 2 in this study guide, and Section 41-10 in Chapter 41. Then study Problem A. Next read Section 41-11, study Problem B, and work Problems E and F. Read Sections 41-12 and 41-13, and study Problem D and Examples 1 and 2. Then read Section 41-14 and study Problem C. Work Problems G through I.

Take the Practice Test, and work some Additional Problems if necessary, before trying a Mastery Test.

SEARS AND ZEMANSKY

Objective Number	Readings	Problems with Solutions		Assigned Problems	Additional Problems
		Study Guide	Text	Study Guide	
1	General Comments 1, 2, Sec. 41-10	A			
2	Secs. 41-10, 41-11	B		E, F	41-15, 41-16, 41-17
3	Sec. 41-14	C		G	41-22, 41-23
4	Secs. 41-12, 41-13	D	Ex.[a] 1, 2 (Sec. 41-12)	H, I	41-18, 41-20, 41-21

[a]Ex. = Example(s).

TEXT: Richard T. Weidner and Robert L. Sells, Elementary Classical Physics (Allyn and Bacon, Boston, 1973), second edition, Vol. 2

SUGGESTED STUDY PROCEDURE

Since your text does not follow the order of the Learning Objectives of this module, you might do well to read Chapter 39 through quickly at first, for an overview, then study the sections according to objective, as given in the Table. Read General Comments 1 and 2 in this study guide. Then read Sections 39-1 through 39-3, study Problems A and B and Example 39-1, before working Problems E and F. Next read Sections 39-4 through 39-7, study Problems C and D and Example 39-2, and work Problems G, H, and I.

Take the Practice Test, and work some Additional Problems if necessary, before attempting a Mastery Test.

WEIDNER AND SELLS

Objective Number	Readings	Problems with Solutions		Assigned Problems	Additional Problems
		Study Guide	Text	Study Guide	
1	General Comments 1, 2, Secs. 39-3, 39-1	A			
2	Secs. 39-3, 39-1, 39-2	B	Ex.[a] 39-1	E, F	39-5, 39-7, 39-8, 39-9
3	Sec. 39-7	C		G	39-14, 39-15, 39-16, 39-17
4	Sec. 39-5	D	Ex. 39-2	H, I	39-19, 39-20

[a]Ex. = Example(s).

GENERAL COMMENTS

1. Huygens' Principle

Huygens' principle describes the motion of a wave moving away from its source by having you visualize that each point on the expanding wavefront is a source of spherical waves of the same wavelength. In Figure 1 are shown two examples of waves coming through different-size windows. The small left-hand window in Figure 1(a) can be thought of as containing only one point, with the spherical wave emanating from it and spreading into the region to the right of the window with equal intensity in all directions.

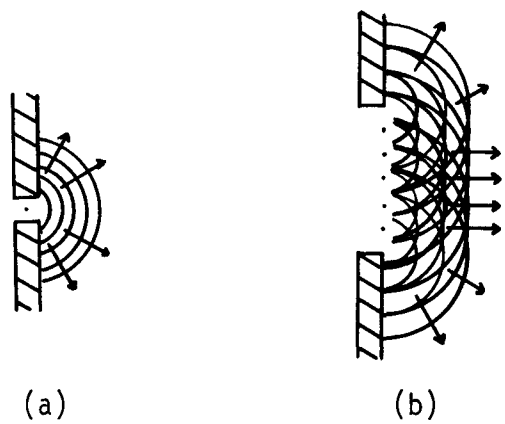

Figure 1

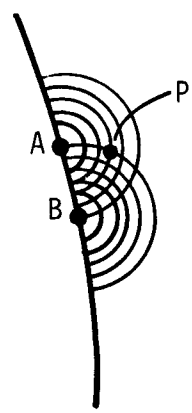

Figure 2

As the window becomes larger, as in Figure 1(b), the transmitted wave becomes more planar and the bending around the edge becomes a less important effect. The many spherical waves produce interference in all directions except that normal to the plane of the windows. This is a qualitative reason why large windows (or obstacles) appear to cast sharp shadows.

2. Interference of Waves

All through the readings in this module you will encounter the light and dark fringes that you have learned to associate with interference of waves. This remains the correct interpretation of these fringes, but now the interfering waves are the spherical waves predicted by Huygens' principle. An example is shown in Figure 2. Two points, A and B, are shown on a wavefront moving to the right. The secondary waves from A and B are also shown. At point P the waves from A and B have different length paths and will interfere. Depending on what the pathlengths to P are for the other secondary waves from the wavefront, you might see a fringe at P.

It is not difficult to realize, though, that for a wavefront containing many points, the conditions for all the secondary waves to interfere in just the right way to produce fringes at P are rare. Your everyday experience agrees with this: except for cases such as when you are looking through an umbrella or at a far-away light, you do not see fringes.

PROBLEM SET WITH SOLUTIONS

A(1). A single slit is illuminated from the left with monochromatic waves, as in Figure 3. Use Huygens' principle to explain how fringes can be seen on the screen. Assume plane waves.

Solution

Pick points A and B on the edge of and midpoint of the slit. Draw some secondary Huygens' waves, as shown in Figure 4. Now that you have the spherical waves you can pick two parallel rays and determine their path difference. A lens is necessary to achieve a focus on the screen. See Figure 5. If $\Gamma = \lambda/2$, the rays will interfere destructively at the screen. Additional pairs of points can be chosen similarly until the slit is full. Each pair will have rays at the same angle as those coming from points A and B, which will also interfere destructively. Thus, point P on the screen will be the location of a dark fringe. The location of the bright fringes is more complicated to determine. Suffice it to say that in between every two dark fringes there must be a light fringe.

Figure 3

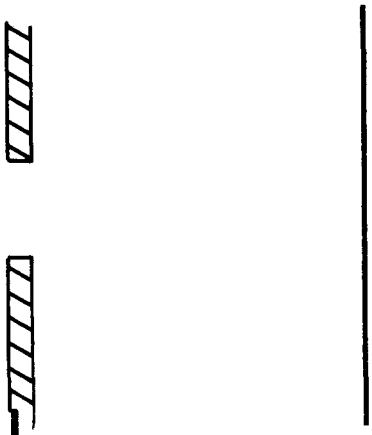

Figure 4

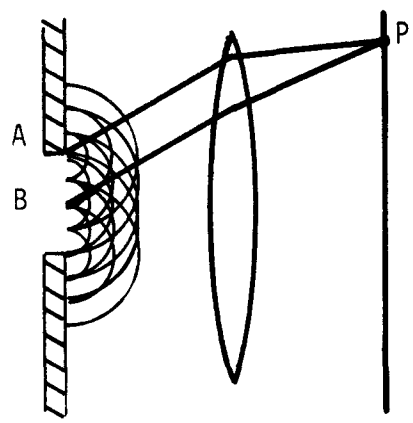

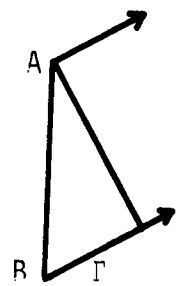

Figure 5

B(2). A thin lens with a 3.00-m focal length is placed directly to the right of a 0.60-mm-wide single slit. The slit is illuminated from the left with 500-nm-wavelength light. The intensity at the central maximum is 12.0×10^{-6} W/m^2. Assume Fraunhofer diffraction, and find the intensity 2.00×10^{-3} m to the side of the central maximum.

Figure 6

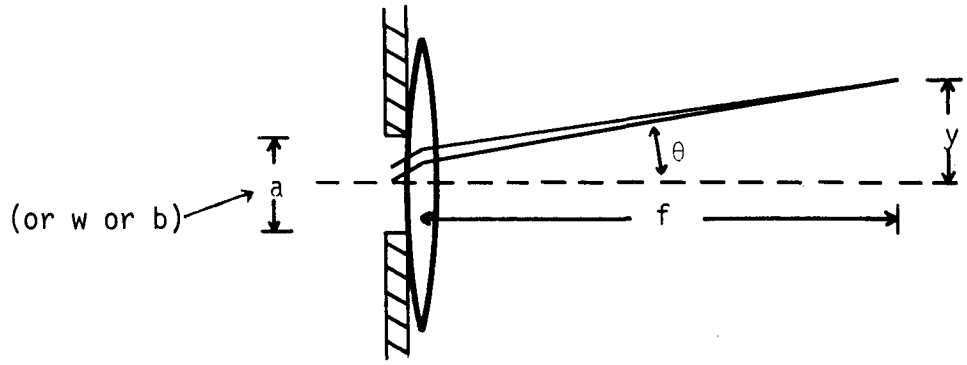

Solution

See Figure 6. The texts give the intensity equation for Fraunhofer diffraction as

$$I = I_0[(\sin^2 \alpha)/\alpha^2], \quad \alpha = (\pi a/\lambda) \sin \theta; \qquad \text{(HR)*}$$

$$I = I_0[(\sin^2 u)/u^2], \quad u = (\pi b/\lambda) \sin \theta; \qquad \text{(B)*}$$

$$I = I_0\left[\frac{\sin(\pi a/\lambda \sin \theta)}{\pi a/\lambda \sin \theta}\right]^2; \qquad \text{(SZ)*}$$

$$I = I_0\left[\frac{\sin^2 \phi/2}{\phi/2}\right]^2, \quad \phi = (2\pi w/\lambda) \sin \theta. \qquad \text{(WS)*}$$

Find θ: $\tan \theta = y/f = (2.00 \times 10^{-3}\ \text{m})/(3.00\ \text{m})$. For this small angle, $\tan \theta \simeq \theta$. Using the notation of Halliday and Resnick:

$$\alpha = \frac{\pi a}{\lambda}\left(\frac{y}{f}\right) = \frac{\pi(6.0 \times 10^{-4}\ \text{m})(2.00 \times 10^{-3}\ \text{m})}{(500 \times 10^{-9}\ \text{m})(3.00\ \text{m})} = 2.51.$$

Then

$$I = (12.0 \times 10^{-6}\ \text{J/m}^2\ \text{s})[\sin^2(144°)/(2.51)^2] = 6.58 \times 10^{-7}\ \text{J/m}^2\ \text{s}.$$

C(3). A counterfeiter photographs a bill prior to making his engraved plate. See Figure 7. His camera has a 2.00×10^{-2} m diameter lens, and he uses daylight (550×10^{-9} m). What is the farthest he can place his camera from the bill if he wants to be able to resolve details 1.00×10^{-4} m apart.

Solution

The limiting angle of resolution for a circular aperture is $\theta = 1.22\lambda/d$. The angle θ is related to the bill-camera distance by $y/x \simeq \tan \theta \simeq \theta$ for small angles, which you can anticipate here. See Figure 8. Thus, $y/x = 1.22\lambda/d$ and

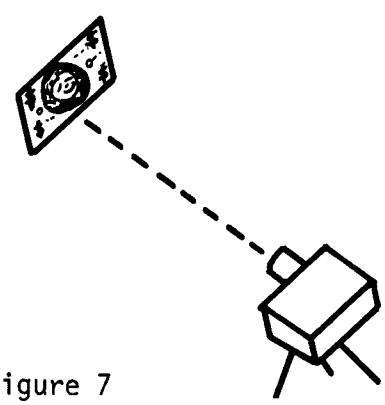

Figure 7

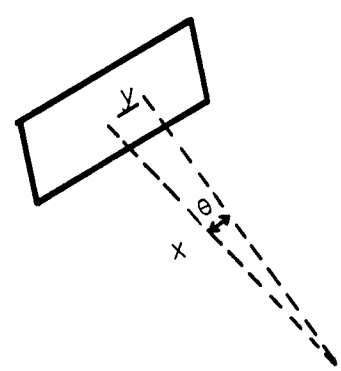

Figure 8

*HR = Halliday and Resnick. B = Bueche. SZ = Sears and Zemansky. WS = Weidner and Sells.

$$x = \frac{yd}{1.22\lambda} = \frac{(1.00 \times 10^{-4}\ \text{m})(2.00 \times 10^{-2}\ \text{m})}{(1.22)(550 \times 10^{-9}\ \text{m})} = 3.00\ \text{m}.$$

D(4). A diffraction grating has 5.5×10^5 lines/m. What is the highest order for which a 560×10^{-9} m green light can be observed? Assume normally incident plane waves.

Solution

The intense (principal) maxima are located by $m\lambda = d \sin\theta$. The maximum viewing angle is $\theta = \pi/2$. In this case, $m\lambda \leq d$ because m is an integer. Thus,

$$m \leq \frac{d}{\lambda} = \frac{1}{(5.5 \times 10^5/\text{m})(560 \times 10^{-9}\ \text{m})} = 3.2 \quad \text{and} \quad m = 3.$$

Problems

E(2). If the yellow light from a sodium arc ($\lambda = 589 \times 10^{-9}$ m) is used in a Franunhofer single-slit diffraction experiment, how wide must the slit be if the first minimum occurs at an angle of 6°? Would it be difficult to carry out this experiment?

F(2). A plane wave having wavelength 5.90×10^{-7} m falls on a slit of width 0.400×10^{-3} m. A converging lens, focal length of 0.70 m, is placed behind the slit and focuses the light on a screen. What is the distance on the screen from the center of the diffraction pattern to (a) the first minimum? (b) the second minimum?

G(3). Some persons who live in the Arctic reduce the amount of light entering their eyes by wearing opaque screens with slits cut in them as shown in Figure 9. What is the smallest width of the slits so that the "sunglasses" will not prevent resolution of objects 0.30 m apart and 500 m away? Assume sunlight with $\lambda = 6.00 \times 10^{-7}$ m and Fraunhofer diffraction.

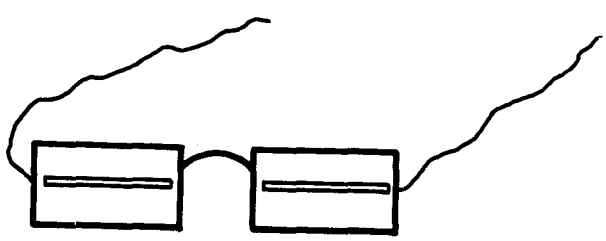

Figure 9

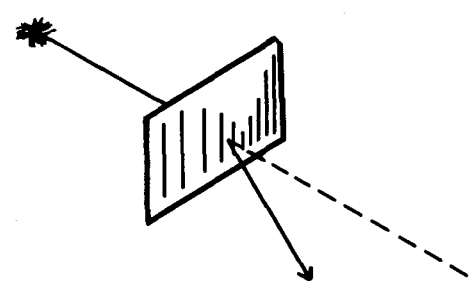

Figure 10

H(4). A student calibrates a diffraction grating using light from a helium-neon laser ($\lambda = 6.328 \times 10^{-7}$ m) and Fraunhofer conditions. See Figure 10. The first-order principal (or most intense) maximum occurs at 38°.

(a) What is the spacing between the rulings on the grating? (This is what the calibration accomplishes.)

(b) At what angle is the second-order principal maximum?

I(4). A diffraction grating 0.0200 m wide has 6000 rulings. At what angles will the principal (or most intense) maxima occur if the incident radiation has a wavelength of 5.89×10^{-7} m. Assume Fraunhofer conditions.

Solutions

E(2). 5.6×10^{-6} m. Yes, if you had to make your own apparatus. The slit is very narrow.

F(2). (a) 1.03×10^{-3} m. (b) 2.06×10^{-3} m.

G(3). 1.00×10^{-3} m. H(4). (a) 1.03×10^{-6} m. (b) It does not occur.

I(4). First order: 10°. Second order: 21°. Third order: 32°. Fourth order: 45°. Fifth order: 62°.

PRACTICE TEST

1. Use Huygens' principle to explain how light through a single slit can produce interference fringes.

2. (a) State the optical conditions necessary for Fraunhofer diffraction.
(b) What is the distance between the central maximum and the third minimum of a Fraunhofer single-slit diffraction pattern on a screen 0.40 m away from the slit? The light has a wavelength of 5.50×10^{-7} m, and the slit is 2.50×10^{-3} m wide.

3. (a) Use the Fraunhofer single-slit diffraction pattern intensity graph to describe the conditions for which two objects are just resolved.
(b) A telescope is used to observe two distant point sources 0.50 m apart. The light used has a wavelength of 5.00×10^{-7} m, and the objective mirror of the telescope is covered with a screen having a rectangular slit of width 1.00×10^{-3} m. What is the maximum distance at which the two sources may be distinguished as two?

4. What is the longest wavelength that can be observed in the third order for a diffraction grating having 1.00×10^{6} lines/m?

Practice Test Answers

2. (b) 2.60×10^{-4} m. 3. (b) 1.00×10^{3} m. 4. 3.3×10^{-7} m.