University of Nebraska - Lincoln
DigitalCommons@University of Nebraska - Lincoln

Waterfowl Management Handbook | US Fish & Wildlife Service

1-1-1990

13.2.12. Artificial Nest Structures for Canada Geese

I. J. Ball
Montana Cooperative Wildlife Research Unit; University of Montana, Missoula, MT

Follow this and additional works at: http://digitalcommons.unl.edu/icwdmwfm

Part of the Environmental Sciences Commons

Ball, I. J., "13.2.12. Artificial Nest Structures for Canada Geese" (1990). *Waterfowl Management Handbook*. Paper 10.
http://digitalcommons.unl.edu/icwdmwfm/10

This Article is brought to you for free and open access by the US Fish & Wildlife Service at DigitalCommons@University of Nebraska - Lincoln. It has been accepted for inclusion in Waterfowl Management Handbook by an authorized administrator of DigitalCommons@University of Nebraska - Lincoln.

13.2.12. Artificial Nest Structures for Canada Geese

I. J. Ball
Montana Cooperative Wildlife Research Unit
University of Montana
Missoula, MT 59812

Under natural conditions, Canada geese are protected from predatory mammals by selecting nest sites on islands, muskrat lodges, cliffs, or snags, or nests made by ospreys or other motors. The limited availability of safe natural sites seems to hold many goose populations below limits set by other habitat factors. The use of artificial structures to provide safe nest sites for Canada geese in North America began more than 50 years ago; structures are now among the most widely used, and most successful, of goose management practices.

Structures are considered any artificial device, with the exception of earthen or rock islands, intended to provide a safe nest site for Canada geese. In some situations artificial islands are preferable to structures, but artificial islands are beyond the scope of this chapter.

Deciding Whether to Use Structures

The purpose of structures is to increase nest success, usually by reducing nest predation or flooding. Structures are quite effective, often supporting nest success rates of 85–90% versus 65–75% on most natural islands or marshes. An increase in the number of pairs that uses structures is not usually accompanied by a proportional or long-term decrease in the number of pairs using adjacent natural sites. Hence, structures tend to increase a population's base as well as its average productivity. However, a population will not increase if the additional goslings do not fledge (population limited by brood habitat) or if adult mortality is excessive. Structures can do nothing to improve the former situation, and pioneering use of structures is likely to be very slow if adult mortality is excessive.

Numerous important considerations about structures are not fundamentally biological in nature: aesthetic issues, agency policies, costs, durability, maintenance demands of nest materials, and potential for crop depredation or other nuisance problems that sometimes accompany an increasing goose population. Primary advantages of nest structures for geese are that occupancy and nest success usually are very high, capital costs are relatively low, structures are adaptable and popular for use on private lands, and results usually are rapid and tangible. The need for continuing maintenance is probably the most commonly overlooked disadvantage. In addition, poorly designed or maintained structures can cause accidental goose mortality, and some people object to structures because of their obtrusiveness or artificiality. Nest structure programs for geese probably fail more because of inadequate maintenance than for all other reasons combined. Consequently, a program should not be initiated unless the necessary maintenance can be continued for at least 10 years.

Durability of Structures

Shifting ice is a powerful force and the most important threat to structure durability in most areas. Ice damage is rare on properly installed structures in ponds less than about 50 yards in diameter. However, potential problems increase as the water area increases, and placement of nest structures then be-

comes exceedingly important. Relative security from ice damage increases as water depth decreases; the distance from shore decreases; the amount of emergent vegetation increases; and the lee protection afforded by points, coves, bays, and islands increases.

Structures installed in relatively deep water are particularly vulnerable to ice damage: ice movement tends to be associated with deeper water, and increasing water depth also multiplies the mechanical advantage or leverage of the ice. Potential structure sites where the water depth (including unconsolidated sediments) exceeds 3 feet should be avoided unless the site is well sheltered or special precautions are taken to prevent ice damage. Ice can damage structures either by bending the structure support pipe or by tipping it (i.e., pushing the upper portion of the pipe laterally through the bottom substrate so that the pipe leans but is not bent). Selecting shallow and sheltered sites helps prevent either problem. In addition, bending can be prevented by increasing the rigidity of the support pipe. This may involve using pipe with thicker walls, adding a "sleeve" of larger pipe that extends from a foot below the bottom substrate to near the water surface, or by filling the pipe with concrete. Tipping, on the other hand, is prevented by seeking a firmer bottom substrate, increasing seating depth of the pipe into the bottom substrate, or by welding fins onto the pipe to increase its resistance to being tipped. Support pipes must be seated at least 3 feet into firm bottom substrate. Support pipes 8–10 feet in length are adequate for most overwater sites (3–4 feet seating depth, 1½–3 feet water depth, and 3 feet structure height). Substantially longer pipes will be necessary where deeper water or soft bottom substrate occurs.

Along rivers or streams, flood damage may replace ice as the major concern. Placement of structures over water is not recommended in riverine systems except in the most sheltered locations. Shoreline sites on inside bends, oxbows, and the downstream ends of islands tend to be relatively secure, but even these may be vulnerable during floods. Placing structures on or adjacent to islands is not recommended unless persistent problems from predation or flooding are known to occur.

Nest Materials

Under natural conditions, geese often nest and incubate successfully on substrates such as gravel, cobble, ledges, and stick nests, without the fine-textured nest material and cover required by ducks. Geese have nested successfully in structures with no nest material at all, and one was observed nesting successfully in a bald eagle nest-atop the deteriorating carcass of the previous resident! Geese obviously are quite flexible with respect to nest material, but managers still should think carefully about nest material choices. Some materials will last several years without maintenance, while others will deteriorate substantially in a few months or may even be blown away in the first windstorm.

Loose vegetation is the most common material used in structures. Flax straw is preferred because it resists deterioration well and the stems bind together so the risk of removal by wind is decreased. Coarse grass hay or grain straw are acceptable substitutes, although annual replenishment usually will be necessary. Alfalfa hay should not be used because it deteriorates rapidly. Loose vegetation must be protected from wind loss in most types of structures. A simple and effective method to protect material from wind is to construct a sturdy "tic-tac-toe" frame from steel rods 1/4 to 3/8 inches in diameter or from 1-inch-diameter willow sticks that are notched and wired securely at the junctions. The center square of this frame should be 18 inches or more across, and the length of the arms must allow the frame to settle within the structure as the nest material deteriorates. Nest material also may be wired down or secured by a 3- to 6-inch-wide sod "collar" laid over the outside edges of the vegetation.

Bales of straw or grass hay can be used as nest material on certain types of structures, and these often last 3 or more years without maintenance. Again, flax is preferred, with coarse grass hay or grain straw acceptable substitutes. The bales are wired tightly together with the cut ends at the top and bottom, then are wired securely to the structure platform. Tightly packed bales are best, but a 2-inch depression, 8–10 inches in diameter, should be cut near the center to reduce the chances of down being blown away during incubation recesses.

Nest material of bark or wood chips will last several years in many types of structures, provided the chips are large enough to resist the wind. Suppliers of landscape materials can provide large decorative bark chips (roughly $1 \times 3 \times 5$ inches). These chips are reasonably wind resistant and are highly acceptable to geese. A mixture of large and small chips (or even flax straw) works well because geese arrange the coarsest chips around the outside edge of the structure, which tends to keep the lighter material

from blowing out. Chipped or mulched cedar is highly resistant to deterioration and insect nest parasites but must be mixed with larger, heavier chips to reduce wind losses. Sawdust should not be used because it traps moisture and also is vulnerable to wind. Many other nest materials have been used in structures, and some seem to offer major advantages. Sod, both in large pieces and in strips, is quite durable. A product called expanded shale offers essentially unlimited durability and can be mixed with chips or flax straw; pea gravel probably would work as well but weighs about twice as much.

In summary, careful selection of nest materials can offer major advantages in reduced structure maintenance. In situations where routine annual maintenance is not a problem, then properly installed loose grain straw or grass hay is adequate. Otherwise, more durable materials should be considered.

Avoiding Safety Problems

In many ways, structures are inherently safer than natural nest sites, but safety problems are likely to arise unless care is taken. The most common safety problem in nest structures is for goslings to be trapped in the structure after nest material settles, deteriorates, or blows out. Goslings often cannot negotiate a vertical rise of more than 4 inches. Rigorous maintenance of nest material will prevent this problem, but maintenance often does not occur in spite of the best intentions. Consequently, any nest structure should provide a fail-safe method for gosling exodus regardless of the nest material status. Some practical solutions to this problem include wood shavings fiberglassed to the inside walls of conical fiberglass baskets, escape ports (3 inches in diameter), ramps (6 inches wide and ≤45°) made from wood or 1/2-inch-mesh galvanized wire, and slatted sidewalls with 2-inch vertical gaps.

Other relatively common entrapment problems (and their solutions) include:

- Goslings become entangled in wire mesh (all wire mesh used in structures should be smaller than 1/2 inch or bigger than 2 inches);
- Goslings are trapped between a deteriorating large bale and the wire mesh used to wrap it (if you wrap bales, use mesh bigger than 2 inches); and
- Adults are entangled in cord used to secure nest material (use soft, single-strand wire or other methods to retain nest materials).

Evidence of entrapment mortality disappears rapidly because of scavengers or decomposition, so the appropriate preventive measures must be taken before a problem is recognized.

With the advantage of an elevated nest site, geese are quite effective at protecting their nests from predation. Occasionally, an unusually aggressive raccoon will prove to be the exception. Suspending a 30- × 4-inch PVC pipe around the support pole immediately below the structure, or trapping and removing the offending individual are two effective solutions. On rare occasions, common ravens have learned to raid structures when the geese take incubation breaks. The removal of offending individuals (within legal constraints) is the only known solution.

Placement of Structures

Geese are highly traditional, and populations seem to expand from established areas outward. Usually, the largest water areas in a particular area will be pioneered first. As a general guideline, structures should be placed in or near areas used by geese during the breeding season, but where secure nest sites are either lacking or saturated.

Territorial strife among breeding pairs tends to increase when structures are spaced less than about 100 yards apart, particularly when the two structures are within sight of each other. Providing loafing sites near each structure, reducing line-of-sight visibility by careful placement relative to obstructions, and reducing structure height may help to minimize such conflicts. However, the 100-yard spacing rule remains a good guideline for maximizing occupancy and minimizing nest abandonment caused by social strife.

Structures placed 10–15 yards offshore are readily accepted by geese in most areas. These offshore structures provide adequate safety where water depth of 18 inches or more forces potential predators to swim to the site and the structure support provides some resistance to climbing. On certain easily climbed structures such as large bales, greater distance from shore (50 yards or more) and visual isolation provided by emergent vegetation may reduce predation risks. In areas where geese accept structures installed on shore, ice damage is eliminated (although problems with predation or human disturbance may increase). In situations where geese have been slow to accept shoreline structures, some managers have had good results by installing a structure at the site of a previously unsuccessful ground nest or by installing

structures 10–15 yards offshore and then moving them progressively closer to shore over 2–3 years of use.

Little objective information exists on preference of geese for structures of different heights, but the following suggestions are offered as practical guidelines. Overwater sites should be high enough to avoid flooding during the highest water levels, with a target of about 3 feet in height during the nesting period. This height seems to deter most swimming predators, reduces visual contact between pairs, and is aesthetically acceptable. For structures installed on land, a height of 7–8 feet is recommended to discourage most leaping predators and to prevent livestock from removing nest material. Additional height over this minimum seems to reduce the effects of human disturbance but also makes installation and maintenance increasingly difficult and dangerous. For tree-mounted structures, heights of 10–20 feet may best reduce the chances that predators will detect the nest and will help decrease obtrusiveness by placing the structure above the lowest branches.

Costs

The initial cost of artificial nest structures varies substantially depending on design and materials. Including labor, the cost ranges from a low of $20 to a high of perhaps $200. To make realistic estimates of cost per gosling produced, managers must consider initial cost (materials and labor), annual maintenance cost, occupancy rates, nest success, and average structure life. Often, managers tend to focus primarily on the material cost of structures with little consideration of installation and maintenance costs. For structures requiring annual maintenance visits, the maintenance cost easily can exceed initial cost over the life of the structure. Average structure life, an extremely important but often overlooked cost variable, ranges from about 2 years for large bales, 10–15 years for most other structures, to perhaps more than 35 years for the most durable designs. Reducing initial cost by using surplus or salvage materials is a common temptation. This may be wise in some instances, but it can represent a serious error if the area begins to resemble a junkyard.

Aesthetics

Placement and structure color are key aesthetic issues-structures that are not easily seen are least likely to offend. In addition, complaints about aesthetics can be avoided by minimizing the following structure characteristics: height, size, reflectivity or glossiness, complexity of lines, and angularity of lines. Nest structures that are in disrepair (leaning, no nest material, etc.), and those that are recognizable as an everyday item (tires and washtubs, for example), seem to generate the most complaints. Aesthetic issues are important to many people, and the pressure to maintain visually pleasing environments will increase. With recognition and care, the most reasonable aesthetic concerns can be met.

Monitoring

The most important variables in a structure monitoring program are occupancy (percent of structures occupied) and nest success (percent of known-fate nests in which at least one egg hatches). Clutch size and egg viability usually are of lesser interest because they are well documented in the literature. A basic monitoring program documenting occupancy and nest success provides most of the data necessary to evaluate the progress of the structure program, but additional data may be useful to determine annual variation in productivity. Furthermore, changes in egg viability may provide an early warning of developing problems with pesticides or other contaminants.

To minimize risks of nest abandonment, nests should not be checked until late incubation. If structures are checked only once each year (probably the most defensible strategy for most management programs), then the ideal schedule is to begin cheeks immediately after about 90% of the nests have been terminated. The evidence available for determining nest success begins to deteriorate soon after activity in a nest ceases, so delayed monitoring is accompanied by a loss in accuracy. Successful nests contain egg membranes that are leathery, relatively intact, and usually detached from eggshell fragments. Chalky, greenish-white waste products from the goslings often can be found encased in the membranes. Structure location should be marked on a detailed map, and each structure should be marked with a unique identification number (on both the structure and the map). The potential value of monitoring structures is decreased substantially unless occupancy and success rates are summarized and evaluated annually.

Types of Structures

Dozens of structure designs have been used successfully for Canada geese, and managers often

develop strong opinions about what design is best. There is little reason to believe that any one type is better or worse than another with respect to acceptability by geese. However, structures do differ substantially in durability, aesthetics, and costs. Choosing the best design involves-careful thought about local conditions: icing patterns; costs and seasonal availability of labor; availability of emergent vegetation for physical protection and visual screening; water depth; substrate firmness; availability of materials; shipping costs for commercially made structures; and availability of trees or other natural supports. The structure types presented here represent examples of designs that have been used successfully in many situations. Detailed plans for these designs are available from the author.

Single-post Structures

Advantages of single-post structures (Fig. 1) include durability, simplicity of construction and lines, low to moderate costs, ease of installation (often 15–20 min), and commercial availability if desired. Geese will accept nest compartments varying from 22 to more than 42 inches in diameter, but 26–32 inches is probably best for practical reasons. Depth should be 8–12 inches to retain nest material, but provisions must be made for safe exodus by goslings. Shape is not critical, but conical shapes seem to retain nest material particularly well and provide for gosling exodus. Rounded "tank end" or "pot" shapes seem to be most acceptable aesthetically. Fiberglass, rubber, or wood (1 inch or more in thickness and of a rot-resistant species) are preferred materials. Positive drainage must be provided. Structures made of wire (<1/2- or >2-inch mesh size) may be acceptable in some situations, but nest material in wire structures is easily blown away. Wooden structures soon weather to drab colors, but structures made of other materials should be painted to blend with surroundings.

Supports may be wooden posts or metal pipes. Wooden posts (≥6 inches in diameter) are adequate in some situations, but are less resistant to climbing predators than pipe and will rot quickly unless they are treated or remain saturated with water. Furthermore, buoyancy can cause wooden posts to

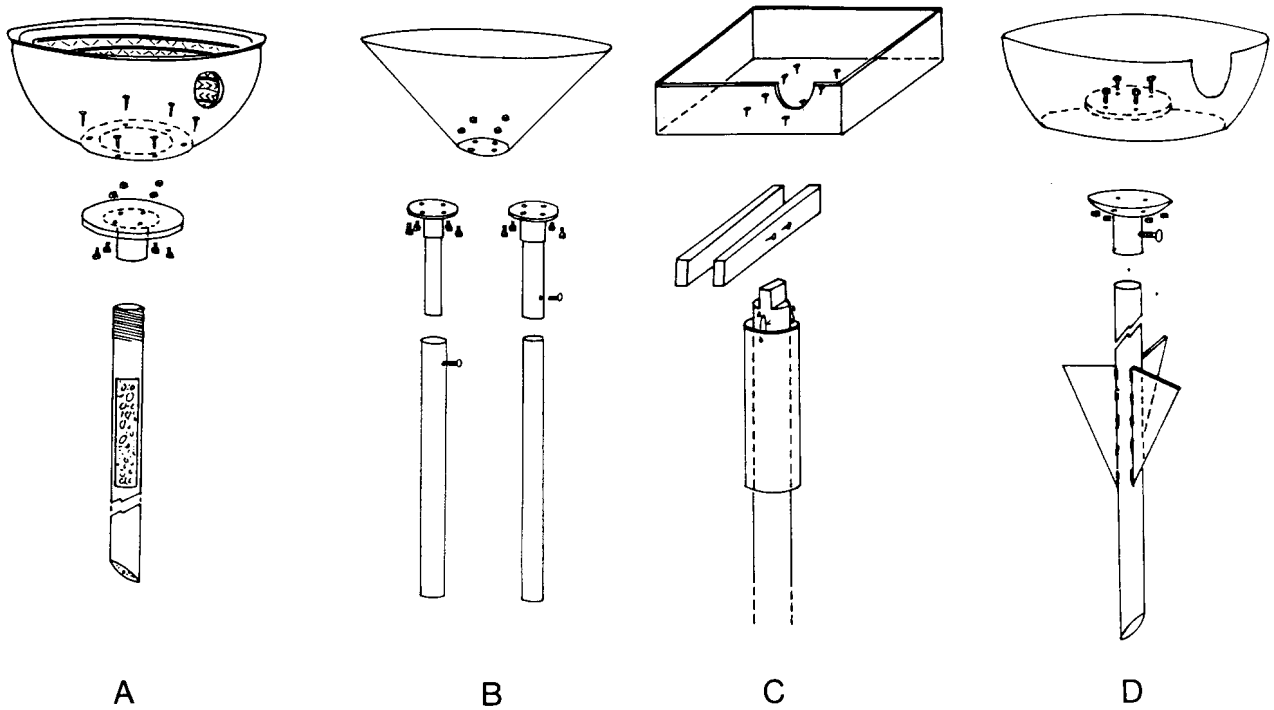

Fig. 1. Single-post structures. *A*. Inverted, painted tire attached to threads on the support pipe with a treated plywood disk and a plumbing floor flange. A driving cap is essential to prevent thread damage during installation. The support pipe can be filled with concrete to prevent bending. *B*. Fiberglass cone basket with welded mounting plate and adjustable ferrule mounts. *C*. Wooden box with predator guard made of PVC pipe. The box also can be built 12–18 inches deep with slatted sides to maintain nest material but allow goslings to exit through the 2-inch gaps between slats as the fill level drops. *D*. Fiberglass tub with a mounting plate made from a farm implement disk. The pole is finned to prevent tipping.

rise and tip unless they are deeply seated. Steel pipes from 1 ½ to 4 inches in diameter have been used successfully. A useful standard is 2-inch heavy-duty (sometimes called "schedule 80") pipe with a 2-inch inside diameter and a 2⅜-inch outside diameter. This pipe is sturdy enough for any but the harshest conditions and is available in many areas at salvage prices as drill stem. If the nest compartment drains to the support pipe, or if standard weight pipe ("schedule 40") is used, then a hole should be drilled into the pipe a few inches above the water line to prevent flooding of the nest or splitting of the pipe by ice expansion.

Platforms

Platforms (Fig. 2) with four legs seem to offer some advantage in stability where soft bottom substrate occurs and where the upper nest structure is extremely heavy (as when two bales are used as nest material). Costs tend to be relatively high because four supports are required, and because installation is time-consuming (usually 4 or more person hours). The complicated lines of platforms reduce aesthetic acceptability to many people, but using bales as nest material can be a major advantage.

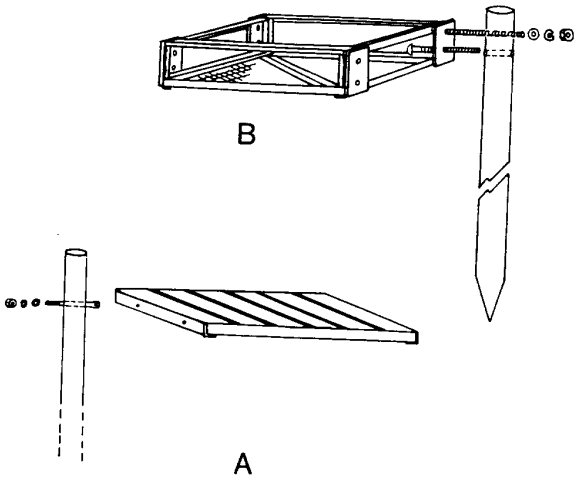

Fig. 2. Platform structures *A*. This basic version consists of four heavy pipe legs that bolt to a simple angle-iron frame (36 × 48 inches) supporting the wooden platform. Resistance to ice damage can be increased somewhat by constructing a rock crib between the legs. *B*. The reinforced platform increases ice resistance substantially because structural rigidity of the sturdy 36- × 42-inch frame is transferred to the legs. Two bales are wired to the simple platform or wedged into the upper framework of the reinforced platform.

Tree Structures

Most of the considerations for tree structures (Fig. 3) are similar to those for single-post structures. Advantages of tree structures are that the support is provided by nature and that carefully designed and installed tree structures can be extremely inconspicuous. Potential disadvantages are that trees are easily climbed by raccoons and that tree growth often destroys wooden structures.

If the available trees are long-lived and secure, relatively high costs for the structure may be justifiable. Conversely, if short-lived tree species are involved or if many trees are lost annually to beavers or bank erosion, then the more efficient strategy is to use less expensive structures with shorter potential lifespans. Tree structures present difficulties and potential dangers during maintenance, so providing durable nest materials is even more important than in other types of structures.

Large Bales

During the past several decades, the use of large round or rectangular bales as nest structures has become popular in many areas. Potential advantages are that no maintenance is needed between installation and replacement, bales are seen as somewhat natural, and their placement provides a

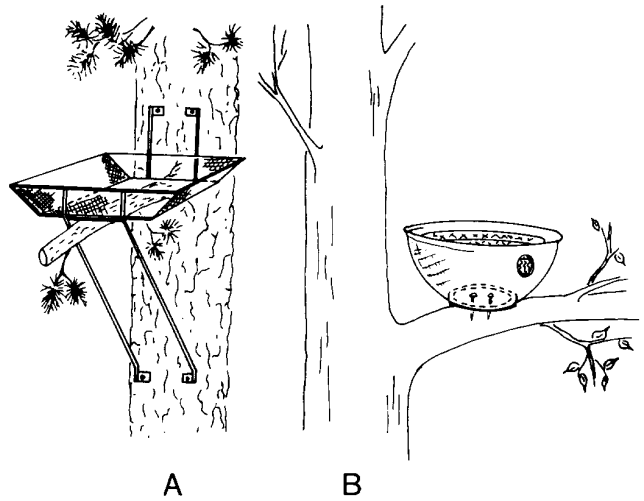

Fig. 3. Tree structures. *A*. Expanded steel structure attaches to tree with lag screws and bends to accommodate tree growth. *B*. Inverted, painted tire with treated plywood disk bottom attaches to tree with ringnails. Attachment may be in a crotch, on a large horizontal limb, or on a sawed-off vertical limb. If logging could occur, aluminum nails should be used.

practical and popular activity for public participation. Costs may be relatively low, but are not necessarily so if purchase price increases with demand or if high transportation and salary costs must be paid.

The most serious disadvantage is that bales seldom last more than 3 years, and often last only 1 or 2 years. Wrapping bales in wire mesh may extend their life somewhat, but the wire can trap goslings as the bale shrinks and the wire will remain in the marsh, creating litter or entanglement problems. The best compromise may be to use tight flax bales, double-wrapped with polypropylene twine and banded securely with plastic or metal strapping. This approach provides bales that usually last 2 or 3 years and greatly reduces the amount of litter left in the marsh. In grazed areas, cows will destroy bales if water levels drop. Bales are less resistant to leaping or climbing predators than most other structure types and occasionally provide den sites for predators.

Installation depth is critical for bales, with 18–30 inches strongly preferred. If the total depth of ice and water exceeds 12 inches, many round bales will tip over at ice-out unless the ice is completely removed from the hole and the bale settled firmly on bottom. Tipping, which occurs because the ice melts rapidly at the south side of the bale, reduces occupancy and life of bales. Large rectangular bales usually will drop through the ice with the cut ends up and down if placed on the ice with their long axis oriented north-south.

Culverts

One of the few fundamentally new approaches to nest structures in the past several decades has been the use of culverts tipped on end and filled with soil. Culverts offer the important advantages of being virtually maintenance free and exceedingly long-lived. Disadvantages are that heavy equipment may be needed for installation and that removal (if desired) can be very difficult.

Concrete culverts, as well as those made of smooth or corrugated steel, have been used successfully, although steel will no doubt rust through in time. Corrugated steel has some aesthetic drawbacks, although these can be minimized with careful site selection. Culverts will tip at ice-out nearly every time if merely placed on top of the ice. Culverts less than 30 inches in outside diameter are not recommended because of tipping problems, and the diameter should at least equal the water depth for the same reason. Culvert lengths of 6 feet are usually best, providing for 3 feet of structure height and 3 feet of water and settling of the culvert into the substrate. The choice of culvert diameter is a trade-off between resistance to tipping and culvert weight. A concrete culvert 30 inches in inside diameter with 3-inch walls weighs about 370 pounds per lineal foot or about 2,200 pounds for a 6-foot section. Even larger culverts (48 inches in inside diameter) have been used with excellent results. These are exceptionally resistant to ice damage, and geese can be excluded from one side of them with 6- × 6-inch wire mesh so that vegetative cover and security for nesting ducks are produced.

Heavy equipment is needed for moving the largest culverts, and installation requires either a dry wetland basin or thick, solid ice conditions. Culverts should be settled firmly into the substrate. Fill material can be rocks or gravel to slightly below waterline, but should be good soil from there up. If the fill is installed dry, it will settle substantially when it gets wet. The two solutions to this problem are to revisit the site after water levels rise and top off the fill or to carry enough water to saturate and settle the fill. Bottom sediments make adequate fill unless there are salinity or alkalinity problems. Culverts can be seeded with preferred plant species or merely allowed to develop with weedy species.

Floating Structures

Floating structures are highly acceptable to geese, but practical problems have plagued most projects. Ice damage usually is severe unless floating structures are removed each fall. Furthermore, floating wooden structures will become waterlogged and will sink unless flotation materials are added. Anchors are apt to drag and anchor cables or ropes often break. Finally, muskrats often destroy unprotected foam flotation material or sink structures by piling debris upon them. For these reasons, floating structures are not recommended for geese unless other options are unavailable and unless extreme care is taken to avoid the most common problems of this kind of structure.

Suggested Reading

Atkins, T. D., and T. L. Fuller. 1979. An improved nesting structure for Canada geese. Wildl. Soc. Bull. 7:192–193.

Brakhage, G. K. 1965. Biology and behavior of tubnesting Canada geese. J. Wildl. Manage. 29:751-771.

Giroux, J., D. E. Jelinski, and R. W. Boychuk. 1983. Use of rock islands and round straw bales by nesting Canada geese. Wildl. Soc. Bull. 11:172–178.

Higgins, K. F., H. W. Miller, and L. M. Kirsch. 1986. Waterfowl nesting on an earth-filled cement culvert. Prairie Nat. 18:115–116.

Mae-key, D. L., W. C. Matthews, Jr., and I. J. Ball. 1988. Elevated nest structures for Canada geese. Wildl. Soc. Bull. 16:362–367.

Messmer, T. A., M. A. Johnson, and F. B. Lee. 1986. Homemade nest sites for giant Canada geese. North Dakota Cooperative Extension Service, North Dakota State University, Fargo. Bull. WL-910. 8 pp.

Rienecker, W. C. 1971. Canada goose nest platforms. Calif. Fish Game 57:113–123.

Will, G. C., and G. I. Crawford. 1970. Elevated and floating nest structures for Canada geese. J. Wildl. Manage. 34:583–586.

Appendix A. Common and Scientific Names of Animals Named in Text.

Canada goose	*Branta canadensis*
Beaver	*Castor canadensis*
Common raven	*Corvus corax*
Bald eagle	*Haliaeetus leucocephalus*
Muskrat	*Ondatra zibethicus*
Osprey	*Pandion haliaetus*
Raccoon	*Procyon lotor*

Appendix B. English-Metric Conversion.

1 inch	= 2.5400 centimeters
1 foot	= 0.3048 meter
1 yard	= 0.9144 meter
1 pound	= 0.4536 kilogram

UNITED STATES DEPARTMENT OF THE INTERIOR
FISH AND WILDLIFE SERVICE
***Fish and Wildlife Leaflet* 13**
Washington, D.C. • 1990