University of Nebraska - Lincoln
DigitalCommons@University of Nebraska - Lincoln

Proceedings of the 3rd Vertebrate Pest Conference (1967) | Vertebrate Pest Conference Proceedings collection

3-7-1967

WINTER STARLING CONTROL WITH DRC-1339

Paul E. Levingston
California Department of Agriculture, Sacramento

Follow this and additional works at: http://digitalcommons.unl.edu/vpc3

Part of the Environmental Health and Protection Commons

Levingston, Paul E., "WINTER STARLING CONTROL WITH DRC-1339" (1967). *Proceedings of the 3rd Vertebrate Pest Conference (1967)*. Paper 23.
http://digitalcommons.unl.edu/vpc3/23

This Article is brought to you for free and open access by the Vertebrate Pest Conference Proceedings collection at DigitalCommons@University of Nebraska - Lincoln. It has been accepted for inclusion in Proceedings of the 3rd Vertebrate Pest Conference (1967) by an authorized administrator of DigitalCommons@University of Nebraska - Lincoln.

WINTER STARLING CONTROL WITH DRC-1339

PAUL E. LEVINGSTON, Supervising Biologist, Weed and Vertebrate Pest Control, California Department of Agriculture, Sacramento, California

Several years ago starling problems in cattle feed lots exploded to economic proportions. In 1964 one northern California feed lot operator reported a loss of $1,000 per day during the winter months. This resulted from daily activity of over a million starlings. Along with consuming and contaminating large amounts of cattle feed, the birds disturbed the cattle and prevented regular feeding habits. This reduced weight gains drastically.

To combat what had become a state-wide problem, in 1962 a cooperative program between the California Department of Agriculture, the county agricultural commissioners, the United States Bureau of Sport Fisheries and Wildlife, and the University of California was put into action.

The early work consisted of field trials in feed lots located in Solano, Madera, Merced, and Contra Costa Counties to develop behavioral information and control methods.

In northern California, McDougal's feed lot near Collinsvilie, Solano County, was selected as the field trial site. During winter of 1963-1964 the work consisted of bait preference trials and progressed to use of TEPP treated grain baits. This resulted in a calculated kill totaling 4l4,000 starlings.

Pilot control programs, under general supervision of the United States Fish and Wildlife Service, Division of Wildlife Services, Bureau of Sport Fisheries and Wildlife, were conducted at McDougal's feed lot during fall and winter of 1966 and 1967. The objective was to reduce the starling population to an economic tolerable number. To achieve this objective it was decided that, weather permitting, it would be necessary to have bait continuously exposed for starling consumption.

During the 1965-1966 operations in mid-October when starlings were first observed in the feed lot, DRC-1339 treated baits were exposed on flat boards and V-troughs mounted on cages containing live starling for decoys (Fig. 1 and 11) and in manger troughs(Fig. 111). After bait acceptance had been achieved an enlarged version of the decoy cage was constructed (Fig. IV). This station contained from 75 to 100 decoys. When it proved successful an artificial pond was constructed and a second large decoy station erected at this location. This area was fenced and DRC-1339 treated baits were exposed in troughs attached to the decoy station and on the ground near the pond. This was an effective baiting area until the winter rains began.

The smaller decoy bait stations were scattered throughout the feed lot and were effective until rain and cold nights limited decoy survival. When this occurred the stations were discontinued and the use of manger trough baiting expanded to cover the entire feed lot. This method of baiting exposes the bait to the starlings as they enter the feed bunkers. Manger trough baiting and the use of 16' x 3" x 1/4" redwood V-troughs placed at 50' intervals on cattle pen fence posts were the most effective techniques used.

Baits used were rolled milo, rolled barley and raisins. The grain and raisin baits were prepared separately in an auger type mixer and then remixed together in a ratio of three parts grain to one part raisins before exposure in the feed lot. The following method of bait preparation was used:

Rolled barley or rolled milo.....100 pounds
75% DRC-1339.....1200 grams

The DRC-1339 was dissolved in water. This solution was sprayed over the grain as it tumbled in the mixer.

After the DRC-1339 solution was sprayed on the grain one gallon of liquid molasses was poured over the tumbling bait.

Melted lard at a ratio of one pound of lard to six pounds of grain was then poured over the treated bait and allowed to tumble until adequate coverage was achieved.

The raisins were prepared in the same manner but without molasses. The amount of 75% DRC-1339 used depended upon the size of the raisins available. To prepare one raisin lethal baits the following amounts were used:

Number of Raisins per pound	Grams 75% DRC-1339 per pound of raisins
1000	1.4
1600	2.2
2200	3.0
3000	4.0

With the lard coating on these baits they could be exposed to two inches of rain and remain one particle lethal.

The pilot program during the winter of 1966-1967 also began in mid-October. Bait was exposed at the two large decoy baiting stations and in manger troughs throughout the feed lot. Baiting was continuous except during period of rainy weather.

The major component of the cattle feed ration during this year was rolled corn. As a result the bait used was rolled corn rather than the rolled barley and rolled milo used the previous winter. This was prepared in the same manner as the other grain baits.

Raisins were exposed early in the season but their use was discontinued when it became obvious that acceptance was low.

In addition to the starlings remaining at the feed lot during the day, extremely large numbers of starlings would arrive from other areas about 4:30 to 5:00 PM and engage in a heavy feeding before leaving for the roost. Continual bait exposure resulted not only in a decrease in the number of starlings that remained in the feed lot but also proved to be a method of reaching those birds that were in other areas for most of the day.

It was not possible to explore the major roost area; however, a concentration of dead starlings was found in a five square mile cattail and tule area four air miles from the feed lot during the winter of 1965-1966. Sampling indicated 1 1/2 dead birds per 100 square feet throughout the area or a total of 2,090,880 dead starlings at this roost.

During both winters numerous reports of dead birds from farmers and others were received. These reports were received from as far as thirty air miles from the feed lot.

During 1965-1966 it was calculated that considerably more than 3,500,000 starlings were killed and during 1966-1967 it is calculated that well over 5,000,000 starlings have been killed by operations at this feed lot.

The starling population at this feed lot during both seasons was related to weather. When moderate conditions prevailed and it was possible to bait, the starling numbers at the feed lot remained low. During prolonged rainy spells which made baiting impossible the population increased.

Effective and economic control was achieved at the feed lot by continuous baiting with DRC-1339 exposed in manger troughs and in V-troughs attached to cattle pen fence posts.

During these pilot programs control was specific for starlings with some reduction of the blackbird population. While there was a population of meadowlarks, coots and English sparrows in and adjacent to the feed lot no dead birds of these species were found and there was no noticeable reduction of these populations.

This is one approach to the control of this pestiferous bird in a specific situation. Adequate management of the overall starling population will, we hope, eventually be achieved through the use of this material in conjunction with other methods still to be found by research agencies.

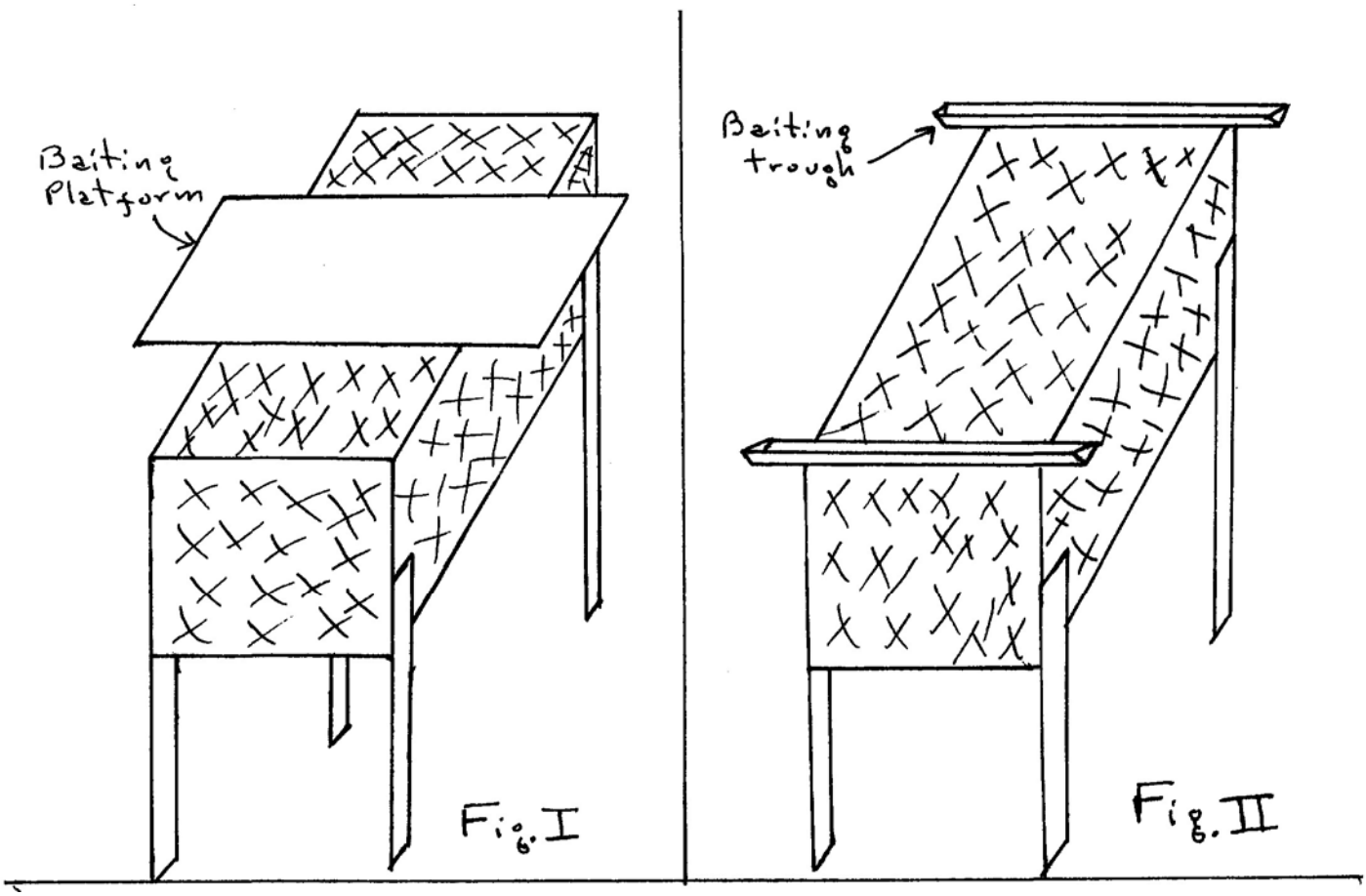

Fig. I

Fig. II

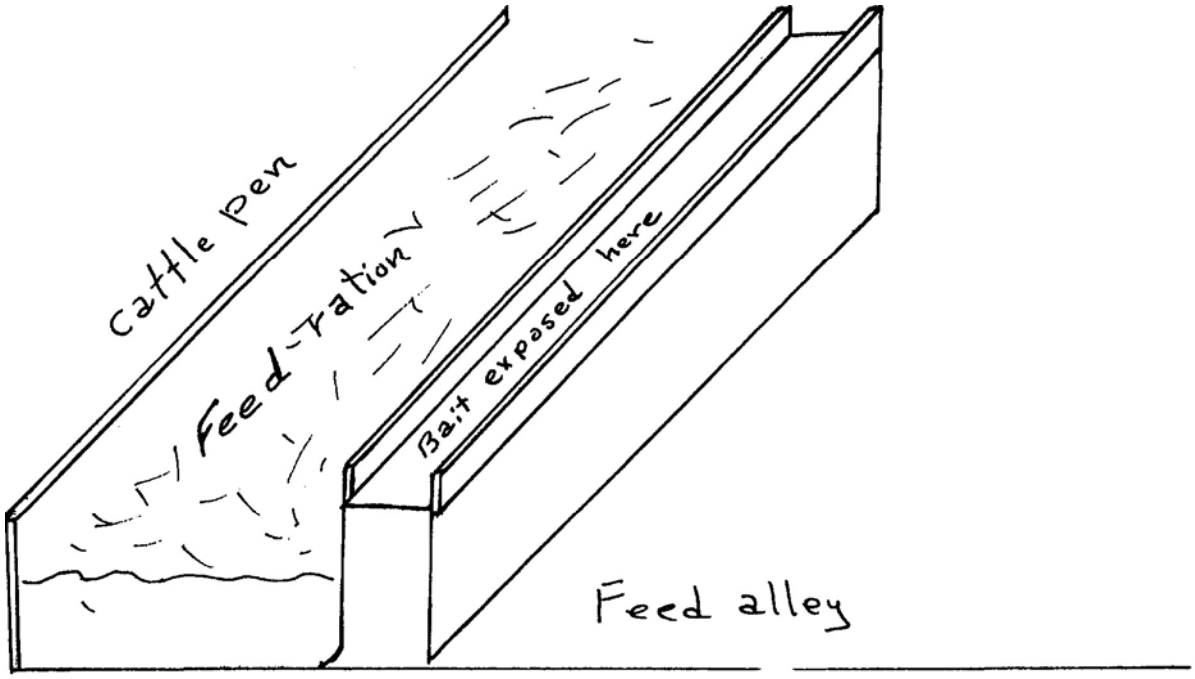

Fig. III

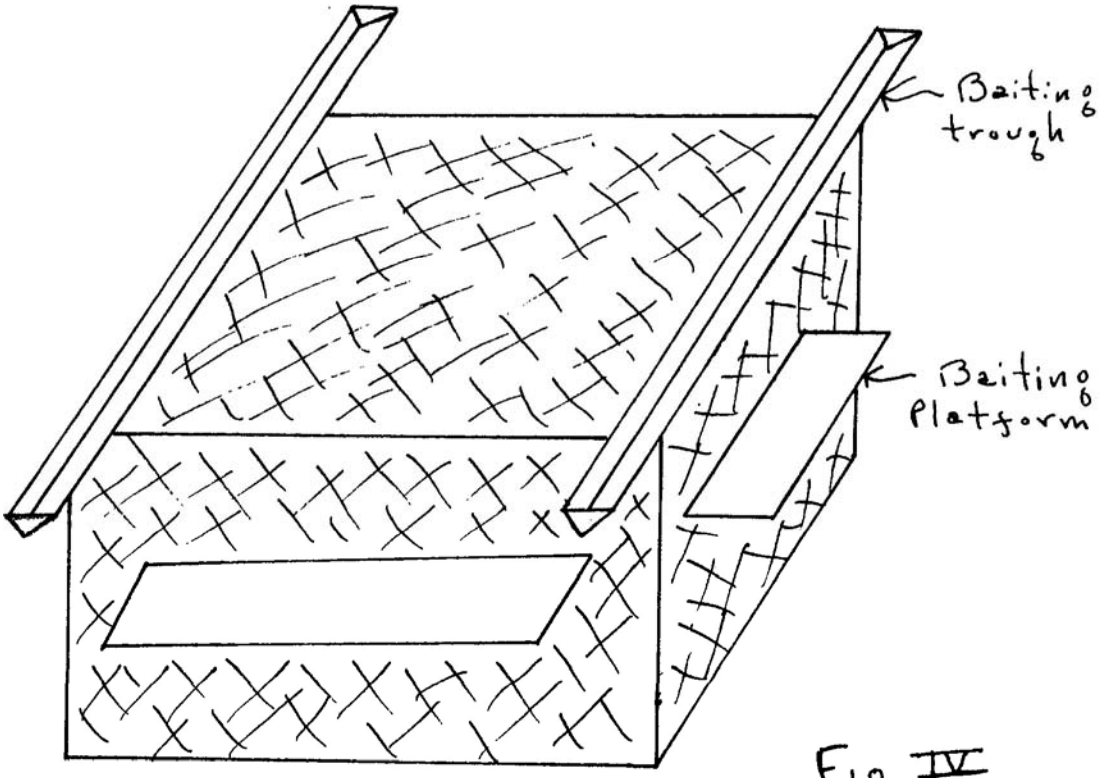

Fig. IV