University of Nebraska - Lincoln
DigitalCommons@University of Nebraska - Lincoln

Proceedings of the 8th Vertebrate Pest Conference (1978) | Vertebrate Pest Conference Proceedings collection

3-1-1978

RID-A-BIRD PERCHES TO CONTROL BIRD DAMAGE

William B. Jackson
Environmental Studies Center, Bowling Green State University, Bowling Green, Ohio

Follow this and additional works at: http://digitalcommons.unl.edu/vpc8

Part of the Environmental Health and Protection Commons

Jackson, William B., "RID-A-BIRD PERCHES TO CONTROL BIRD DAMAGE" (1978). *Proceedings of the 8th Vertebrate Pest Conference (1978)*. Paper 27.
http://digitalcommons.unl.edu/vpc8/27

This Article is brought to you for free and open access by the Vertebrate Pest Conference Proceedings collection at DigitalCommons@University of Nebraska - Lincoln. It has been accepted for inclusion in Proceedings of the 8th Vertebrate Pest Conference (1978) by an authorized administrator of DigitalCommons@University of Nebraska - Lincoln.

RID-A-BIRD PERCHES TO CONTROL BIRD DAMAGE

WILLIAM B. JACKSON, Environmental Studies Center, Bowling Green State University, Bowling Green, Ohio 43403

ABSTRACT: Rid-A-Bird wick perches, using 9.4% endrin or 11% fenthion, may be used on a variety of structures for control of house sparrows, starlings, and pigeons. Installations take advantage of a bird's propensity to perch briefly before feeding or entering roost or nesting structures. Applications may be made to a variety of structures but are restricted from food storage or preparation areas. Additional toxicity and use research is needed.

"Commensal birds" - starlings, house sparrows, pigeons - constitute significant pest control problems because of their relative abundance and close association with man and his structures. Direct contamination of stored or processed foods; contamination of structures, vegetation, and soil (with consequent implications for development of fungal organisms); feeding on crops and stored products; direct destruction of structures; and being reservoirs for zoonoses all constitute valid reasons for exercising management efforts. The options available, however, often are limited.

Except for local laws, none of these commensal pests is protected. However, many of the chemical tools used in bird management are restricted by EPA, and thus the operator is required to be certified.

Bird management is based on bird watching, regardless of the specific tools eventually employed. Birds, being creatures of habit and routine, are persistent and yet may be "spooked" by a slight change in environment or operator behavior. The pattern of feeding, loafing, and roosting is the focus of any control program. The specific behavior of birds approaching a structure or food source forms the basis for the use of Rid-A-Bird wick perches as a lethal control device.

Typically a bird will not fly directly to a nest, perch, or food source but will perch briefly at a convenient peripheral point to "survey" the situation. It may alight on the framing of a door before passing into a structure. Control with contact chemicals take advantage of this behavior. Before EPA birds might be eliminated by treating these transitory perches with a contact poison (like endrin). Now it is necessary to enclose the chemical, and an artificial perch containing the toxicant was evolved to provide temporary perches.

The Rid-A-Bird perch is a specialized tool that can be both effective and efficient. One significant advantage is that the bird is brought to the toxicant, which severely restricts its dispersal into the environment. Use is limited to EPA-certified operators.

The perch, essentially a hollow metal tube with a permeable wick that contacts the perching bird's foot, permits transfer of the toxic solution to the foot surface. The chemical is adsorbed through the skin, translocated through the body, and causes death some hours later, the interval being related to the contact dose. Thus birds may die at the roost site or some distance away if contact was made at a feeding or loafing area.

Three basic types of perches exist; each holds 1.0 oz of toxic solution (Fig. 1): For indoor use on sparrows and starlings (tube 3/8" x 27"); for outdoor use on sparrows and starlings (tube 3/8" x 27") but with wick protection; for indoor or outside use against pigeons (1 x 24"). This wide wick is weather resistant and the flat surface suited to the sitting (non-grasping) habits of pigeons.

Special holders and size variations permit considerable adaptation to local conditions. Some are attached to feeders, so that birds receive a lethal dose of toxicant while they gain sustenance. The relatively new, multidirectional (4-way) perch has found use in feed lots, especially at the corners of pens and intersections about feed bunks (Martin and Benson, 1976) (Fig. 2).

Rid-A-Bird perches may be used with only two chemicals: 9.4% endrin and 11% fenthion (Queletox). Under both EPA and state registrations and licensing, these are (or will be) considered restricted-use pesticides. Control of starlings, house sparrows, and pigeons is permitted. During cold weather the use of endrin is preferred, since the fenthion solution may give erratic results. Installations typically are serviced at 3-6 month intervals.

Label restrictions limit installations to in and around farm buildings, pipe yards, loading docks, building tops, inside other buildings, and bridges. Specific use prohibitions include inside food storage, food processing, or food handling buildings. In practice temporary residential installations have been used to deal with specific problems of awning or ledge infestations.

Use of perches has been recommended (after Knote, 1976) for situations where: Hard-to-clean-up food is readily available; livestock or domestic animals are feeding; structures are used for nesting or roosting; rapid re-invasion of structures occurs; bait shyness is evident; toxic baits are not permitted or limited; bait exposure creates hazard for people/pets; bait exposure constitutes a hazard to non-target species; pre-baiting and baiting are too costly; sticky repellents are not possible or desirable; and on-site mortality or behavior change of birds is public relations problem.

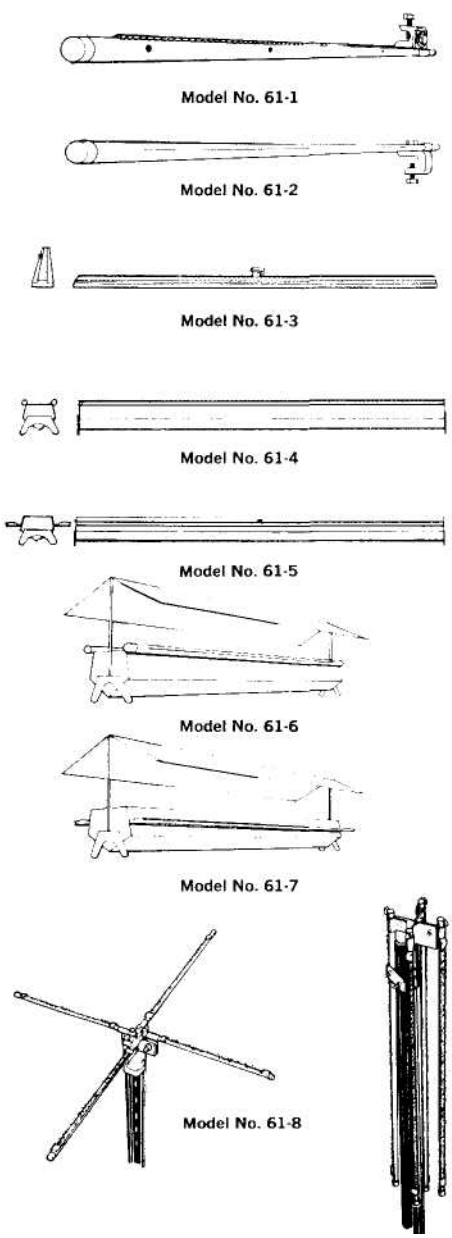

STANDARD INSIDE PERCH — For use on Sparrows and Starlings, inside buildings and under canopies and other protected areas. Perch comes complete with necessary bracket and clamp for attachment. (Model No. 61-1)

ALL-WEATHER PERCH — For use on Sparrows and Starlings on the outside of buildings. Comes complete with bracket and clamp for installation. (Model No. 61-2)

PIGEON PERCH — Made especially for pigeons, this perch can be used either inside or outside of buildings. Perch is waterproof and is attached with clamp or suitable adhesive cement. Perch is made in 2-foot lenghts, and can be manufactured in any required length to meet specific situation. (Model No. 61-3)

TROUGH PERCH — for Starlings and Sparrows — A water trough, each edge of which is the Rid-A-Bird All-Weather Perch for Starlings and Sparrows. Comes complete, ready for installation. (Model No. 61-4)

PIGEON TROUGH PERCH — A water trough, with the Rid-A-Bird Pigeon Perch mounted on each side. Comes ready for installation. (Model No. 61-5)

CANOPY PERCH — for Starlings and Sparrows — A feeding trough, each edge of which is the Rid-A-Bird All-Weather Perch. Attached canopy protects feed from precipitation. (Model No. 61-6)

PIGEON CANOPY PERCH — A feeding trough, with the Rid-A-Bird Pigeon Perch attached on each side. Attached canopy protects feed from precipitation. (Model No. 61-7)

ALL-DIRECTIONAL PERCH — Complete kit with 4 61-2 all-weather perches for use in open areas infested with pest birds. This device can be permanently or temporarily installed on many types of vertical supports such as fence posts, both wood and steel, pipes, framing lumber, etc. The kit includes mounting "U" bolt and a 30" extension.

Figure 1.

Installations within buildings should take advantage of the birds' propensity to move from corner to corner or side to side, even at night; and perches should be located in likely contact positions.

Despite their widespread use, perch installations have been described in only a few published papers. In Columbia (MO) downtown pigeon and starling populations defaced buildings and signs and were regarded as a major nuisance (Sanford, 1967). Installation of perches in a 60-block central business area eliminated the problem populations, and complaints ceased. Although the city contracted for the unit installations, they considered reservicing the units themselves. However, contracting for this as well probably will be cheaper, according to their analysis.

Birds frequently roost in or on signs, in part because the lights provide nighttime warmth. These are excellent perch installation sites, and toxic baits usually would be inappropriate because of traffic patterns and people/pet contacts (Meester, 1976). Both defacement and internal fire hazards resulting from accumulation of nesting materials and wear or corrosion of wiring are justifications for action. Placement would be on sign top, where birds stop initially, and inside, if the structure permitted. Often a boomtruck is required for such installations.

Dill (1973) describes a sparrow infestation in a manufacturing plant. Many exterior perches had been installed along the line of bird flight but without effect. Observation indicated that the birds exited through a small hole along a monorail and that there were multiple natural perches both inside and outside. Tanglefoot was applied to these prexisting perches, and a toxic perch was placed on each side of this hole. Within 10 days the 600-800 birds had been eliminated.

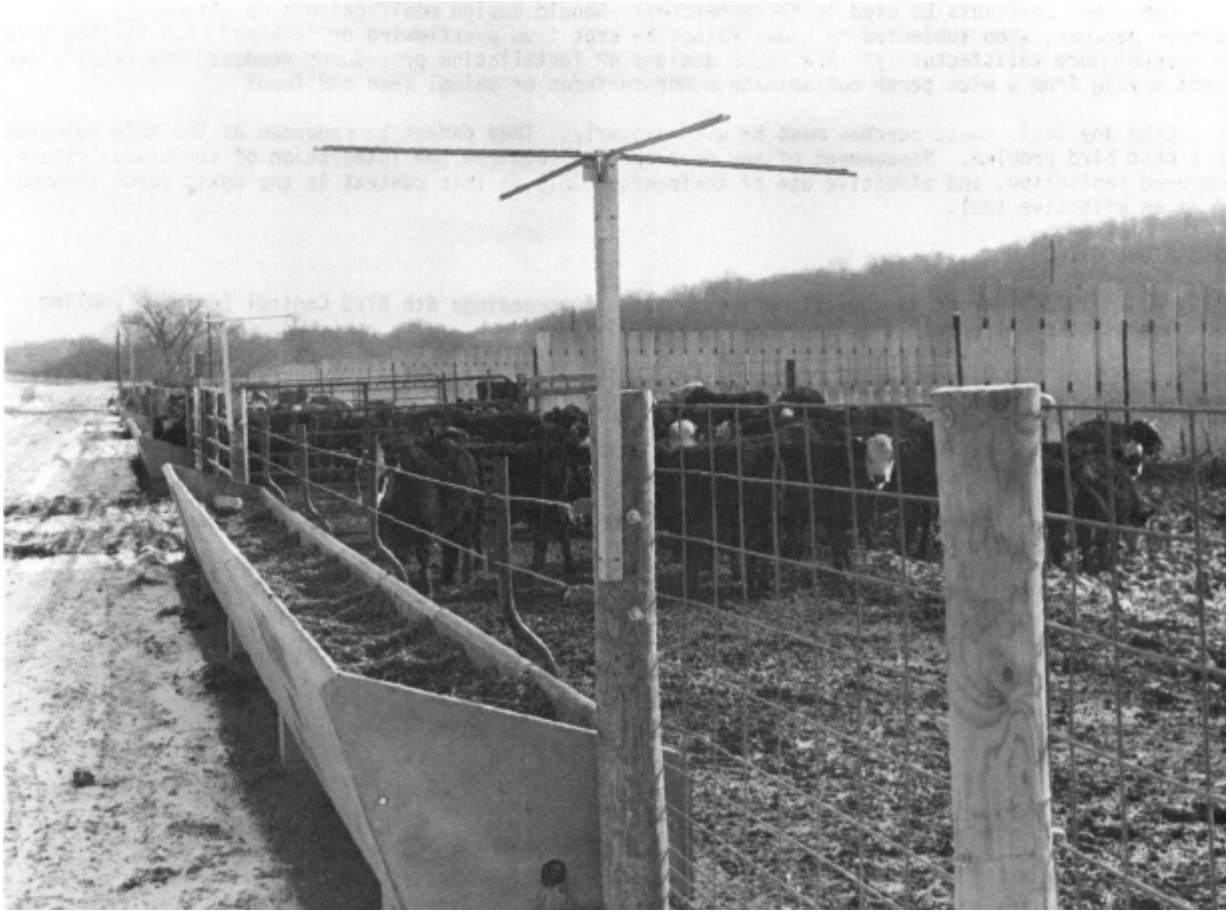

Figure 2.

In a steel mill several hundred pigeons had ready access to roosting areas over its third-of-a-mile length. Perch installation at regular (or even frequent) intervals would have been impractical. Previous attempts at control had been unsuccessful. Several feeding sites were established along one roof. Following installation of a feeder perch, the birds ceased to be a problem.

The Bowling Green University stadium had an active population of about 70 pigeons that roosted on conveniently provided ledges under the stands. Since some of these perches were directly over the refreshment stands, unsightly droppings provided a strong suggestion of contamination and unsanitary conditions. Following installation of perches, both at roosting points under the stadium and on loafing sites on upper surfaces, the population was almost eliminated. A few remaining birds that apparently roosted away from perch installations and had been unaffected were eliminated with an air rifle. Four months later a single immigrant was similarly eliminated.

While both endrin and fenthion are registered by EPA for use in perches, endrin currently is in the RPAR (rebuttable presumption against registration) procedure. It is my understanding that if some uses of endrin are withdrawn, such action is not likely to be taken with perch use.

Repellency resulting from affected birds (after perch contact) eliciting "warning" or "alarm" calls has been cited by Martin and Benson (1976) as a mechanism for moving flocks from a site. However, most PCOs do not consider this to be a significant factor.

Common-sense use cautions (after Knote, 1976) might be enumerated: Mount perch level; keep level; mount with filling holes up; do not overfill perch reservoir; wick should not touch wood, metal, or other building supports; do not mount in trees or vegetation; use protective coveralls, hard hat; handle with synthetic rubber gloves; no food/feed contamination; no water contamination; proper disposal of dead birds; proper disposal of contaminated solutions, solvents; and proper disposal of used containers.

Research on perches until recently has been virtually non-existent. Necessary contact times and dose/contact time relationships are not known with any precision. Knote (1976) comments that 10 to 50 seconds, depending on bird size and species, are required for a lethal dose.

A standard method of test is not yet available. Should a bird's feet be held to a perch for different time intervals, placed in a restraining box and brought into perch contact, or liberated in a flight cage and its contact time with toxic perches determined? Both methods (restrained and free contact) provide different types of information and ought to be developed as preliminary test methods and evaluated.

Can other toxicants be used in these perches? Should design modifications be attempted? Can outdoor perches, when subjected to heavy rains, be kept from overflowing or leaking? Can filling holes be covered more satisfactorily? Are other designs or installation procedures needed? How readily can birds moving from a wick perch contaminate other surfaces or animal feed and food?

Like any tool, toxic perches must be used properly. They cannot be regarded as the sole solution to a pest bird problem. Management of any pest species requires the integration of structural repair, improved sanitation, and effective use of toxicants. Only in this context is the toxic perch recommended as an effective tool.

LITERATURE CITED

DILL, J.J. 1973. Use of perches at refinery sites. Proceedings 6th Bird Control Seminar, Bowling Green State University, Bowling Green, Ohio:133-136.

KNOTE, CHARLES. 1976. Pest bird control. Proceedings 7th Bird Control Seminar, Bowling Green State University, Bowling Green, Ohio: presented but not published.

MARTIN, D.F. and G. BENSON. 1976. Bird control as a profit source. Pest Control Technology (Feb-March):7 pp.

MEESTER, G. 1976. Perches and repellents. Proceedings 7th Bird Control Seminar, Bowling Green State University, Bowling Green, 0hio:102-107.

SANFORD, M.R. 1967. Poisoned perches provide selective and foolproof control of pigeons and starlings. American City (March):2 pp.