University of Nebraska - Lincoln
DigitalCommons@University of Nebraska - Lincoln

Architectural Engineering -- Faculty Publications | Architectural Engineering

1-1-2003

Implementation of the Laboratory Air Handling Unit Systems (LAHU)

Y. Cui
University of Nebraska-Lincoln

Mingsheng Liu
University of Nebraska–Lincoln, mliu2@unl.edu

K. Conger
University of Nebraska-Lincoln

Follow this and additional works at: http://digitalcommons.unl.edu/archengfacpub

Part of the Architectural Engineering Commons

Cui, Y.; Liu, Mingsheng; and Conger, K., "Implementation of the Laboratory Air Handling Unit Systems (LAHU)" (2003). *Architectural Engineering -- Faculty Publications.* Paper 28.
http://digitalcommons.unl.edu/archengfacpub/28

This Article is brought to you for free and open access by the Architectural Engineering at DigitalCommons@University of Nebraska - Lincoln. It has been accepted for inclusion in Architectural Engineering -- Faculty Publications by an authorized administrator of DigitalCommons@University of Nebraska - Lincoln.

Implementation of the Laboratory Air Handling Unit Systems (LAHU)

Y. Cui
Graduate Student
Energy Systems Laboratory
University of Nebraska-Lincoln
Omaha, NE, USA

M. Liu, Ph.D., P.E.
Associate Professor
Energy Systems Laboratory
University of Nebraska-Lincoln
Omaha, NE, USA

K. Conger, P.E.
Energy Project Engineer
Building Systems Maintenance
University of Nebraska-Lincoln
Omaha, NE, USA

ABSTRACT

The LAHU system has been designed, installed, and commissioned in a large university research building. This paper provides detailed information about the demonstration project, including the specific LAHU system mechanical design, optimal airflow control schedules, and measured LAHU energy and indoor air quality (IAQ) performance. The measured energy and IAQ performance are also compared with the conventional operation and theoretical predicated values.

INTRODUCTION

Most laboratory buildings have both office and laboratory spaces. Conventional AHU designs for laboratory buildings use two separate AHUs, one for the office section and another for the laboratory section. The laboratory section AHU uses 100% outside air to satisfy the requirement of the laboratory exhaust airflow rate. The discharge air temperature of the cooling coil is controlled at 55°F (12.8°C) to maintain a suitable humidity level. A significant amount of cooling and heating, especially re-heat, is consumed due to high supply airflow rate required by the fume hood exhaust. At the same time, the office section draws minimal outside air intake to satisfy indoor air quality requirements. The total building outside air intake is higher than necessary, which causes excessive heating and cooling energy consumption.

To improve the energy performance of the conventional systems, a number of energy conservation measures have been developed and implemented in laboratory facilities. These measures are the air-to-air heat recovery heat recovery [1-7], the run-around coils [18, 19], the variable air volume (VAV) fume hoods [8-16] and the usage-based control devices (UBC) [17]. These measures have effectively reduced the cooling energy, preheat energy and fan power consumption, and sometime, improved indoor relative humidity control.

To maximize AHU energy performance efficiency in laboratory buildings and improve office section indoor air quality (IAQ), the Laboratory Air Handling Unit (LAHU) has been developed [20, 21, 22]. The theoretical investigations have found that the LAHU uses less outside air during summer and winter, improves the indoor air quality (IAQ) of the office section, and saves up to 30% of annual thermal energy when the optimal airflow control schedules are used [23].

This paper presents the implementation of the LAHU in a chemistry engineering education facility, which includes the facility and LAHU design and construction information, optimal airflow control schedules implemented, and measured energy savings and indoor air quality improvements.

EXPERIMENT FACILITY

The experimental facility is a three-story chemistry engineering research laboratory building located at Lincoln, Nebraska (See Figure 1). The building has a total floor area of 12,077 m^2 (130,000 ft^2). Figure 2 presents the typical floor layout. Office spaces are on the perimeter of the building with windows. Some offices and classrooms are located in the interior zone. Laboratory spaces are located in the interior zone as well.

Figure 1: Experimental Facility

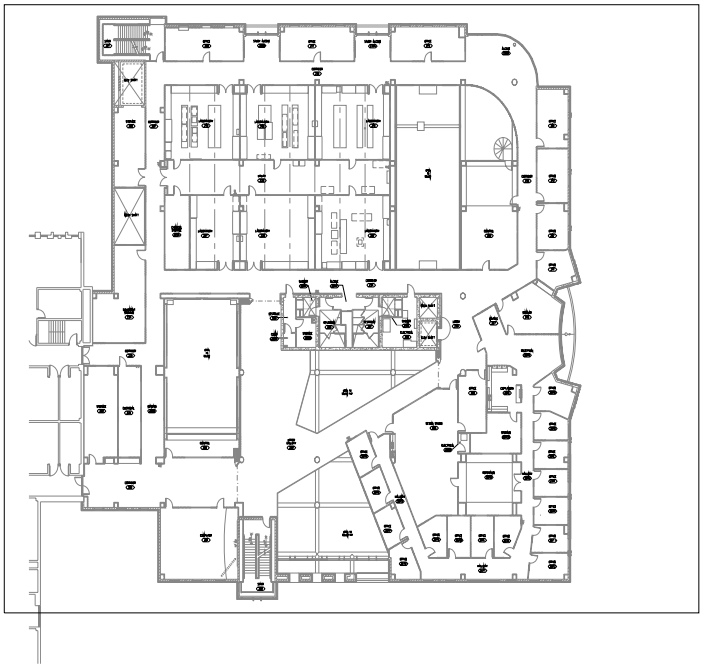

Figure 2: Typical Floor Plan

A total of 28 fume hoods was designed while 23 of them had been installed at the time of the paper was written. The Usage Based Control (UBC) has been installed for each fume hood. The UBC maintains the face velocity at 100 fpm (0.51 m/s) when an operator is present and 60 fpm (0.30 m/s) when the operator is absent. The fume hood airflow is not allowed to be less than 20% of the design airflow regardless of the position of the sash. The current maximum exhaust airflow with existing fume hoods is 29,700 cfm (50,460 m^3/h).

Figure 3 presents the schematic diagram of the LAHU designed and installed in the experimental facility. Four supply air fans (1, 2, 3a and 3b) provide conditioned air to the perimeter, the interior zone other than laboratory spaces, and laboratory spaces, respectively. The fan speeds are modulated by VFDs to maintain the set points of the static pressure in their main supply air ducts. Supply air fan 1 has a design capacity of 46,000 cfm (78,155 m^3/h). Supply air fan 2 has a design capacity of 25,000 cfm (42,474 m^3/h). Supply air fans 3a and 3b work parallel and have a total capacity of 60,000 cfm (101,940 m^3/h). Supply air fan 3a and 3b are installed ahead of the cooling coil 3 (CC3) instead of after the cooling coil because the total supply airflow of the office and classroom sections is expected to be higher than the supply air airflow of the laboratory section. This modification reduces the system cost and simplifies the optimal control.

Two return air fans draw return air back from the interior and exterior office and classroom areas and send back to the four supply air fans. The return air distribution to each supply air fan is modulated using two sets of outside air and return air dampers (FAD1 and RAD1, FAD2 and RAD2), two release air dampers (EAD1 and EAD2) and two transfer air dampers (TAD1 and TAD2) based on the optimal airflow distribution control sequence.

Seventeen temperature sensors are installed to measure air temperature entering and leaving heat recovery coils, inside the mixed air chambers, leaving preheat coils, leaving cooling coils, and entering return air fans. Eight relative humidity sensors are installed to measure air relative humidity level entering heat recovery coils, leaving cooling coils, and entering return air fans. Three CO_2 sensors are installed to measure zone leaving air CO_2 concentrations. One static pressure sensor is set to monitor the static pressure in the mixed air chamber of laboratory section outside air and return air from return air fan 2 (RF2) relative to the outside airflow before the heat recovery coil 3 (HR3). Three other static pressure sensors are installed

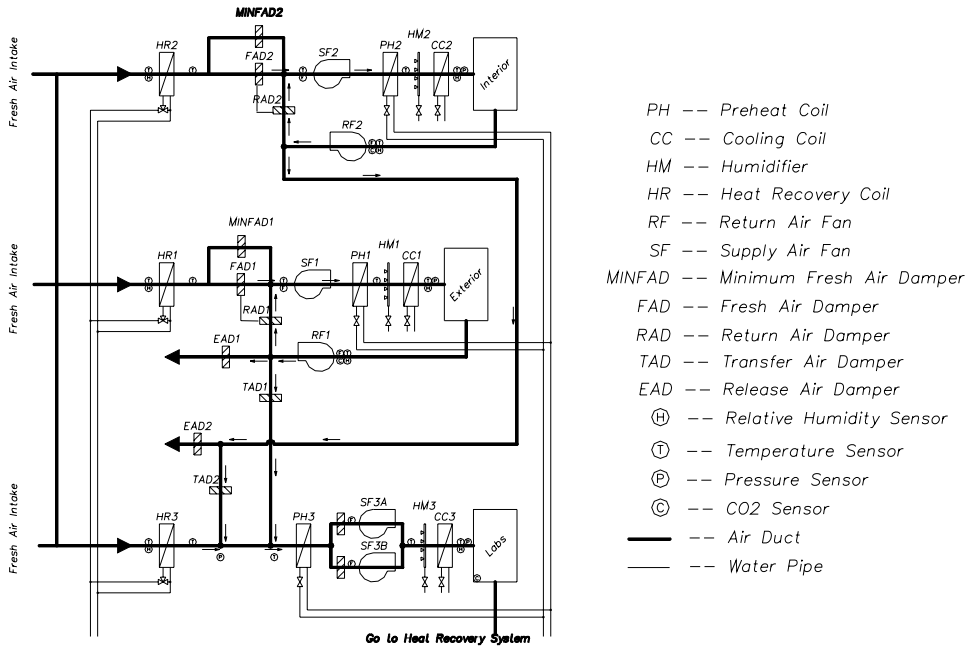

Figure 3. Schematic Diagram of Major HVAC Systems

in the downstream of each cooling coil. The airflow through each fan is measured using fan inlet airflow station. A constant volume air-to-air heat recovery system is designed to transfer heat between the exhaust air and the outside air.

A modern EMCS system is installed to monitor and control the LAHU system and other associated HVAC systems.

OPTIMAL AIRFLOW CONTROL SCHEDULES

The optimal airflow control schedules have been developed for LAHU systems under general conditions [23] and given supply air temperatures. The optimal airflow control for the experiment facility is presented in Figure 4, which was developed by customizing the general optimal schedules.

The control system judges the operation mode based on the monitored air conditions leaving the heat recovery coils and the return air conditions. If the heat recovery discharge air temperature and enthalpy for the perimeter office spaces is lower than the return air temperature and enthalpy respectively, the operation is in economizer mode. Otherwise, the operation is in non-economizer mode.

In economizer mode, when the total fresh air intake of the office and classroom sections is higher than the return airflow requirement of the laboratory spaces, economizers are controlled independently for each supply air fan. Otherwise, control the total fresh air of the office and classroom sections at the return air airflow of the laboratory section. This control sequences minimize total thermal energy consumption and maximize the IAQ of the office and classroom sections. The IAQ is also sufficiently maintained at the acceptable level. To implement this optimal control, the control system first tries to maintain the mixed air temperatures of supply air fans 1 and 2 at their set points by modulating the outside air dampers (FAD1 and FAD2), and to maintain the mixed air temperature of supply air fans 3a and 3b by modulating transfer air dampers (TAD1 and TAD2). The mixed air temperature set point is defined as the supply air temperature minus the fan temperature rise.

The release air dampers 1 and 2 (EAD1 and EAD2) are reversely interlined with the transfer air dampers 1 and 2 respectively. When the transfer air damper is full open, the release air damper is closed. If the transfer air dampers are full open and the mixed air temperature of supply air fans 3a and 3b is still lower than the set point, the return airflow from the office section is not enough for the laboratory section. Consequently, set the mixed air temperature of

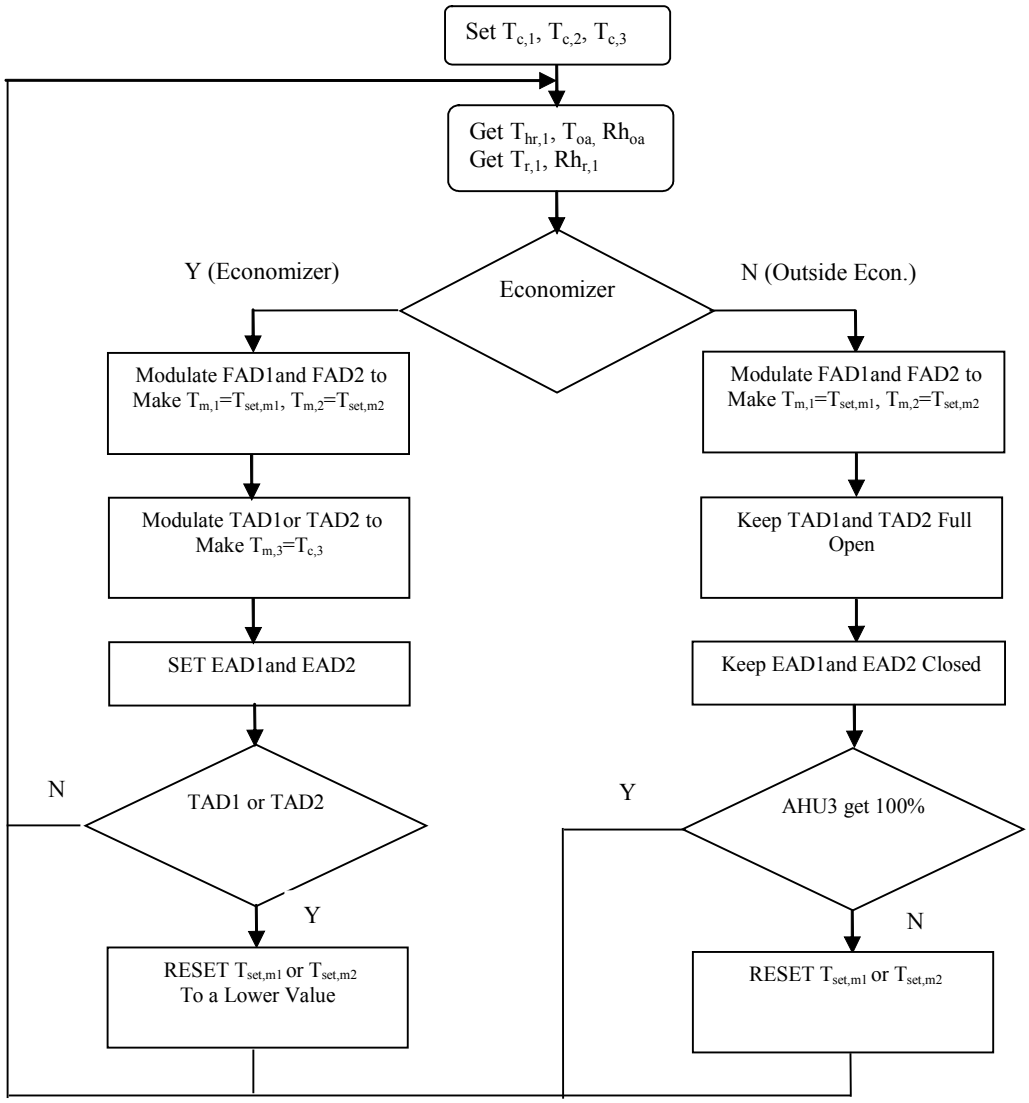

Figure 4: Control Procedures of the Optimal Airflow Distribution Schedules

the office section at lower value to force more outside air intake to the office section.

In non-economizer mode, the total fresh air intake of the office section should be controlled at the airflow of supply air fans 3a and 3b provided the total airflow of the office section is higher than the airflow of the laboratory section. Otherwise, the office section should use 100% outside air.

To implement this principal of optimal airflow control, the control system sets the transfer air dampers at full open and relief air dampers closed since the laboratory section airflow is always higher than the minimum airflow required than the office section. If the static pressure in the mixed air chamber of outside airflow and return air flow from fan RF2 is less than the set point of +0.05 inH_2O (adjustable, slightly higher than 0.0 inH_2O), close return air dampers 1 and 2 (RAD1 and RAD2) more to force more outside air flow to supply air fans 1 and 2 (SF1 and SF2). If the static pressure is higher than the set point, open the return air dampers 1 and 2 more to reduce outside air intake to supply air fans 1 and 2. In this case, the laboratory section uses 100% return air.

When both return air dampers 1 and 2 are closed and the static pressure of the mixed air

chamber is still less than the set point, outside air is drawn automatically into the mixed air chamber for supply air fans 3a and 3b. In this case, the office and classroom sections receive 100% outside air.

The total outside air intake of the building equals the summation of the exhaust air of the laboratory section, and the common exhaust and the air ex-filtration of the office and classroom sections. The release airflow of the two sections is zero. Therefore, the LAHU uses less fresh air than the conventional design.

The optimal control sequences are developed based on the given heat recovery system operation sequences. Heat recovery system is kicked on when the outside air temperature is higher than 83˚F (28.3˚C) or lower than 55˚F (12.8˚C) and shut off otherwise. Each heat recovery control valve is modulated to control its discharge air temperature at the set point of mixed air temperature for each supply air fan. The interactions of the heat recovery control sequence and the outside airflow intake control is not considered in this case.

RESULTS

Two sets of control sequences are developed and implemented in the EMCS system. One set of the control sequences is the optimal control sequence described in the last section. This is called the LAHU case. The other set of the control sequences is the optimal control sequences with the following constraints: (1) return fan 1 serves supply air fan 1 only; (2) return air fan 2 serves the supply air fan 2 only; (3) supply air fan 3a and 3b receive 100% outside air. This is called the base case, where the system is operated as a conventional system for laboratory buildings.

In both the LAHU and the base cases, the supply air temperature set points for supply fans 1 and 2 are the same. In the LAHU case, the supply air temperature set point of supply air fans 3a and 3b is 60F. In the base case, it is set at 55F for room relative humidity control. In both the LAHU and the base cases, the heat recovery system is controlled under the same schedule.

Test Results for Economizer Operation

The LAHU system hourly economizer operation was tested and recorded between 9:00 a.m. on April 7, 2003, and 10:00 a.m. on April 9, 2003, when the cold deck was set to 55˚F (12.8°C) for all three units. The recorded airflow rate during this period was around 30,000 CFM, 20,000 CFM and 26,000 CFM respectively for AHU1, AHU2 and AHU3. The test shows that these three units all maintained the mixed air temperature at each set point. Therefore, AHU3 consumed no preheat. The preheat energy savings of the LAHU operation over the outside air temperature, compared with the normal operation where AHU1 and AHU2 use economizer and AHU3 takes 100% outside air, is then calculated and presented in Figure 5 for this operation period. Since exhaust fumehoods have not been fully equipped as design so far, the AHU3 total supply airflow rate is not high and subsequent supply air temperature is not high. However, the supply air temperature will be higher than the current set after all the fumehoods are installed due to high ventilation requirement. Therefore, the test also shows the preheat energy savings when AHU3 cold deck set point is 60˚F (15.6°C) in Figure 5. The preheat savings agrees exactly with the predicted optimal energy savings since the optimal schedules are obtained in the operation with the measurement bias. This test demonstrates that the energy savings of the LAHU operation will be about 420 MMBtu (443.0E6 KJ) and 820 MMBtu (865.0E6 KJ) with cold deck set point 55˚F (12.8°C) and 60˚F (15.6°C) separately over the outside air temperature between 20˚F (-6.7°C) and 40˚F (4.4°C) which account for 2,800 hours of yearly 8,760 hours [24]. In fact, as AHU3 supply air flow rate increases with the installation of more fumehoods, the savings will be higher.

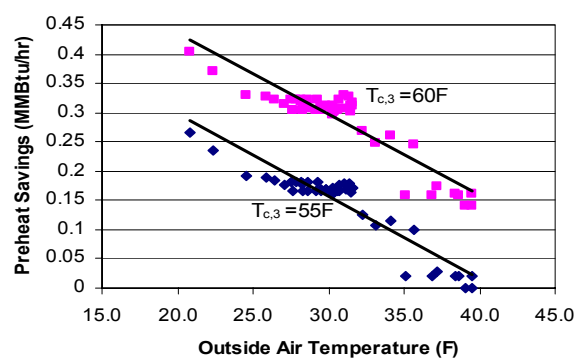

Figure 5: Preheat Energy Savings for LAHU Economizer Operation

The discharge air pressure for the three AHUs during the LAHU operations is illustrated as Figure 6. The set points are 1.6” and 2.0” for

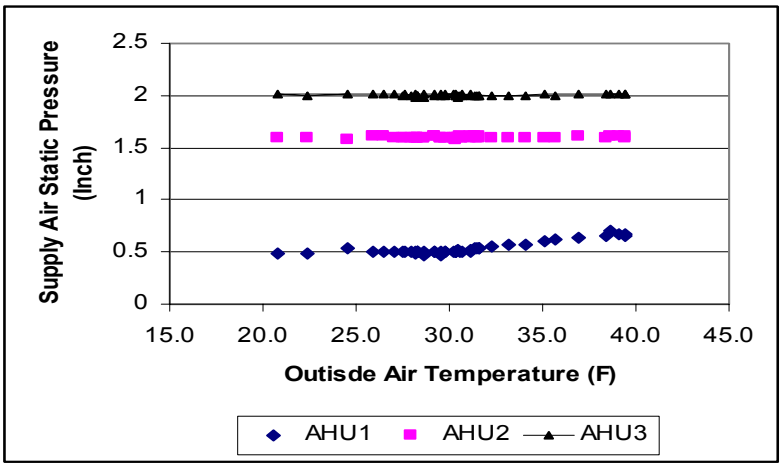

Figure 6: Static Pressure for LAHU Economizer Operation

AHU2 and AHU3. The set point for AHU1 is linearly reset between 0.5" and 2.0" when outside air temperature is 30F and 100F. Figure 6 clear shows that the integrated LAHU system can maintain stable static pressure set point.
AQ for AHU1 and AHU2 kept the same as the normal operation since the economizer is used in both the normal and LAHU operation under the airflow rate at that time.

Test Results for Non-Economizer Operation

The LAHU optimal airflow control programs are being tested for the Non-economizer operations. The primary results have proved the feasibility of the optimal LAHU operation and shown the potential thermal energy savings and the improved IAQ predicted by the theoretical optimal schedules. The test shown below was conducted between 5:00p.m. and 8:30p.m. on July 1, 2003. The LAHU operation data were recorded on 6:20p.m. The normal operation data were recorded on 8:30 when the system kept stable after it was switched back to the normal operation from the LAHU operation. The data are listed on Table 1, where AHU3 supply air temperature is 55˚F (12.8°C).

Table 1 Comparison of Normal and LAHU Operation for the Outside Economizer Operation

Condition		AHU1	AHU2	AHU3
Fresh Air Temp (˚F) / HR Disch. Air Temp(˚F)	Normal	86.8/80.2	83.5/80.2	85.7/80.8
	LAHU	90.8/82.1	89.5/83.3	90.4/80.1
Return Air Temp (˚F)	Normal	74.7	72.3	75.7
	LAHU	74.7	72.3	75.7
Mixed Air Temp (˚F)	Normal	77.6	76.2	80.2
	LAHU	79.6	83.9	73.8
Outside Air Damper Position/transfer damper	Normal	5%/ 2%	4%/ 2%	100%/
	LAHU	18%/ 98%	87%/ 99%	100%/
Cooling Coil Valve Position	Normal	30.8%	27.5%	31.5%
	LAHU	37.8%	33.2%	19.7%
Supply Airflow Rate (CFM)	Normal	34,132	20817	29,869
	LAHU	37,869	20,377	28,327
Fresh Air CO_2 (ppm) /Return Air CO_2 (ppm)	Normal	418/371	418/377	/
	LAHU	428/375	428/381	/

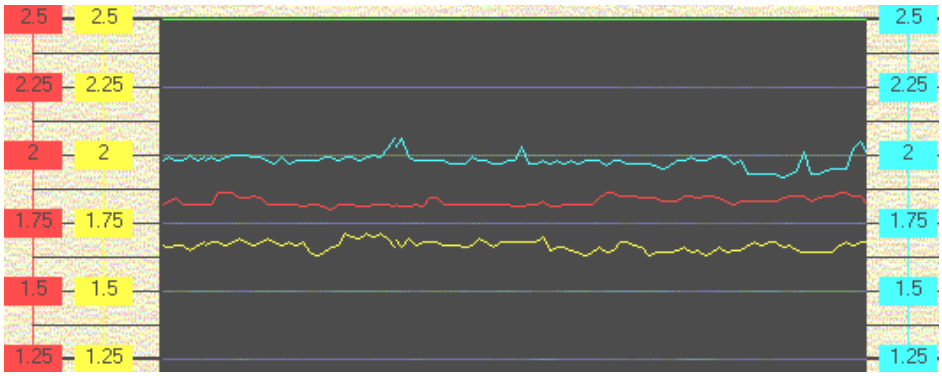

Figure 7: Supply Air Static Pressure of AHU1, AHU2 and AHU3 in LAHU Operation (Unit: Inch WCI)

It needs attention that the return air temperature sensor is located in the inlet of the return air fans of the AHU1 and AHU2. The transfer air temperature dampers are full open for LAHU operation, and the outside air dampers of AHU1 and AHU2 were partially open at different positions. AHU3's mixed air temperature indicates that AHU3 used 100% return air. The cooling energy savings is calculated to be over 20%. Accordingly, AHU3 reheat energy can then be saved 0.16MMBtu/hr (46.88KW) when supply air temperature increase to 60˚F from 55˚F (12.8°C) and 0.32MMBtu/hr (93.76KW) when supply air temperature increase to 65˚F from 55˚F (12.8°C). With the test AHU3 supply air flow rate 29,869 cfm (50,747m^3/h), the annual reheat savings will be 340 MMBtu (358.6E6 KJ) situation and 680MMBtu (712.7E6 KJ) with supply air temperature 60˚F (12.8°C) and 65˚F (15.6°C) separately when outside air temperature is higher than 72˚F (22.2°C) which account for 2,100 hours of yearly 8,760 hours [24]. As laboratory has higher exhaust, the reheat and cooling savings will be higher. The IAQ improvement is not obvious because of low occupancy in the building during the test. The data also show that the room IAQ of the office sections is better in the LAHU operation relative to the simultaneous outside air CO2 (the reason the outside air CO2 concentration is higher than the return air is due to different sensor accuracy). The value of AHU1's and AHU2's return air CO2 concentration was a little lower in normal operation due to low occupancy and lower outside air intake.

Discharge air static pressure stability was demonstrated as Figure 7 after LAHU operation was stable, where the discharge air pressure set point was 1.7", 1.6" and 2.0" for AHU1, AHU2 and AHU3 separately. The three records in Figure 6 are the discharge air pressure AHU3, AHU1 and AHU2 from the top to the bottom. It shows that stable pressure can be maintained for LAHU operations.

To test the room humidity level results from high cold deck set point, AHU3 cold deck set point was adjusted to 55˚F (12.8°C), 60˚F (15.6°C) and 65˚F (18.3°C). The AHU3 room air relative humidity was recorded as 55%, 58%, and 59%. This test proves that high cold deck set point 65˚F (18.3°C) will increase room relative humidity by around 4% compared with the cold deck set point 55˚F (12.8°C), which indicates that high cold deck set point will not cause humidity problem for AHU3 lab section.

More tests are being conducted on the chilled water and reheat energy savings hourly measurement and IAQ improvement.

CONCLUSIONS

The implementation of the LAHU system in the research facility shows that the optimal LAHU system works not only theoretically but also in practice in modern laboratory building automation systems. The implementation principal used for this facility is applicable to any laboratory building with specific control details considering the local weather and mechanical system characters.

The implementations of LAHU system in this typical size laboratory building can save significant preheat in economizer operation as well as reheat and cooling in non-economizer

operation under the optimal airflow control as projected by theoretical analysis. IAQ of office section can be improved. The LAHU system can maintain stable supply air pressure control and room comfort requirement.

The implementation proves that the LAHU system is an applicable energy and IAQ efficient system for laboratory buildings.

NOMENCLATURE

T = Air temperature (°F or °C)

h = Enthalpy (Btu/lb or KJ/Kg)

P = Static Pressure (Inch Water or Pa)

Subscripts

oa = Outside air

c = Cold deck

hr = Heat recovery discharge air

m = Mixed air

r = Return air

set = Set point

$,1$ = Exterior Office Section

$,2$ = Interior office and classroom section

$,3$ = Laboratory section

ACKNOWLEDGMENT

The authors would like to express the appreciation to Ms. Derrick for her editing assistant.

REFERENCES

[1] Sauer, H. J., and Howell, R. H., 1981, "Promise and Potential of Air-to-Air Recovery Systems," ASHRAE Transactions, Vol. 87, Part 1, pp. 167-182.

[2] Barker, P. L., 1994, "Biomedical Laboratory Uses VAV Fume Hoods and Heat Recovery to Save Fuel Costs," ASHRAE J., 36(3), pp. 41-43.

[3] Bard, E. M., 1994, "Energy Efficient HVAC System Features Thermal Storage and Heat Recovery," ASHRAE J., 36(3), pp. 38-40.

[4] Lacey, D. Randall and Smith, Darin C., 1997, "Innovative Ventilation System for Animal Anatomy Laboratory," ASHRAE Journal, 39(4), pp. 65-67.

[5] Carnes, L., 1988, "Air-to-Air Heat Recovery Systems for Research Laboratories," ASHRAE Transactions, Vol. 90, part 2A, pp. 327-340.

[6] Moyer, R. C., 1978, "Energy Recovery Performance in the Research Laboratory," ASHRAE Transactions, Vol. 84, Part 1, pp. 538-546.

[7] Streets, R. A., and Setty, B. S. V., 1983. "Energy Conservation in Institutional Laboratory and Fume Hood Systems," ASHRAE Transactions, Vol. 89, pp. 542-551.

[18] Hill, J. M., and Jeter, S. M., 1994, "The Use of Heat Pipe Heat Exchangers for Enhanced Dehumidification," ASHRAE Transactions, Vol. 100, Part 1, pp. 91-102.

[19] Scofield, C. Mike., 1993, "Low Temperature Air with High IAQ for Tropical Climate," ASHRAE J., 35(3), pp. 52-59.

[8] Boldt, Jeffrey G., 1993, "Separate HVAC systems maximize energy efficiency," ASHRAE Journal, 35(4), pp. 16-19.

[9] Bard, E. M., 1995, "Laboratory Integrates VAV Fume Hood Controls with Central Building Automation System," ASHRAE Journal, 37(3), pp. 40-42.

[10] Murry, H. J., 1983, "The effect of load diversity on HVAC costs," ASHRAE Transactions, Vol. 89, Part 1B, pp. 150-154.

[11] Davis, S. J., and Benjamin, R., 1987, "VAV with Fume Hood Exhaust System," Heating/Piping/Air Conditioning, 59(8), pp. 75-78.

[12] Moyer, R. C., and Dungan, J. O., 1987, "Tuning Fume Hood Diversity into Energy Savings," ASHRAE Transactions, Vol. 93, Part 2, pp. 1822-1832.

[13] Lentz, M. S., and Seth, A. K., 1989, "A Procedure for Modeling Diversity in Laboratory VAV Systems," ASHRAE Transactions, Vol. 95, Part 1, pp. 113-120.

[14] Parker, J. A., Ahmed, O., and Barker, K. A., 1993, "Application of Building Automation System (BAS) in Evaluating Diversity and Other Characteristics of a VAV Laboratory," ASHRAE Transactions, Vol. 99, pp. 1081-1089.

[15] Rabiah, T. M., and Welkenbach, J. W., 1993, "Determining Fume Hood Diversity Factors," ASHRAE Transactions, Vol. 99, Part 2, pp. 1090-1096.

[16] Bard, E. M., 1995, "Laboratory Integrates VAV Fume Hood Controls with Central Building Automation System," ASHRAE J., 37(3), pp. 40-42.

[17] Phonenix Controls Corporation, Laboratory Source Book.

[20] Cui, Y., and Liu, M., 2001, "Laboratory Air handling Unit System," Proceedings of International Conference for Enhanced Building Operation, Austin, TX, pp. 17-24.

[21] Cui, Y., and Liu, M., 2002, "Optimal Airflow Control for Laboratory Air Handling (LAHU) Systems," Thirteenth symposium on Improving Building Systems in hot and Humid Climates, Houston, TX.

[22] Boldt, Jeffrey G., 1993, "Separate HVAC systems maximize energy efficiency," ASHRAE Journal, 35(4), pp. 16-19.

[23] Cui, Y., and Liu, M., 2003, "Optimal Airflow Control of Laboratory Air Handling Unit

(LAHU) Systems," Journal of Solar Energy, in review.

[24] Degelman, L., 1986, Bin Data Weather, American Society of Heating, Refrigerating and Air-Conditioning Engineers, Inc., Atlanta.