University of Nebraska - Lincoln
DigitalCommons@University of Nebraska - Lincoln

Faculty Publications from the Department of Electrical Engineering

Electrical Engineering, Department of

12-13-1994

United States Patent: Ellipsometer

John A. Woollam
Lincoln, Nebraska

Blaine D. Johs
Lincoln, Nebraska

David W. Doerr
Lincoln, Nebraska

Reed A. Christenson
Lincoln, Nebraska

Follow this and additional works at: http://digitalcommons.unl.edu/electricalengineeringfacpub

Part of the Electrical and Computer Engineering Commons

Woollam, John A.; Johs, Blaine D.; Doerr, David W.; and Christenson, Reed A., "United States Patent: Ellipsometer" (1994). *Faculty Publications from the Department of Electrical Engineering.* Paper 29.
http://digitalcommons.unl.edu/electricalengineeringfacpub/29

This Article is brought to you for free and open access by the Electrical Engineering, Department of at DigitalCommons@University of Nebraska - Lincoln. It has been accepted for inclusion in Faculty Publications from the Department of Electrical Engineering by an authorized administrator of DigitalCommons@University of Nebraska - Lincoln.

US005373359A

United States Patent [19]

Woollam et al.

[11] Patent Number: 5,373,359

[45] Date of Patent: Dec. 13, 1994

[54] **ELLIPSOMETER**

[75] Inventors: **John A. Woollam; Blaine D. Johs; David W. Doerr; Reed A. Christenson,** all of Lincoln, Nebr.

[73] Assignee: **J. A. Woollam Co.,** Lincoln, Nebr.

[21] Appl. No.: **947,430**

[22] Filed: **Sep. 18, 1992**

[51] **Int. Cl.**[5] **G01J 3/447;** G01N 21/21

[52] **U.S. Cl.** **356/328;** 356/369

[58] **Field of Search** 356/367, 364, 369, 300, 356/319, 323, 326, 325, 328, 329, 331, 332, 334

[56] **References Cited**

U.S. PATENT DOCUMENTS

2,837,959	6/1958	Saunderson et al.	356/329
3,846,024	11/1974	Turner	356/326
4,227,079	10/1980	Dukes et al.	356/326
4,571,074	2/1986	Thevenon	356/328
4,606,641	8/1986	Yamada et al.	356/369

FOREIGN PATENT DOCUMENTS

49822	3/1982	Japan	356/319
8300257	1/1983	WIPO	356/326

Primary Examiner—F. L. Evans

Attorney, Agent, or Firm—Vincent L. Carney

[57] **ABSTRACT**

To sense characteristics of a sample, an ellipsometer includes a pivotal diffraction grating positioned to receive white light from the analyzer without further focusing of the light after the light leaves the sample. The diffraction grating is focused on the sensor at a predetermined angle with a precision of at least plus or minus one-half degree using an alignment-sensing means positioned between the analyzer and diffraction grating. The sensor includes an aperture through which the incident beam of light is transmitted, light-sensitive areas on opposite sides of said sensor and a comparator for comparing the signal from said light-sensitive areas. Equality of the light from the light-sensitive areas indicates that the incident beam of light is perpendicular to the diffraction grating. A second diffraction grating and a second sensing means may receive the specularly reflected white light from a first diffraction grating and reflect it to another diffraction grating to investigate another spectrum of light. A spectroscopic ellipsometer uses a stacked photodiode in which the first photodiode and second photodiode have overlapping spectral ranges.

15 Claims, 5 Drawing Sheets

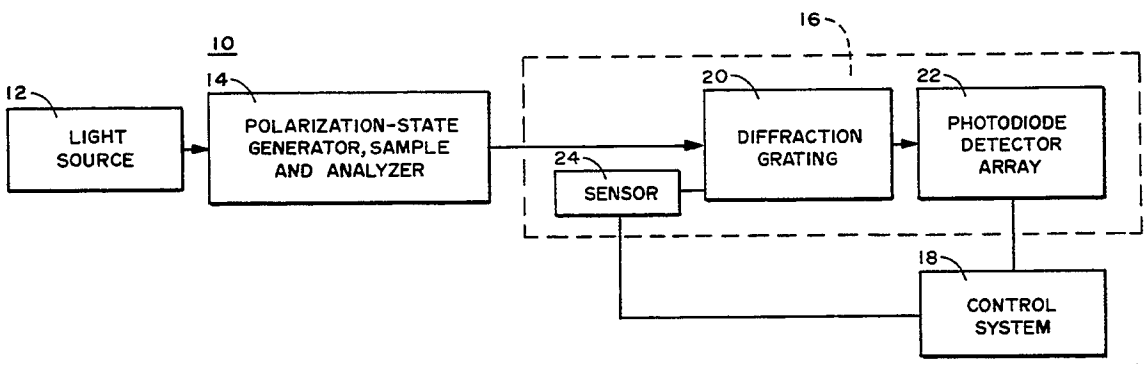

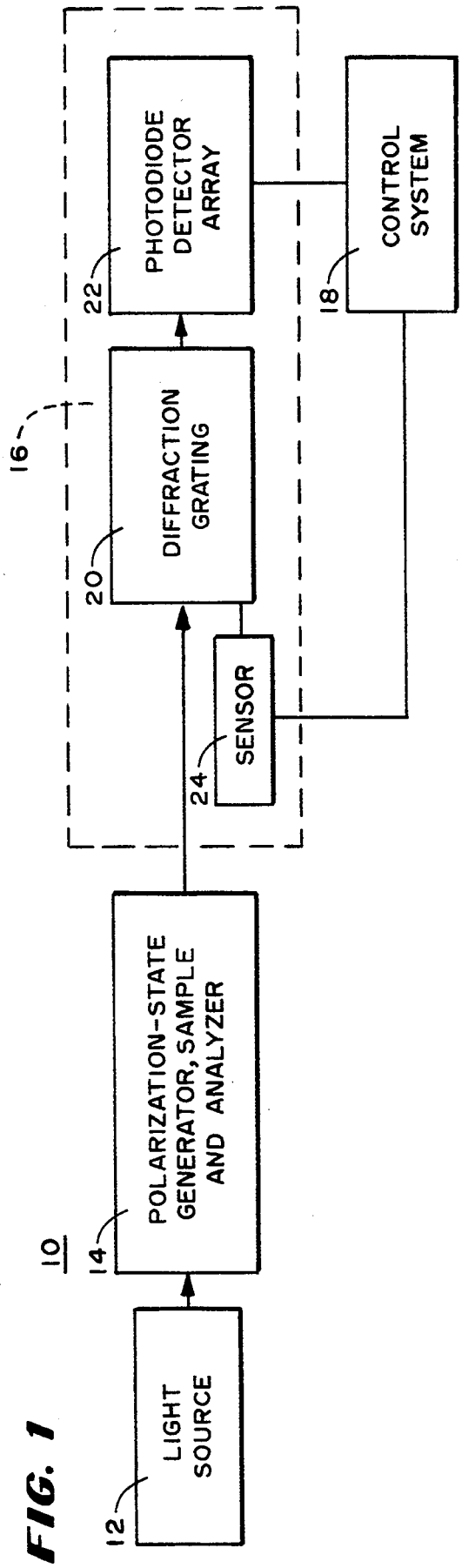
10
LIGHT SOURCE
12
POLARIZATION-STATE GENERATOR, SAMPLE AND ANALYZER
14
16
DIFFRACTION GRATING
20
SENSOR
24
PHOTODIODE DETECTOR ARRAY
22
CONTROL SYSTEM
18

FIG. 1

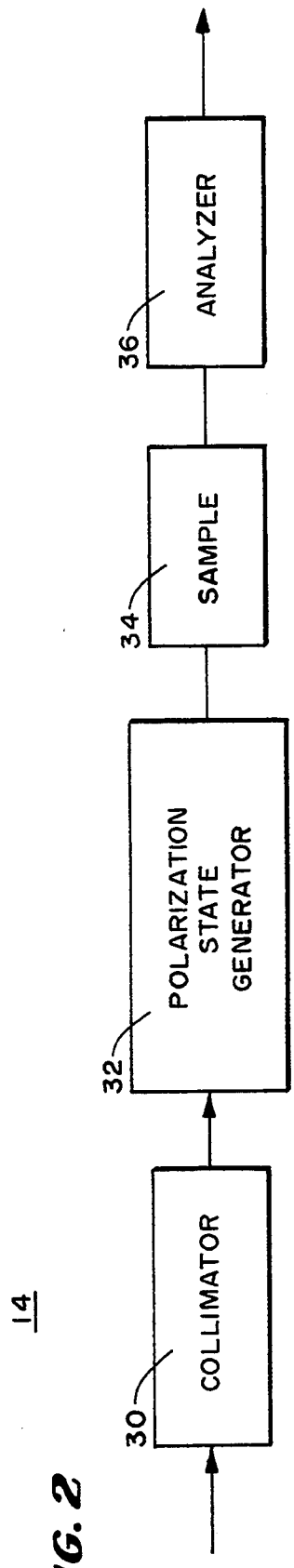
14
COLLIMATOR
30
POLARIZATION STATE GENERATOR
32
SAMPLE
34
ANALYZER
36

FIG. 2

FIG. 3

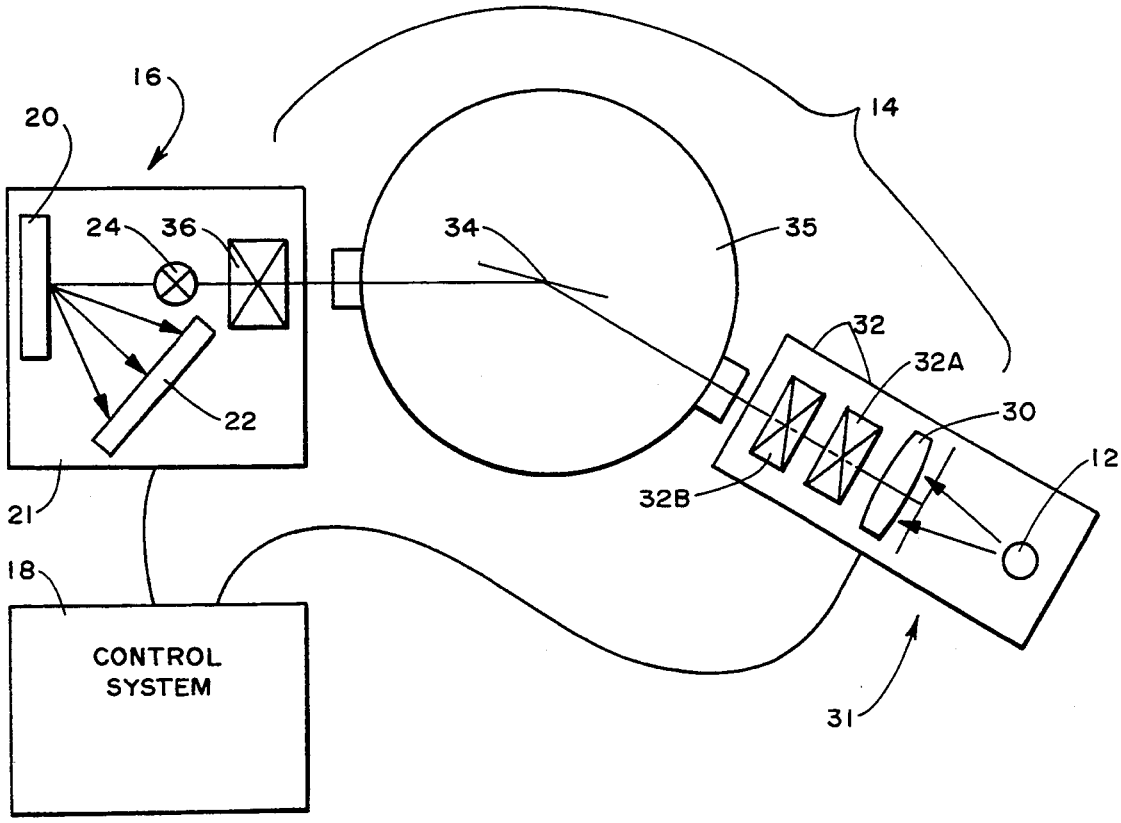
16
20
24
36
34
35
14
32
32A
30
12
22
21
32B
18
CONTROL SYSTEM
31

FIG. 4

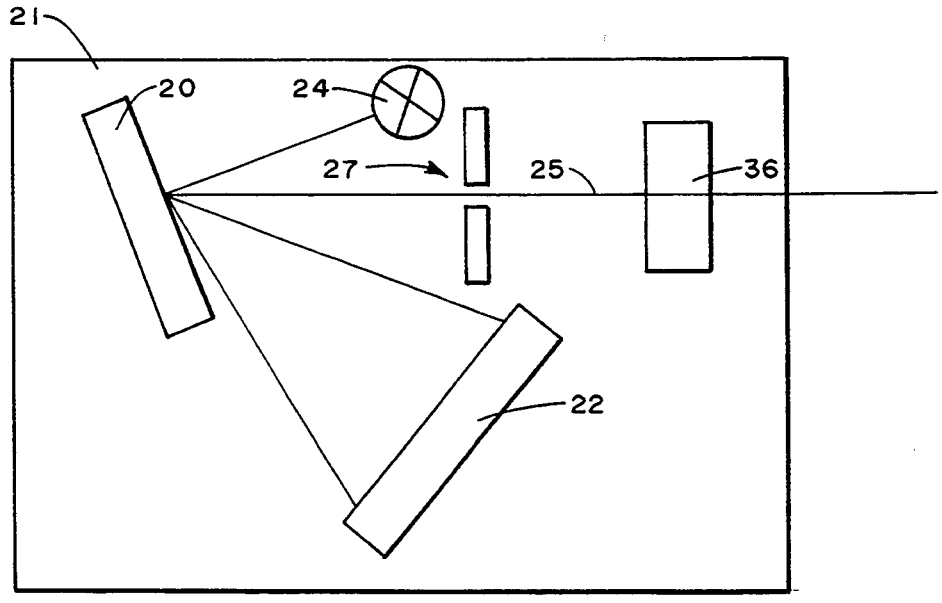
21
20
24
27
25
36
22

FIG. 5

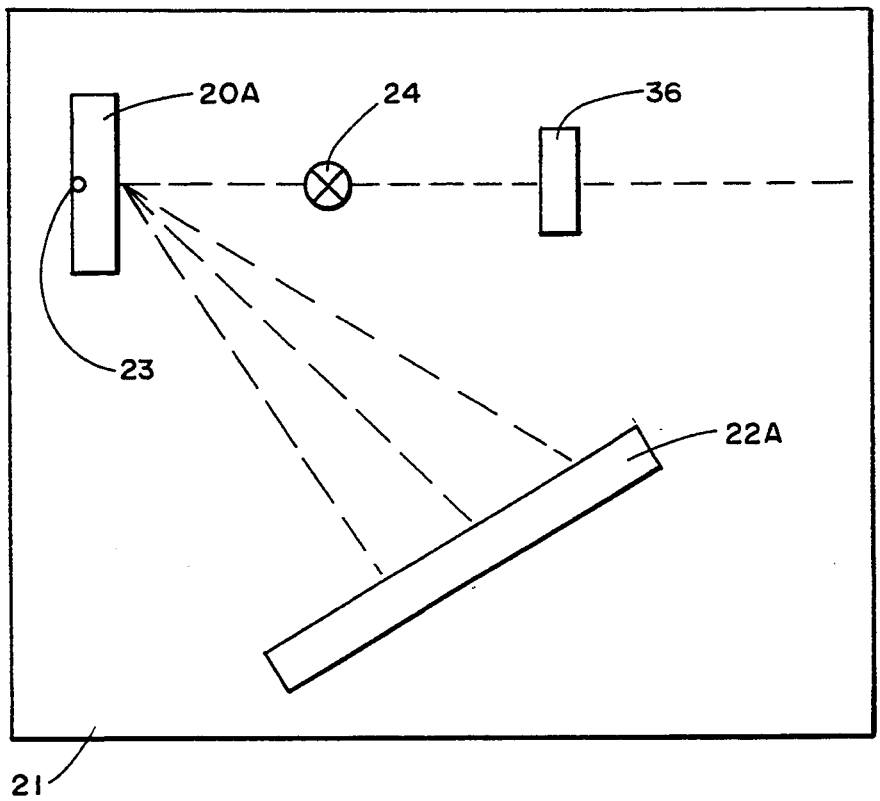

FIG. 6

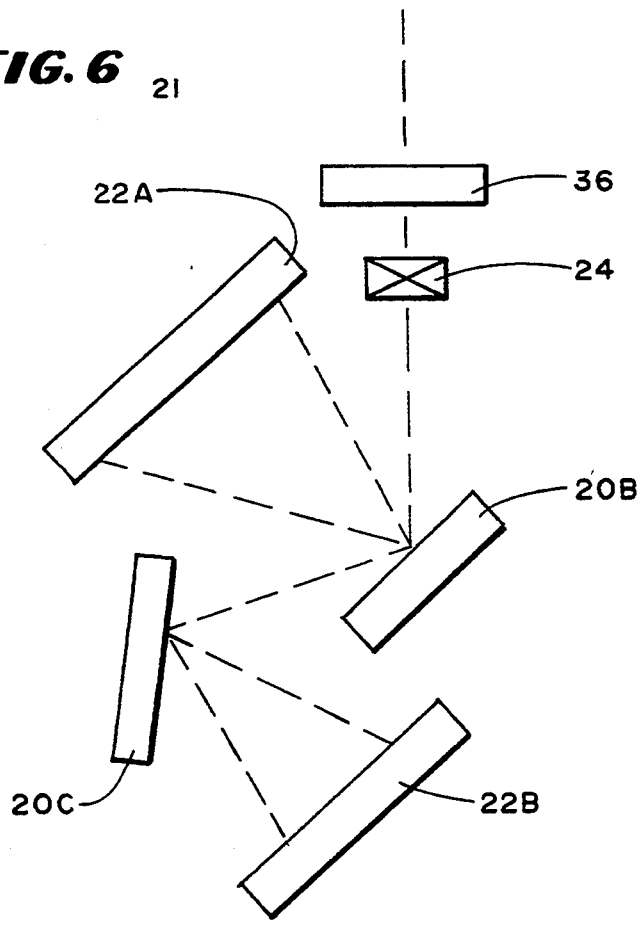

FIG. 7

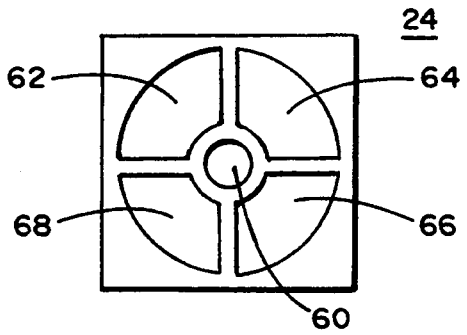

FIG. 8

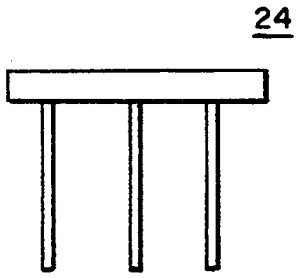

FIG. 9

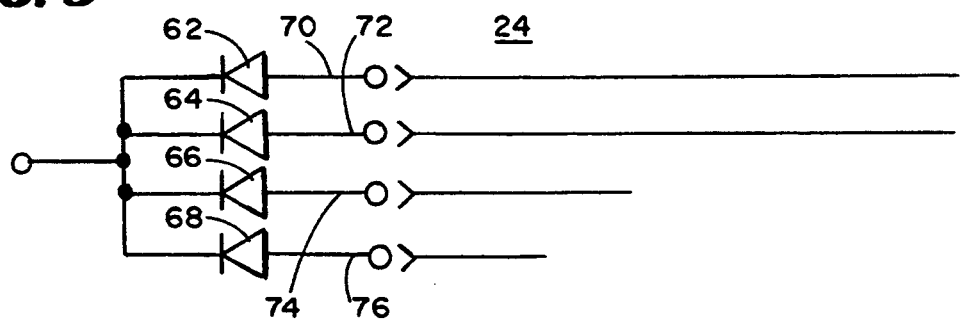

FIG. 10

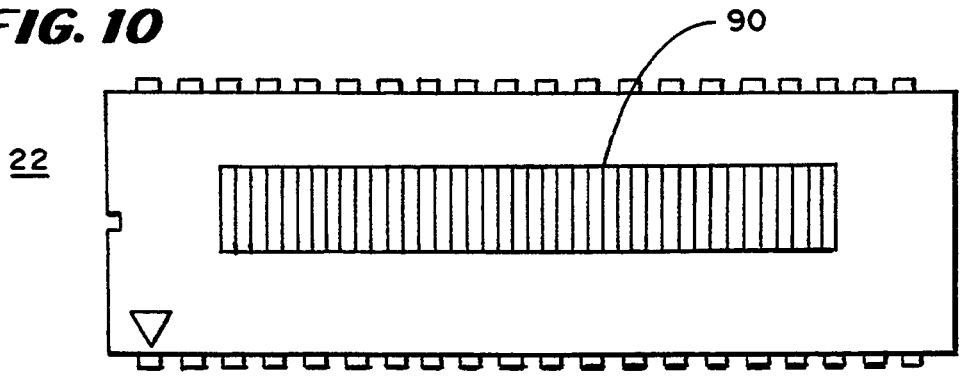

FIG. 11

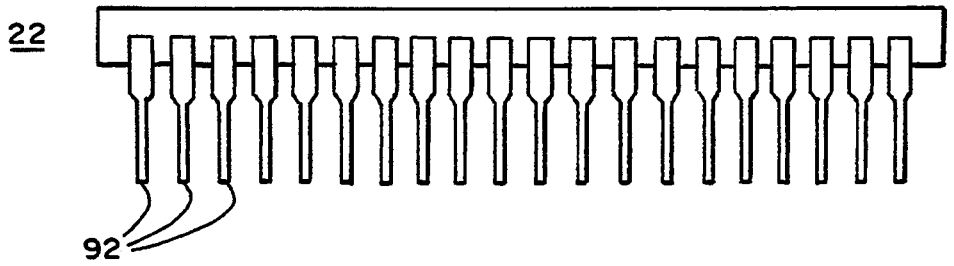

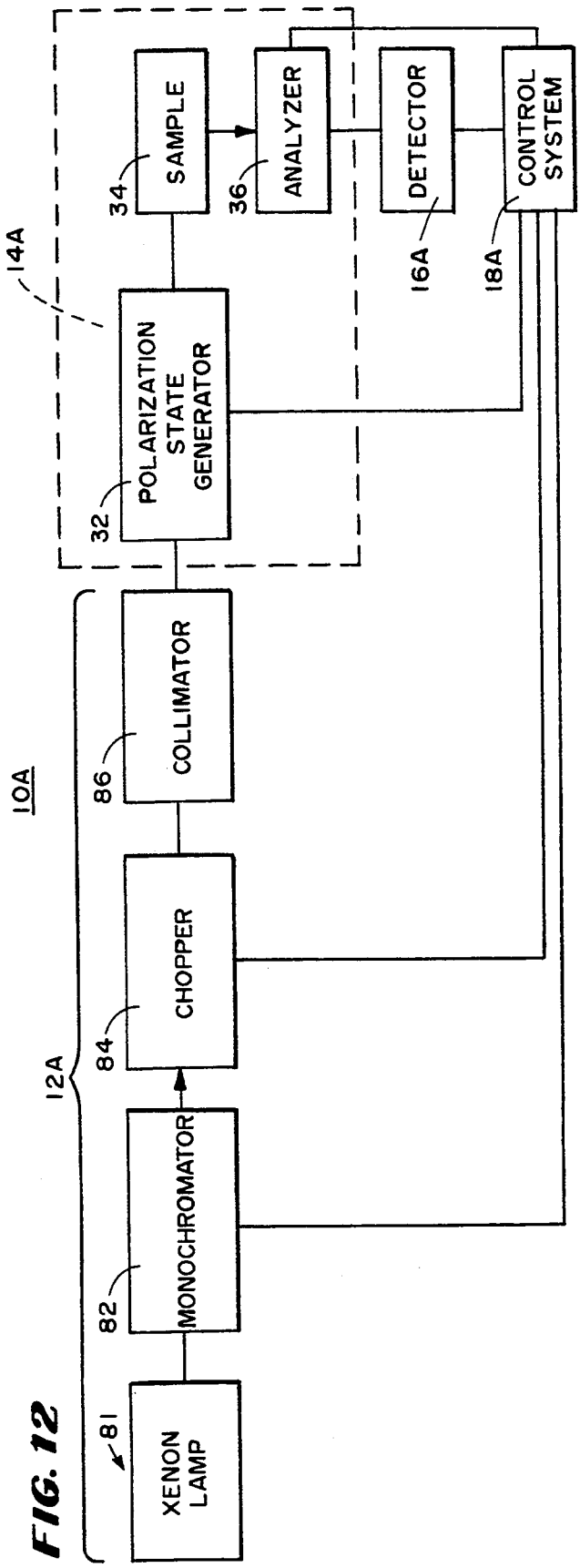
XENON LAMP
81
MONOCHROMATOR
82
CHOPPER
84
COLLIMATOR
86
POLARIZATION STATE GENERATOR
32
SAMPLE
34
ANALYZER
36
DETECTOR
16A
CONTROL SYSTEM
18A
10A
12A
14A

FIG. 12

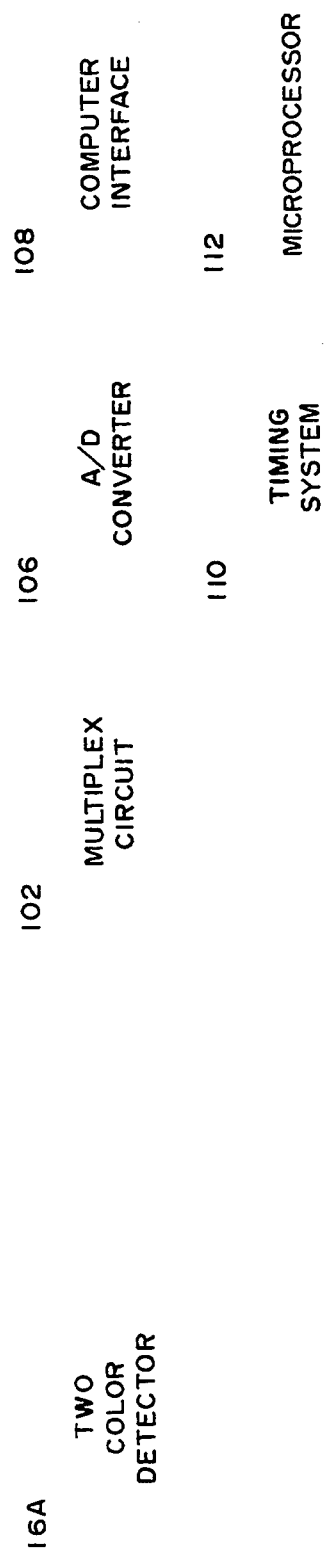
18A
108
COMPUTER INTERFACE
112
MICROPROCESSOR
106
A/D CONVERTER
110
TIMING SYSTEM
102
MULTIPLEX CIRCUIT
16A
TWO COLOR DETECTOR

FIG. 13

ELLIPSOMETER

BACKGROUND OF THE INVENTION

This invention relates to spectroscopic ellipsometers and methods of ellipsometry.

In one class of spectroscopic ellipsometer, an optical system focuses light from a light source through a monochromator, a polarization-state generator, a sample and an analyzer to determine the polarization state of the light caused by the reflection from the sample. The resulting light pattern is detected by a photodetector to provide an analog electrical signal that indicates the polarization state of the light. In some ellipsometers, the analog electrical signal is converted to a digital signal. The position of the sample and detector is usually manually adjustable to obtain the proper angle of impinging light.

In a prior art type of spectroscopic ellipsometer of this class, the optical system includes one or more lens systems, mirror systems or a combination of the two types of systems to focus the light from the light source through a monochromator slit onto the diffraction grating. The grating and mirrors are prealigned and calibrated in the monochromator. The light reflected from the sample, after being affected by an analyzer, is detected by a photomultiplier tube, and then converted to an electrical signal. The electrical signal is directly digitized by an analog-to-digital converter.

The prior art systems of this type have the disadvantages of being unduly complex, expensive and time-consuming to adjust. Part of the complexity occurs because photomultiplier tubes are used to obtain increased sensitivity instead of using diode detectors. However, simple, inexpensive diode detectors usually have too poor a signal-to-noise ratio with the intensity of light provided by the prior art spectroscopic ellipsometers.

SUMMARY OF THE INVENTION

Accordingly, it is an object of the invention to provide an improved spectroscopic ellipsometer and improved spectroscopic ellipsometry techniques.

It is a further object of the invention to provide a less complicated optical system for transmitting light to the diffraction grating.

It is a further object of the invention to provide a system that provides improved light throughput and that improves the signal-to-noise ratio.

It is a still further object of the invention to provide a technique permitting the use of diodes in a spectroscopic ellipsometer with adequate sensitivity.

In accordance with the above and further objects of the invention, light from a light source is collimated and transmitted through a polarization-state generator, a sample and an analyzer. In one embodiment, the light leaving the analyzer is white collimated light, and this light is applied to a diffraction grating without further focusing.

In this embodiment, light reflected from the diffraction grating is sensed by a photodiode array. The diffraction grating is aligned so that the incident collimated light is at a known angle with respect to the grating. This is achieved by a photodetector arrangement that receives the white light specularly reflected from the diffraction grating, such that it senses any deviation from the desired angular relationship between the incident collimated light and the grating. The diffraction grating reflects a predetermined spectrum of light to the photodiode array.

In another embodiment, a pivotal diffraction grating is aligned with the collimated incident light and then repositioned to refocus the diffracted light by turning the diffraction grating at an angle. In one variation of this embodiment, the white light spectrum from the diffraction grating is focused on an additional diffraction grating. A first photodetector arrangement may derive a spectrum from the first diffraction grating and a second sensor from the second grating, thus permitting either a second spectrum or more points in a portion of the spectrum sensed by the first array.

In still another embodiment, a monochromator applies a single wavelength of light to the polarization-state generator, sample and analyzer and that light is sensed by a stacked diode sensor. Thus, the stacked detector can be used to sense two different spectral ranges of light without physically switching detectors.

From the above description, it can be understood that the spectroscopic ellipsometer of this invention has several advantages, such as: (1) it is simple, inexpensive and relatively easy to operate compared to other spectroscopic ellipsometers with the same capability; (2) it is relatively sensitive for a spectroscopic ellipsometer using inexpensive detectors; and (3) it is relatively easy to adjust the diffraction grating for precise reflection onto the photodiode array.

DESCRIPTION OF THE DRAWINGS

FIG. **1** is a block diagram of an embodiment of spectroscopic ellipsometer;

FIG. **2** is a block diagram of a portion of the spectroscopic ellipsometer of FIG. **1**;

FIG. **3** is a schematic drawing of an analyzing and detecting portion of the spectroscopic ellipsometer of FIG. **1**;

FIG. **4** is a schematic diagram of another embodiment of a portion of the analyzing and detecting portion of the spectroscopic ellipsometer of FIG. **1**;

FIG. **5** is a schematic drawing of still another embodiment of an analyzing and detecting portion of the spectroscopic ellipsometer of FIG. **1**;

FIG. **6** is a schematic drawing of still another embodiment of the analyzing and detecting portion of the spectroscopic ellipsometer of FIG. **1**;

FIG. **7** is a plan view of a quadrant sensor usable in an embodiment of the invention;

FIG. **8** is a side view of the quadrant sensor of FIG. **7**;

FIG. **9** is a schematic view of the quadrant sensor of FIG. **7**;

FIG. **10** is a plan view of an embodiment of detector usable in the embodiments of FIGS. **1–6**;

FIG. **11** is a plan view and side elevational sectional view respectively of the detector of FIG. **10**;

FIG. **12** is a block diagram of another embodiment of polarization-state generator, sample and analyzer usable in a spectroscopic ellipsometer; and

FIG. **13** is a block diagram of another detector system usable in a spectroscopic ellipsometer.

DETAILED DESCRIPTION

In FIG. **1**, there is shown a block diagram of a spectroscopic ellipsometer **10** in accordance with an embodiment of the invention having a light source **12**, a polarization-state generator, sample and analyzer **14**, a detection system **16** and a control system **18** arranged

with respect to each other so that: (1) the light source **12** transmits white light to the polarization-state generator, sample and analyzer **14**; (2) the polarization-state generator, sample and analyzer **14** sets a polarization state of the light transmitted to the sample, which changes the polarization state in the light reflected from the sample and converts the light reflected from the sample into a time varying pattern of light intensity; and (3) the detection system **16** detects the light to provide an electrical signal indicating the change in the polarization due to reflection from the sample for transmission to the control system **18** as described in the literature. In this specification, the word "sample" is intended to cover any type of sample or container for a sample or support for a sample.

This light from the polarization-state generator, sample and analyzer **14** is processed in the detection system **16** to supply a spectrum of different wavelengths of light and that spectrum of different wavelengths of light is converted to electrical signals that are applied to the control system **18** for determination of the characteristics of the sample and indication of them to a user. The control system **18** is also capable of certain control functions in some embodiments of the invention and may be electrically connected to the detection system **16** or to the polarization-state generator, sample and analyzer **14** or light source **12** for that purpose. It may include any standard microprocessor, and the control system **18** is not part of the invention except insofar as it performs standard operations in an ellipsometer.

The detection system **16** includes a diffraction grating **20**, a photodiode detector array **22** and a sensor **24**. Commonly, the ellipsometer must be repositioned to sense the characteristics of the sample. Under some circumstances, it is necessary to align the diffraction grating **20** with the incident beam of light after the repositioning, and failure to do so reproduceably may result in an erroneous measurement. The sensor **24** and diffraction grating **20** are arranged with respect to each other to conveniently and precisely permit alignment of the diffraction grating **20** with respect to the light entering it and with respect to the photodiode detector array **22**.

In constructing the detection system **16**, the photodiode detector array **22** is aligned with the diffraction grating **20** so that, when the light is at a predetermined angle to the diffraction grating **20**, the photodiode detector array **22** receives a spectrum of light useful in ellipsometry.

The ellipsometer **10** is spectrally calibrated at the factory. For such spectral calibration, light is supplied from a commercially obtained monochromator system, and the photodiode array is positioned so that, with the light from the monochromator incident at a predetermined angle on the diffraction grating, the photodetectors are receiving a spectrum of light in accordance with the design specifications. This calibration is necessary because the diffraction grating must position the spectrum of light on different photodiode elements in the photodiode array with sufficient precision to permit accurate resolution of the different wavelengths of light. The incident beam should be within 0.5 degrees from the predetermined angle (with respect to the diffraction grating) to achieve a reproduceable spectral shift and in the preferred embodiment is 0.02 degrees.

To obtain adequate alignment, the diffraction grating **20** is turned toward the source of light from the polarization-state generator, sample and analyzer **14**. The sensor **24** senses the specularly reflected white light from the diffraction grating **20** and detects light reflected at an incorrect angle to indicate failure to align the diffraction grating **20**. For example, four photodetectors precisely positioned and adjacent to each other can be used to indicate the relative light flux on each side of the sensor and thus indicate alignment.

In the preferred embodiment, the sensor **24** is a quadrant sensor, model SD225-23-21-040 manufactured and sold by Silican Detector Corporation, 1240 Avenida Acasco, Camarillo, Calif. 93010, U.S.A. It includes a central opening through which a beam of light may pass, with light-sensitive quadrants on four sides of the opening and provides four electrical signals, one from each quadrant of its light-sensitive surface. When those signals are all equal, the diffraction grating **20** is directly aligned at a predetermined angle with respect to the incident collimated light.

In FIG. **2**, there is shown a block diagram of the polarization-state generator, sample and analyzer **14** having a collimator **30**, a polarization-state generator **32**, a sample **34** and an analyzer **36**. The collimator **30** receives light directly from the light source without an intermediate monochromator and collimates it. This reduces the complexity of the apparatus and enables a higher intensity of light from the same light source to be applied by the collimator **30** to the polarization-state generator **32** located between the collimator **30** and the sample **34**. In the preferred embodiment, the polarization-state generator **32** includes a fixed polarizer and a contiuously rotating polarizer. The analyzer **36** consists of a fixed polarizer.

The polarization-state generator **32** is positioned to transmit light to the sample **34** where it is affected by the sample therein. Light reflected from the sample has its polarization state changed, and the changed light is reflected to the analyzer **36**, which in the embodiment of FIG. **2** is a fixed polarizer. The light transmitted from the analyzer **36** to the detection system **16** (FIG. **1**) is totally polarized, but indicates the polarization state created by reflection from the sample with periodic intensity changes in the light as a function of time. The period of the intensity changes is related to the frequency of modulation applied in the polarization state generator.

Although one configuration of polarization-state generator, sample and analyzer **14** has been described in some detail, many other combinations and arrangements of the individual elements are possible with equally beneficial results. Such devices are described in the literature and can incorporate different arrangements of rotating and stationary polarizers suitable for use in this invention.

In FIG. **3**, there is shown a schematic drawing of the ellipsometer **10** showing the light source **12**, the polarization-state generator, sample and analyzer **14**, the detector system **16** and the control system **18** arranged in a manner indicating how they may be packaged together to be readily moved to a specific site. For example, in FIG. **3**, a sample **34** is not able to be readily moved to the ellipsometer and is measured at its site.

In this circumstance, a first housing **31** includes the light source **12**, a collimator **30** and the polarization-state generator **32**, aligned to transmit light to the sample **34**, and a second housing **21** includes the analyzer **36**, a sensor **24**, the diffraction grating **20** and a photodiode sensing array **22**. These two housings are positioned sufficiently near the location **35** of the sample **34** located

so that light from the first housing **31** may be transmited to the sample **34** and light reflected from the sample **34** may be collected by the detector system **16** which generates electrical signals and supplies them to the control system **18**.

The polarization-state generator **32**, in this embodiment, includes a fixed polarizer **32A** and a continuously rotating polarizer **32B** so that the light emitted by the light source **12** is collimated by a lens **30** and passed through the polarization-state generator **32** before reaching the sample **34**. In the preferred embodiment, the light source **12** is a source of white light and may be a xenon arc lamp.

The second housing **21** is adapted to have its operative elements aligned with the reflected light from the sample **34** so that the light passes through the analyzer **36** and an aperture in the sensor **24** to the diffraction grating **20**. These operative elements are prealigned at the factory using a commercially obtained monochromator until the incident light is at a predetermined angle to the diffraction grating **20**, and at that time, the desired spectrum of light is applied to the photodetectors in the photodiode array **22**.

To align the second housing **21**, the sensor **24** is a quadrant sensor with a one millimeter center aperture. The light beam passing through that aperture is specularly reflected from the diffraction grating **20**, and when close to normal, the light reflects onto the quadrants of the quadrant sensor **24**.

If more light is reflected on one quadrant than another, a signal is provided indicating that the second housing **21** should be adjusted. When the light is equal from all quadrants, the housing **21** and its operative elements, the analyzer **36**, diffraction grating **20** and photodiode array **22** are all in the proper alignment. The balance can be determined by comparison: (1) by hand such as with a null bridge or meter or other instrument; or (2) automatically such as by comparators within the control system **18** as in the preferred embodiment.

In FIG. **4**, there is shown another embodiment of the second housing **21** that is the same as the embodiment of FIG. **3** except that the diffraction grating **20** is at a slight angle, such as for example, 10 degrees to the incident light beam **25**, the quadrant sensor **24** is positioned a short distance from the incident light beam **25** so that it receives first order specularly reflected light and a separate aperture plate **27** is positioned so that the light beam **25** is blocked except for that passing through an aperture in the aperture plate **27**. The quadrant sensor **24** is used in the same manner as described in connection with FIG. **3** to align the housing **21** so the diffraction grating is at the predetermined angle at which the first order specular light is directed to the sensor **24** and the diffracted light is reflected to the photodiode sensing array **22** as these units are positioned in the housing in accordance with the design of the ellipsometer.

In FIG. **5**, there is shown still another embodiment of the second housing **21** having a diffraction grating **20A** pivotable about a pivot point **23** to align it with the diode array **22A**. This arrangement can receive incident light passing through the analyzer **36** and quadrant sensor **24** at different angles (with respect to the diffraction grating) to provide different wavelength ranges to the diode array **22A**. The diode array **22A** can be aligned by rotating the diffraction grating **20A** and recording the location where the specularly reflected white light is observed in the photodiode array **22A**. As an alternative, the diffraction grating **20A** may remain fixed and the diode array **22A** may be slidable, or both mechanisms may be provided.

In FIG. **6**, there is shown still another embodiment within the second housing **21** including the analyzer **36** and quadrant sensor **24** arranged in the same manner as in the embodiments of FIGS. **3** and **5**. In the embodiment of FIG. **6**, a grating **20B** reflects a spectrum onto the diode array **22A** and its specularly reflected white light on another grating **20C** that focuses another spectrum on still another photodiode array **22B**. In this manner, more areas of the spectrum can be analyzed from the positioning of the two different photodiode arrays **22A** and **22B**.

With this arrangement, the two diffraction gratings can each provide a spectrum from a different range, such as for example, one providing a range from 0.25 to 0.5 micron wavelength and the second covering a range of between 0.5 to 1.0 microns in wavelength. This is useful because each grating has a limited useful spectral range and becomes inefficient outside of that range. Thus, using both spectrums avoids the need to substitute one grating for another when a different range is being explored.

In FIG. **7**, FIG. **8** and FIG. **9**, there are shown a plan view, a side view and a schematic view respectively of the quadrant sensor **24** having a central aperture **60**, and four light-sensitive areas **62**, **64**, **66** and **68**. The central aperture **60** is positioned to be aligned with the central axis of a beam of light. Each of the four light-sensitive areas forms a different one of the four quadrants of a circle with the aperture **60** as its center so that a beam of light with its center axis aligned with the aperture **60** overlaps equally in each of the four light-sensitive areas **62**, **64**, **66** and **68**.

Each of the four light-sensitive areas **62**, **64**, **66** and **68** is represented by a different one of the diodes indicated by the same reference numbers in FIG. **7** and is connected to a different one of the conductors **70**, **72**, **74** and **76** respectively so that when the light is not reflected evenly back toward the sensor **24** from the diffraction grating **20**, different amplitude signals are being applied to each of the conductors **70**, **72**, **74** and **76**. The angle of the diffraction grating **20** is adjusted until the amplitude of the signals from the four light-sensitive quadrants **62**, **64**, **66** and **68** are the same. When the amplitudes of the signals from the four light-sensitive quadrants are the same, the incident light reflected from the grating is at the proper angle of incidence. In the preferred embodiment, the signals from the conductors **70–76** are applied to the analog-to digital converter **106** (FIG. **13**) for comparison in the microprocessor **112**.

In FIG. **10** and FIG. **11**, there are shown a plan view and side elevational sectional view respectively of the photodiode array **22**. In the preferred embodiment, this photodiode array is the type PDA38 sold by E. G. and G. Judson, 221 Commerce Drive, Montgomeryville, Pa. 18936, U.S.A. It includes an element having a plurality of photodiodes **90** each of which has its individual conductors shown generally at 92. The entire chip is approximately 15.2 millimeters wide, 51 millimeters long and 3 millimeters deep with 4.5 -millimeter long connecting leads spaced 2.54 millimeters center-to-center and being 0.48 millimeters wide. The active area of the photodiodes is approximately 3.8 square millimeters. This relatively small array requires careful alignment of the spectrum from the diffraction grating but is economical in use. Consequently, the diffraction grating should be able to direct light onto the photodiode array

within plus or minus one degree and this requires precise alignment with respect to the incident light.

In FIG. **12**, there is shown a block diagram of another embodiment of ellipsometer **10A** having a light source **12A**, a polarization-state generator **32**, a sample and analyzer **14A**, a detector **16A** and a control system **18A**. In this embodiment, the light source **12A** selects a frequency of the light from a xenon lamp, chops it, filters it, collimates it and transmits it to the polarization-state generator **32** and the sample and analyzer **14A**. The light source uses a xenon lamp to take data in a range between 0.25 to 1.7 microns wavelength.

To provide a collimated beam of chopped light, the light source **12A** includes a xenon lamp **81**, a monochromator **82**, a chopper **84**, an order sorting filter and a collimater **86**. The Xenon lamp **81** generates white light, one wavelength of which is selected by the monochromator **82** in a manner known in the art under the control of the control system **18A**. This wavelength of light is chopped in the chopper **84** at a conventional chopping rate, filtered by the appropriate filter and transmitted through the collimator **86**, which collimates it prior to transmitting it onto the polarization state generator, sample and analyzer **14A**. With this embodiment, a conventional collimated chopped light is transmitted for later application, after polarization, to the sample.

The polarization-state generator **32** polarizes light and transmits it to the sample **34**. Light is reflected from the sample **34** to the analyzer **36** that provides intensity fluctuations to the detector **16A** representing the changes in polarization state caused by the sample **34**. The light signal is transmitted to the detector **16A** for conversion to electrical signals and the electrical signals are applied to the control system **18A** for analysis in a conventional way.

The time varying light pattern from the analyzer **36** indicating the change in the polarization state of light caused by the sample **34** are applied to the detector **16A** which converts the chopped light pulses to electrical signals for application to the control system **18A**. In the preferred embodiment, the detector **16A** is a two-color silicon photodiode indicated as a UV-Si/InGaAs-jA photodiode (silicon-indium gallium arsenide photodiode) having a silicon area of 0.58 centimeters (0.20 square centimeters) and an InGaAs area of 0.30 centimeters and sold by Electro-Optical Systems, Inc., Greenway Technology Park, 1000 Nutt Road, Phoenixville, Pa. 19460, U.S.A. The computer selectively connects one of the two silicon photodiodes in circuit with the control system **18A**. In this circuit, one wavelength range of light is detected by the silicon level and the other passes through it (silicon is transparent in the near infrared) to the indium gallium arsenide level for detection. The computer selects which of the readouts is desired.

In FIG. **13**, there is shown a block diagram of the detector **16A** and control system **18A** connected together to receive a light pattern, generate an electrical signal from the light pattern and provide information concerning the sample from it. For this purpose, the detector **16A** is a two-color detector and the control system **18A** includes a multiplex circuit **102**, an A/D converter **106**, a computer interface **108**, a microprocessor **112** and a timing system **110**.

With this arrangement, the wavelength of light from the two-color detector **100** is selected, the signal representing it is supplied as an analog electrical signal to the A/D converter **106** in the control system **18A**. This signal is digitized in the A/D converter **106** and supplied to the computer interface **108** and then to the microprocessor **112** through the computer interface **108**. These circuits operate under the control of the timing system **110**. The timing system causes the A/D converter **106** to sample data and apply it to the microprocessor **112** through the computer interface **108** at a rate controlled by the timing system **110** to be faster than the chopping rate of the chopper **84**.

In the preferred embodiment, a smooth overlap of the spectral range is obtained because the two diodes in the two-color detector overlap in response over a range of wavelengths. Using the xenon lamp with the two-color detector **100** allows spectral coverage from 0.25 microns to 1.7 microns without switching light sources or detector systems. If a quartz tungsten halogen lamp is used, data could not be obtained below approximately 0.4 microns and it would be necessary to change light sources to a xenon lamp to take data at these short wavelengths.

As can be understood from the above description, the spectroscopic ellipsometer of this invention has the advantage of being economical in construction, easy to operate and simple to calibrate. In one embodiment, it requires only the use of a simple diffraction grating, rather than a complex monochromator system, to obtain spectroscopic ellipsometric data.

While a preferred embodiment of the invention has been described in some detail, many variations and modifications of the preferred embodiment are possible in the light of the above teachings. Therefore, it is to be understood that, within the scope of the appended claims, the invention may be practiced other than as specifically described.

What is claimed is:

1. A spectroscopic ellipsometer adapted to sense characteristics of a sample comprising:

a light source;

a polarization-state generator;

an analyzer; and

a diffraction grating and a collimator positioned so that the diffraction grating receives collimated white light passing through the analyzer without further focusing after the light leaves the sample and transmits the white light to a detector; wherein the diffraction grating reflects incident light onto the detector at a predetermined angle with respect to a normal to the diffraction grating with a precision of at least plus or minus one-half degree.

2. A spectroscopic ellipsometer in accordance with claim **1** in which said diffraction grating is pivotable.

3. A spectroscopic ellipsometer in accordance with claim **1** further including:

an alignment-sensing means for sensing an alignment of an incident beam of light from the analyzer to the surface of the diffraction grating;

said alignment-sensing means including an aperture through which the incident beam of light is transmitted and an alignment light sensor having at least first and second light-sensitive areas on opposite sides of said alignment light sensor;

means for comparing the signal from said light-sensitive areas;

said alignment-sensing means being positioned between the analyzer and the diffraction grating whereby it receives light specularly reflected from the diffraction grating;

said alignment-sensing means being adapted to sense light specularly reflected from the diffraction grating, whereby an equality of the light from the light-sensitive areas indicates that the incident beam of light is aligned at a predetermined angle to the diffraction grating.

4. A spectroscopic ellipsometer in accordance with claim **3** further including a second diffraction grating and a second detector whereby specularly reflected white light from the first mentioned diffraction grating is reflected to the second diffraction grating.

5. A spectroscopic ellipsometer in accordance with claim **1** in which said sensor is a silicon diode array.

6. A spectroscopic ellipsometer in accordance with claim **1** in which the collimator is positioned to receive light from a light source and transmit it to the polarization-state generator without either divergence or convergence of the light by more than ten degrees between the collimator and the diffraction grating.

7. A spectroscopic ellipsometer in accordance with claim **1** in which the light is transmitted from the light source to the polarization-state generator without passing through a monochromator.

8. A spectroscopic ellipsometer comprising:

a light source including a monochromator;

a polarization-state generator;

an analyzer; and

a detector positioned so that light from a monochromator is transmitted through the polarization-state generator, reflected from a sample and transmitted through the analyzer to the detector;

said detector including a stacked photodiode in which the light transmitted through a first photodiode impinges on a second photodiode, said photodiodes having partly overlapping spectral ranges.

9. A spectroscopic ellipsometer in accordance with claim **8** in which a spectrum covers a wavelength range between 0.25 to 1.7 microns.

10. A spectroscopic ellipsometer in accordance with claim **8** in which the light source includes a xenon lamp.

11. A method of aligning a diffraction grating with incident light comprising the steps of:

transmitting the incident light through an aperture having light-sensitive areas on at least two of its sides to the diffraction grating; and

sensing the light specularly reflected from the diffraction grating on the at least two adjacent light sensitive areas a known distance from the aperture: and

adjusting the position of the diffraction grating until the light on said at least two light-sensitive areas is balanced.

12. A method of aligning a diffraction grating with incident light comprising the steps of:

transmitting the incident light through an aperture to the diffraction grating;

sensing light specularly reflected from the diffraction grating with a sensing means having at least two adjacent light sensitive areas a known distance from the aperture; and

adjusting the position of the diffraction grating until the light on said at least two light-sensitive areas is balanced.

13. A method of spectroscopic analysis comprising the steps of:

transmitting collimated light through a polarization-state generator;

reflecting the collimated light from a sample;

transmitting the reflected light to an analyzer; and

transmitting the light from the analyzer to a diffraction grating without further focusing after the light is reflected from the sample.

14. A method of spectroscopic analysis in accordance with claim **13** further comprising the steps of:

transmitting one spectrum of light from said diffraction grating to a first detector and reflecting a second spectrum of light to a second diffraction grating, wherein said second spectrum includes at least a white light band; and

transmitting the second spectrum of diffracted light from the second diffraction grating to a second detector.

15. A method of performing ellipsometry comprising the steps of:

transmitting monochromatic light through a polarization-state generator to a sample; and

receiving reflected light from the sample after it passes through an analyzer onto a two-stacked photodiodes, whereby two separate wavelength ranges of light may be received, said wavelength ranges overlapping.

* * * * *