University of Nebraska - Lincoln
DigitalCommons@University of Nebraska - Lincoln

Civil Engineering Faculty Publications | Civil Engineering

8-9-2005

# HIGH-IMPACT, ENERGY-ABSORBING VEHICLE BARRIER SYSTEM: U.S. Patent No. US 6,926,461 B1

Ronald K. Faller
*University of Nebraska - Lincoln*, rfaller1@unl.edu

Dean L. Sicking
*University of Nebraska - Lincoln*, dsicking1@unl.edu

John R. Rohde
jrohde1@unl.edu

A. Keller
*Lincoln, NE*

Robert W. Bielenberg
rbielenberg2@unl.edu

***See next page for additional authors***

Follow this and additional works at: http://digitalcommons.unl.edu/civilengfacpub

Part of the Civil Engineering Commons

Faller, Ronald K.; Sicking, Dean L.; Rohde, John R.; Keller, A.; Bielenberg, Robert W.; Holloway, James C.; Addink, Kenneth H.; and Polivka, Karla A., "HIGH-IMPACT, ENERGY-ABSORBING VEHICLE BARRIER SYSTEM: U.S. Patent No. US 6,926,461 B1" (2005). *Civil Engineering Faculty Publications.* Paper 29.
http://digitalcommons.unl.edu/civilengfacpub/29

This Article is brought to you for free and open access by the Civil Engineering at DigitalCommons@University of Nebraska - Lincoln. It has been accepted for inclusion in Civil Engineering Faculty Publications by an authorized administrator of DigitalCommons@University of Nebraska - Lincoln.

**Authors**
Ronald K. Faller, Dean L. Sicking, John R. Rohde, A. Keller, Robert W. Bielenberg, James C. Holloway, Kenneth H. Addink, and Karla A. Polivka

This article is available at DigitalCommons@University of Nebraska - Lincoln: http://digitalcommons.unl.edu/civilengfacpub/29

US006926461B1

(12) **United States Patent**
**Faller et al.**

(10) **Patent No.: US 6,926,461 B1**
(45) **Date of Patent: Aug. 9, 2005**

(54) **HIGH-IMPACT, ENERGY-ABSORBING VEHICLE BARRIER SYSTEM**

(75) Inventors: **Ronald K. Faller**, Lincoln, NE (US); **Dean L. Sicking**, Lincoln, NE (US); **John R. Rohde**, Lincoln, NE (US); **John D. Reid**, Lincoln, NE (US); **Eric A. Keller**, Lincoln, NE (US); **Robert W. Bielenberg**, Lincoln, NE (US); **James C. Holloway**, Lincoln, NE (US); **Kenneth H. Addink**, Lincoln, NE (US); **Karla A. Polivka**, Lincoln, NE (US)

(73) Assignee: **Board of Regents of University of Nebraska**, Lincoln, NE (US)

( * ) Notice: Subject to any disclaimer, the term of this patent is extended or adjusted under 35 U.S.C. 154(b) by 94 days.

(21) Appl. No.: **10/118,728**

(22) Filed: **Apr. 8, 2002**

(51) **Int. Cl.**[7] ..... **E01F 15/00**
(52) **U.S. Cl.** ..... **404/6**; 404/10
(58) **Field of Search** ..... 404/6, 10; 256/13.1

(56) **References Cited**

U.S. PATENT DOCUMENTS

| | | | | |
|---|---|---|---|---|
| 3,049,062 A | * | 8/1962 | Irwin | 404/6 |
| 3,666,055 A | | 5/1972 | Walker et al. | |
| 3,674,115 A | | 7/1972 | Young et al. | |
| 3,680,662 A | | 8/1972 | Walker et al. | |
| 3,944,187 A | | 3/1976 | Walker | |
| 4,101,115 A | | 7/1978 | Meinzer | |
| 4,321,989 A | | 3/1982 | Meinzer | |
| 4,452,431 A | | 6/1984 | Stephens et al. | |
| 4,674,911 A | | 6/1987 | Gertz | |
| 4,681,302 A | | 7/1987 | Thompson | |
| 4,773,629 A | | 9/1988 | Yodock | |
| 4,815,565 A | | 3/1989 | Sicking et al. | |
| 4,869,617 A | | 9/1989 | Chiodo | |
| 4,946,306 A | | 8/1990 | Yodock | |

(Continued)

FOREIGN PATENT DOCUMENTS

DE 20003791 U1 * 5/2000 ..... E01F 15/10

OTHER PUBLICATIONS

Reid, John D., et al., "High Speed Crash Barrier Investigation Using Simulation", AMD-vol. 246/BED-vol. 49, Crashworthiness, Occupant Protection, and Biomechanics in Transportation Systems—2000, ASME 2000.

(Continued)

*Primary Examiner*—Gary S. Hartmann
(74) *Attorney, Agent, or Firm*—Shook, Hardy & Bacon L.L.P.

(57) **ABSTRACT**

A high-impact, energy-absorbing vehicle barrier system generally includes a substantially rigid outer containment wall coupled via cable restraint assemblies with an energy-absorbing inner impact wall, and energy-absorbing cartridges strategically positioned between the impact wall and containment wall. The impact wall is constructed of a number of rectangular tubes coupled with one another to presents a substantially smooth, uniform surface to passing vehicles. The energy-absorbing cartridges generally consist of a number of foam sheets which compress and crush between the containment wall and impact wall to absorb energy from an errant vehicle striking the face of the impact wall, while the deflection and deformation of the impact wall tubes dissipates additional energy to reduce peak decelerations and mitigate the severity of high-energy vehicular impacts. The splice units and quick-disconnect cable restraint system provide for relatively easy and quick replacement of damaged impact wall sections and energy-absorbing cartridges.

**24 Claims, 3 Drawing Sheets**

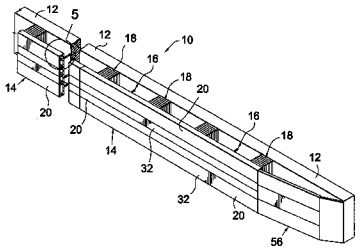


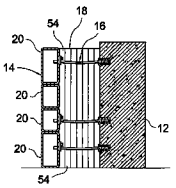

U.S. PATENT DOCUMENTS

| | | | | |
|---|---|---|---|---|
| 5,125,762 | A | 6/1992 | Strassil | |
| 5,238,228 | A | 8/1993 | Moon | |
| 5,314,261 | A | 5/1994 | Stephens | |
| 5,403,112 | A | 4/1995 | Carney, III | |
| 5,425,594 | A | 6/1995 | Krage et al. | |
| 5,605,413 | A | 2/1997 | Brown | |
| 5,645,368 | A | 7/1997 | Yunick | |
| 5,660,496 | A | 8/1997 | Muller et al. | |
| 5,797,592 | A | 8/1998 | Machado | |
| 5,823,584 | A | 10/1998 | Carney, III | |
| 5,851,005 | A | 12/1998 | Muller et al. | |
| 5,860,762 | A | 1/1999 | Nelson | |
| 5,882,140 | A | 3/1999 | Yodock, Jr. et al. | |
| 5,915,876 | A * | 6/1999 | Barbazza | 404/6 |
| 5,921,702 | A * | 7/1999 | Fitch | 404/6 |
| 5,947,452 | A | 9/1999 | Albritton | |
| 6,004,066 | A * | 12/1999 | Niemerski | 404/6 |
| 6,007,269 | A * | 12/1999 | Marinelli | 404/6 |
| 6,010,275 | A * | 1/2000 | Fitch | 404/6 |
| 6,024,341 | A | 2/2000 | Gertz | |
| 6,048,138 | A * | 4/2000 | Lamberson et al. | 405/262 |
| 6,082,926 | A * | 7/2000 | Zimmer | 404/6 |
| 6,149,134 | A * | 11/2000 | Bank et al. | 256/13.1 |
| 6,488,268 | B1 * | 12/2002 | Albritton | 256/13.1 |
| 6,530,560 | B2 * | 3/2003 | King | 256/1 |
| 6,536,986 | B1 * | 3/2003 | Anghileri et al. | 404/6 |
| 6,540,434 | B1 * | 4/2003 | Hotchkin | 404/6 |
| 6,551,010 | B1 * | 4/2003 | Kiedaisch et al. | 404/6 |
| 6,554,530 | B2 * | 4/2003 | Moore | 404/6 |
| 6,604,888 | B2 * | 8/2003 | Dolan | 404/6 |
| 2003/0081997 | A1 * | 5/2003 | Kramer | 404/6 |

OTHER PUBLICATIONS

Giavotto, V., et al. "Vehicle Dynamics and Crash Dynamic with Minicomputer", Program Development & Technical Appliance Ltd. SPAT, Alberata 401, Milano 2 SEGRATE, Italy and Institute for Road Saftey Research SWOV, Duindorn 32, Leidshendam, The Nederlands, *Computer Structures*, vol. 16, No. 1-4, pp. 381-393, 1983.

Fitch, John D., et al. "Impact Attenuation Devices for Racing", Impact Dynamics, L.L.C., and Safety Quest, Inc., Society of Automotive Engineers, Inc., pp. 199-208, 1998.

Reid, John D., et al. "High Speed Crash Barrier Investigation Using Simulation" AMD-vol. 246/BED-vol. 49, Crashworthiness, Occupant Protection, and Biomechanics in Transportation Systems, ASME 200.

* cited by examiner

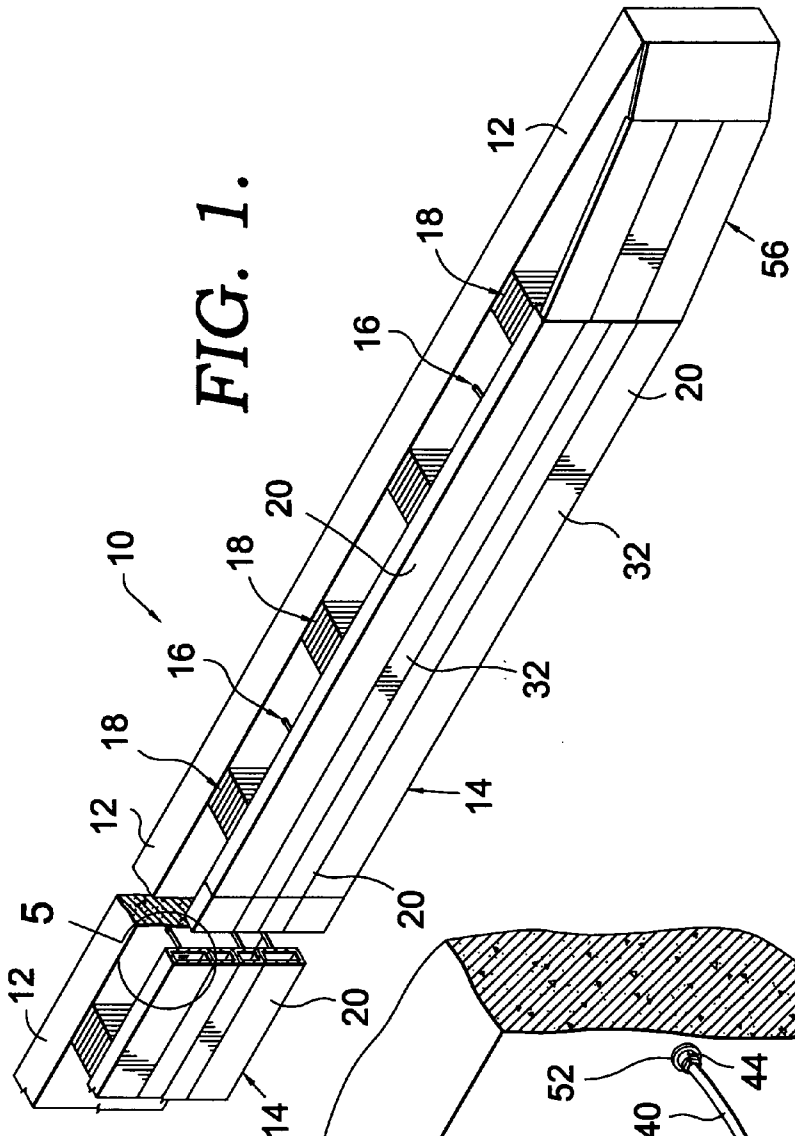


FIG. 1.

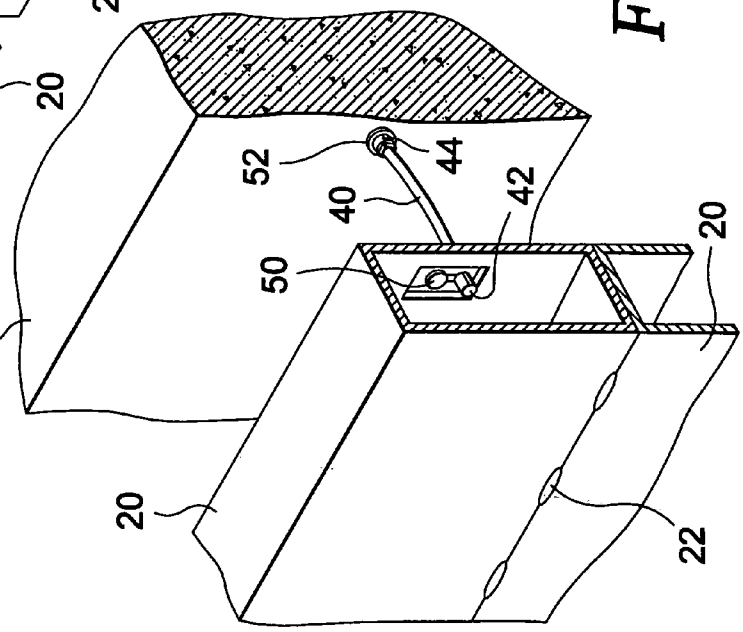


FIG. 5.

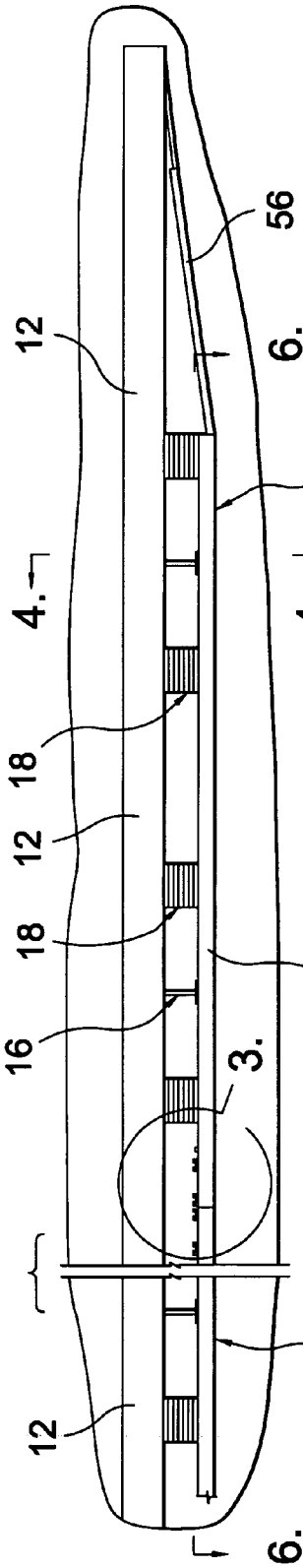


FIG. 2.

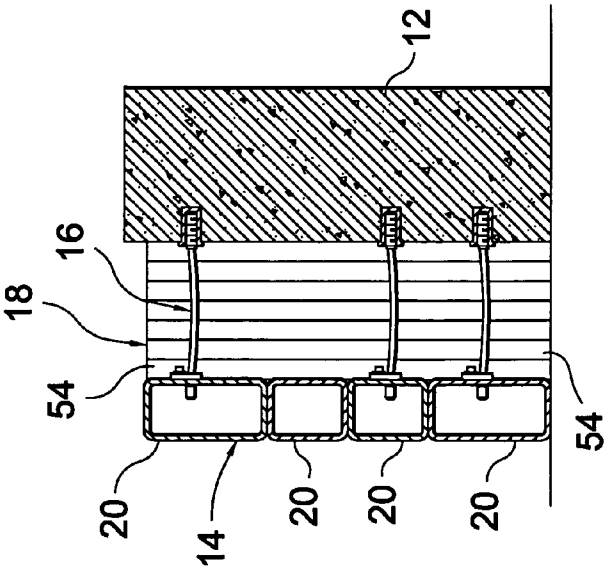


FIG. 4.

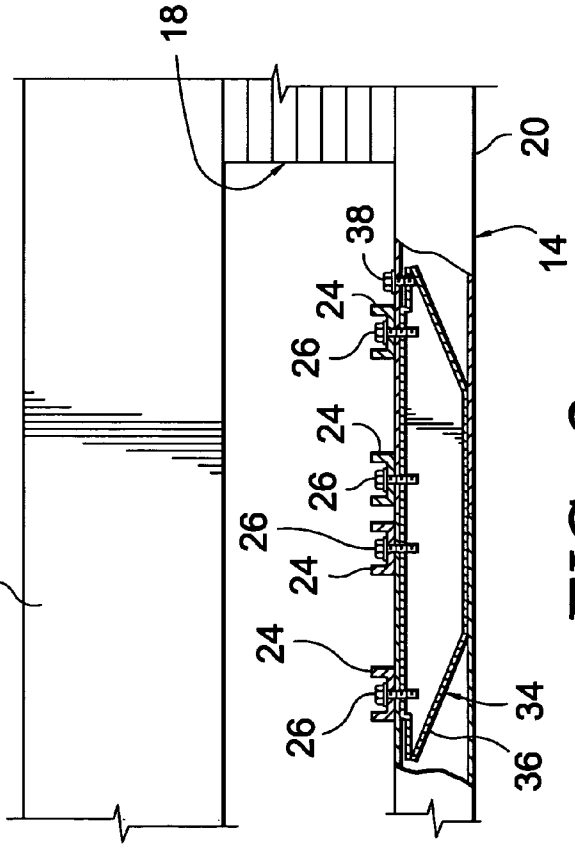


FIG. 3.

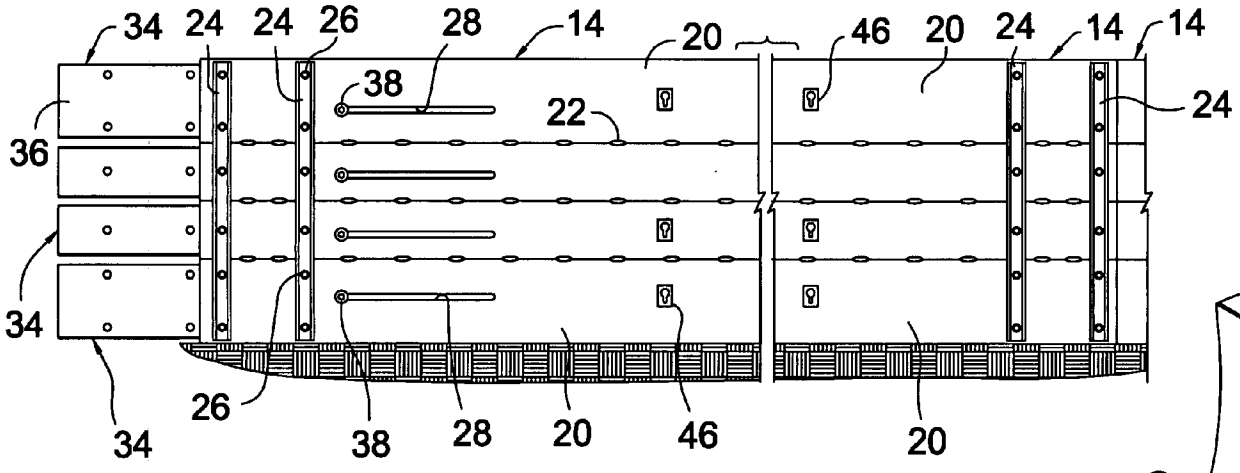
34
24
24
26
28
14
20
46
20
24
14
14
38
22
24
36
34
34
26
38
28
20
46
20

FIG. 6.

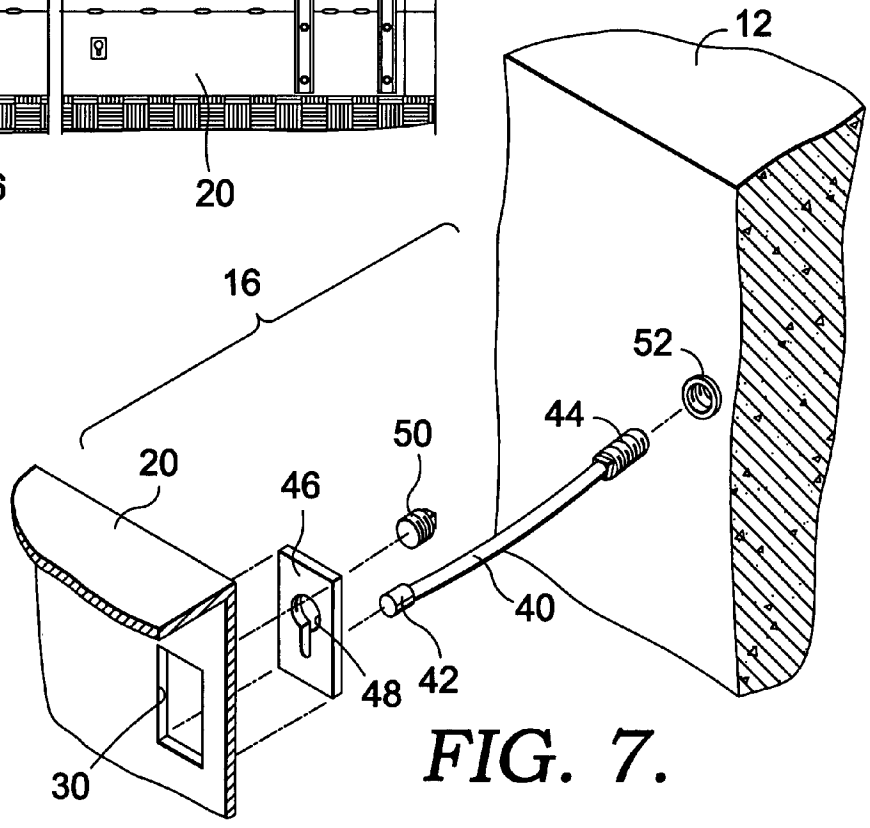
12
16
52
44
50
20
46
40
42
48
30

FIG. 7.

# HIGH-IMPACT, ENERGY-ABSORBING VEHICLE BARRIER SYSTEM

## STATEMENT REGARDING FEDERALLY SPONSORED RESEARCH OR DEVELOPMENT

Not applicable.

## CROSS-REFERENCE WITH RELATED APPLICATIONS

Not applicable.

## BACKGROUND OF THE INVENTION

In recent years, automobile racing has become one of the most popular sporting events in the United States and abroad. Auto racing's popularity is evidenced by the number of weekend auto races, extensive fan support and corporate sponsorship, and 24-hour cable television coverage. In addition, the sport's popularity is seen in the wide variety of race series available for drivers and spectators, including the Indy Racing League (IRL), NASCAR's WINSTON CUP, BUSCH, and Truck series, FORMULA 1, CART, and IROC.

In automobile racing, high-performance vehicles travel many times around an oval track at very high speeds. Many of these tracks utilize outer retaining or containment walls, typically in the form of substantially rigid concrete barriers, to prevent race vehicles from leaving the track. Unfortunately, race vehicles frequently lose control and impact the rigid outer containment wall, resulting in high-impact energies and, occasionally, driver injuries and fatalities. Errant vehicles and driver injuries and fatalities do not occur only on race tracks, but on highways, interstates, autobahns, and other public roadways in the United States and abroad. An improved barrier system can mitigate the severity of high-speed, high-energy automobile accidents and potentially reduce the number of injuries and fatalities on race tracks and public roadways.

Over the years, there have been many efforts to advance the state of the art of safety barrier design and construction. Some of the simpler proposed solutions consisted of loosely-stacked foam blocks placed around the outer, exterior walls of the track or roadway to reduce the severity of impact between the errant vehicle and the rigid wall. An impacting vehicle, however, can penetrate these foam blocks and strike the retaining wall with little or no impact energy having been absorbed by the blocks. Further, portions of the foam blocks can be knocked onto the track or roadway by the impacting vehicle, creating a hazard for other vehicles that follow. Other barrier designs have incorporated used rubber automobile tires banded together at selected regions of road courses. Although these tire barriers offer significant impact attenuation, these systems capture virtually all impacting vehicles, significantly increasing the total velocity change during the crash and greatly increasing the risk of driver injury or fatality. Further, tire barriers can allow vehicles to under-ride the barrier and lead to intrusion into the vehicle's occupant compartment. This type of system is generally appropriate only for locations where vehicle redirection is not practical, such as the gore areas created at tight hairpin turns.

In the late 1990's, a barrier system known as the FLAG barrier was developed. The FLAG barrier was a compression-type barrier consisting of large diameter, thick-walled resilient cylinders attached to a rigid concrete racetrack wall. The cylinders were placed adjacent one another, forming a



longitudinal row of cylinders positioned along the track side. Smaller diameter cylinders were placed on the traffic-side face of the longitudinal barrier and positioned and attached at the recessed regions between the larger cylinders to minimize the potential for vehicle pocketing. This barrier system was crash tested using a 1,248 kg. vehicle impacting at a speed of 121.0 km/hr and an angle of 20.8 degrees. After compressing several of the cylinders, the test vehicle was smoothly redirected, exiting the system at a speed of 70.0 km/hr and an angle of 15.0 degrees. However, the vehicle's velocity change and exit angle were both relatively high.

In 1998, a polyethylene energy dissipating system (PEDS) was developed for use on oval racetracks. The PEDS barrier system was configured using high-density polyethylene (HDPE) cylinders covered by a thick HDPE skin on the front and top of the cylinders. To expedite construction and repair of the PEDS system, the barrier was designed and fabricated in modular units attached to the concrete wall using a cable restraint system. The cover skin was used to reduce the potential for vehicle pocketing in the front face and reduce or eliminate the potential for the driver's extremities becoming caught in the openings between the cylinders. During the running of an IROC race at the Indianapolis Motor Speedway in August, 1998, driver Arie Luyendyk was involved in a crash which resulted in his IROC car impacting rearward on the PEDS barrier installed downstream from the inside corner of turn four. The estimated impact condition for this event consisted of a 1,633 kg car striking the barrier at a speed of 209 km/hr and an angle of 32 degrees. Remarkably, the driver sustained no serious injury from this severe impact event. These relatively positive results were attributed to the PEDS barrier and the excellent energy management of IROC vehicles during rearward impacts. The PEDS barrier, however, sustained significant damage, and debris was spread across the racing surface. Based on the impact performance of the PEDS barrier, several modifications were made to increase its energy-absorbing capabilities and prevent the units from becoming dislodged.

Beginning in 1999, researchers at the Midwest Roadside Safety Facility (MwRSF) in Lincoln, Nebr., in cooperation with IRL and NASCAR, investigated several energy-absorbing barrier concepts for use in high-speed racetrack and roadway applications using both computer simulation modeling and full-scale vehicle crash testing. The energy-absorbing and potential of both HDPE and foam materials were investigated. This testing and simulation indicated that HDPE barrier systems allowed impacting vehicles to gouge into the material and create snagging and pocketing, indicating to the MwRSF researchers that HDPE barrier faces offered no improvements or advantages over concrete barriers.

Simulation and testing of vehicle barriers indicates that lateral accelerations imparted to impacting vehicles and their occupants can be greatly reduced by adding even modest amounts of energy dissipation to rigid barrier systems. Further, testing has indicated that the utilization of relatively stiff longitudinal barrier elements would minimize vehicle rebound from the barrier. Subsequently, an energy-absorbing barrier system utilizing rubber energy absorbers with steel reinforced fiberglass fender panels was developed. This barrier design included a cable and strut mechanism by which the fender panels were attached to the vertical concrete backup structure to allow the barrier to deflect rearward with limited longitudinal motion. However, the relatively short "fish scale" fender panels and the soft energy absorbers utilized in this barrier caused the system to deform

around the front of the impacting vehicle, increasing the potential for snagging and/or high rebound angles at increased impact speeds. Further, the cables and struts used to mount the barrier to the backup structure also posed potential snagging problems during high-speed impacts.

## SUMMARY OF THE INVENTION

Accordingly, it is an object of the present invention to provide an energy-absorbing vehicle barrier system for use on high-speed race tracks and public roadways.

Another object of the present of the invention is to provide an energy-absorbing vehicle barrier system that reduces the potentially harmful deceleration forces experienced by an impacting vehicle and its occupants.

It is a further object of the present invention to provide an energy-absorbing vehicle barrier system that reduces or eliminates the potential for vehicle pocketing, gouging, or snagging in either direction of travel.

Yet another object of the present invention is to provide an energy-absorbing vehicle barrier system comprised of readily-available materials and that may be relatively easily and quickly repaired following a damaging vehicle impact.

The present invention provides for a high-impact, energy-absorbing vehicle barrier system. The barrier system generally includes a substantially rigid outer containment wall coupled via cable restraint assemblies with an energy-absorbing inner impact wall, and energy-absorbing cartridges strategically positioned between the impact wall and containment wall. A preferred embodiment of the barrier system of the present invention includes an impact wall comprised of a plurality of rectangular cross-sectioned structural steel tubes welded to one another to present a substantially smooth, uniform wall to passing vehicles. The impact wall generally consists of a number of impact wall sections coupled with one another by sliding splice units having beveled end faces. The face of the impact wall may be coated with a lubricant, such as zinc-rich paint, to further minimize friction between the impact wall and an errant, impacting vehicle. The energy-absorbing cartridges, which in a preferred embodiment consist of a plurality of foam sheets, compress and crush between the containment wall and impact wall and absorb energy from a vehicle striking the face of the impact wall. The deflection and deformation of the impact wall tubes toward the containment wall further dissipates energy of the impacting vehicle. The barrier system of the present invention is suitable for use on high-speed race tracks and public roadways, significantly reduces peak vehicular decelerations experienced by an impacting vehicle and its occupants, minimizes the potential for vehicle gouging, snagging, or pocketing in either direction of travel, and mitigates the severity of high-energy vehicular impacts. The cable restraint assemblies and sliding splice units provide for relatively easy and quick removal and replacement of damaged impact wall sections.

The new, high-impact, energy-absorbing barrier system of the present invention was developed to mitigate the severity of high-energy vehicular impacts. In impacts with rigid walls, vehicular decelerations are often maximized as the rigid wall does not displace and substantially all of the impact energy must be dissipated by the vehicle structure (e.g. the vehicle body, engine, transmission, tires, etc.). The new barrier system of the present invention reduces the severity of an impact when a vehicle strikes a containment wall at a high speed. The system reduces or eliminates snagging or pocketing in both directions of vehicle travel and also provides energy dissipation in both the impacting vehicle and the energy-absorbing barrier, significantly reducing peak vehicular and vehicle occupant decelerations when compared to the decelerations observed during an impact with a rigid containment wall. The mitigation of these high vehicular decelerations greatly reduces the potential for serious injury or fatality as a result of the impact with the exterior containment wall.

The barrier system of the present invention is designed primarily for use as protection for errant vehicles at high-risk locations such as on the outside of curves on race tracks and heavily congested high-speed roadways. Since this new barrier is primarily, but not exclusively, a longitudinal barrier, the technology has potential application as a roadside barrier in high accident locations such as curves in tunnels and congested roadways. The technology also has application in retrofitting rigid bridge railings and other permanent or temporary traffic barriers. For longitudinal barrier applications, the system would primarily be intended to mitigate the severity of oblique-angle vehicular impacts. However, this technology may also be applied to severe, high-impact events where perpendicular impacts to the system are anticipated. These higher-severity events include situations where crash cushions, end terminals, and truck-mounted or trailer-mounted attenuators are required.

## BRIEF DESCRIPTION OF THE DRAWINGS

In the accompanying drawings, which form a part of the specification and are to be read in conjunction therewith, and in which like reference numerals are used to indicate like parts in the various views:

FIG. **1** is a perspective view of an energy-absorbing vehicle barrier system, with parts broken away to show particular details of construction;

FIG. **2** is a top plan view of the system of FIG. **1**;

FIG. **3** is an enlarged view of the encircled region labeled **3** in FIG. **2**, with parts broken away to show particular details of construction;

FIG. **4** is a cross-sectional view taken along line **4**—**4** of FIG. **2**;

FIG. **5** is an enlarged view of the encircled region labeled **5** in FIG. **1**;

FIG. **6** is a cross-sectional view taken along line **6**—**6** in FIG. **2**; and

FIG. **7** is a view similar to FIG. **5** with parts being exploded.

## DETAILED DESCRIPTION OF PREFERRED EMBODIMENT

Referring to the drawings in greater detail, and initially to FIG. **1**, a high-impact, energy-absorbing vehicle barrier system of the present invention is designated by the numeral **10**. The barrier system **10** generally includes a substantially rigid containment wall **12**, an energy-absorbing impact wall **14**, a number of cable restraint assemblies **16** coupling the containment wall **12** with the impact wall **14**, and a number of energy-absorbing cartridges **18** positioned between the containment wall **12** and the impact wall **14**. It will be understood that the walls **12** and **14** of the barrier system **10** may be relatively straight (as depicted in FIG. **1**) for use adjacent race track straightaways, for example, and/or the walls **12** and **14** may be curved for barrier system **10** installations adjacent to race track or roadway turns having a radius.

The containment wall **12** is generally constructed of heavily reinforced concrete, but may be constructed of steel,

stone, or other substantially rigid material. The impact wall **14** of the present invention is configured such that it can be easily attached to an existing containment wall **12** such as those typically used at race tracks and high-speed tunnels, or an entire barrier system **10**, including impact wall **14** and containment wall **12**, may be constructed for newly-constructed race tracks and roadways.

As best seen in the embodiment depicted in FIGS. **1** and **4**, the impact wall **14** is preferably constructed from a series of structural steel tubes **20**. Tubes **20** are hollow, preferably have a rectangular or square cross-section, and preferably are constructed of ASTM A500 Grade C steel having a tube wall thickness of 3/16 inches. As best seen in FIGS. **6** and **7**, elongated slots **28** and keyhole plate apertures **30** are formed in the inner walls of tubes **20**. It will be understood by one skilled in the art that tubes **20** may be constructed of a variety of materials having varying dimensions and wall thicknesses suitable for dissipating energy of an impacting vehicle and resistant to snagging, pocketing, or gouging. The materials and wall thickness are selected based upon the desired energy absorption. As seen in FIGS. **5** and **6**, tubes **20** are preferably coupled with one another by a series of stitch or skip welds **22** spaced along the inner and outer faces of the tubes **20** to form impact wall **14** and presenting a substantially uniform, smooth face along the edge of the track or roadway. Tubes **20** may also be continuously welded to one another, but stitch or skip welds **20** are preferred, as the energy of an impacting vehicle may, under some impact conditions, be additionally dissipated in a controlled manner as the tube **20**-weld **22** interface fractures and gives way under the force of the impacting vehicle. As best seen in FIG. **6**, tubes **20** are further coupled with one another at their inner faces by brace members **24** extending across the inner faces of tubes **20** and perpendicular to the long axes of tubes **20**. Brace members **24** are preferably constructed of steel channel fixed to tubes **20** by welding and/or by use of brace bolts **26** that extend through brace members **24** and into or through bolt holes or apertures formed in the inner walls of tubes **20**.

When welded or otherwise coupled with one another, tubes **20** form the impact wall **14** and, as seen in FIG. **1**, present a relatively smooth, continuous face to impacting vehicles that spreads the vehicle impact forces and the deflection of wall **14** over a relatively large area. The face of wall **14** is preferably substantially vertical, as best seen in FIG. **4**. This impact wall **14** configuration also minimizes the potential for vehicle capture, gouging, pocketing, or snagging and serves to redirect an impacting vehicle at a relatively low exit angle relative to the wall **14**. The outer, traffic-side face of wall **14** is preferably galvanized or coated with a zinc-rich paint, low-friction lubricant, or other material **32** to further reduce friction between the impact wall **14** and an impacting vehicle, reduce the change in velocity of the impacting vehicle and driver, and reduce the exit angle of the impacting vehicle. The lower surface of impact wall **14** may rest directly on the surface of the race track or roadway, as depicted in FIG. **6**, or may be elevated slightly from the track or roadway surface by use of shims or supports positioned between the lower barrier surface and the surface of the track or roadway to permit water drainage and facilitate removal of debris from between wall **12** and wall **14**.

The use of structural steel tubes **20** to form the impact wall **14** allows the wall **14** to be manufactured from readily-available structural materials and permits a wide range of barrier height, as measured from the track or roadway surface to the top of the device. In a preferred embodiment for use at the Indianapolis Motor Speedway in Indianapolis, Ind., impact wall **14** is formed of four (4) structural steel tubes **20** each having a rectangular cross section and a width of six (6) inches, the bottom tube **20** having a height of approximately twelve (12) inches, the two (2) inner tubes **20** each having a height of approximately eight (8) inches, and the upper tube **20** having a height of approximately ten (10) inches, for a total impact wall **14** height of approximately thirty eight (38) inches. It will be understood, however, that impact wall **14** may be constructed of a single unitary member or tube **20**, or may be constructed of any number of tubes **20** or other structural members having varying dimensions and wall thicknesses.

The barrier system **10** of the present invention may include a single section of impact wall **14** (not depicted), or may be formed of a plurality of impact wall **14** sections coupled with one another by splice units **34**. In a particular preferred multi-section embodiment, such as that depicted in FIGS. **1** and **2**, the preferred length of each impact wall **14** section is twenty (20) feet. In such a multi-section embodiment, internal "hidden" splice units **34** are slidably positioned within tubes **20** at the joints between impact wall sections **14** and serve to couple the impact wall sections **14** to one another at the adjoining ends of adjacent sections **14**. In a preferred embodiment, the splice units **34** have beveled, sloped end faces **36** (as depicted in FIG. **3**) and are constructed of ASTM A500 Grade C steel. The splice units **34** are coupled with the tubes **20** by one or more threaded brace bolts **26** which extend through an aperture or hole in the brace member **24**, through an aperture or hole in the wall of the tube **20**, and through an aperture or hole in the wall of splice unit **34**, as best seen in FIG. **3**. To couple together curved wall sections **14** used at turns or corners having a radius, the splice units **34** may be slightly curved or bent to conform to the face of wall sections **14** and the walls of the tubes **20**. The splice units **34** are typically slidably connected with the tubes **20** by one or more threaded sliding splice bolts **38** fitted with a washer and extending through the tube slot **28** in the inner face of tube **20** and through an aperture or hole formed in the wall of the splice unit **34**, as best seen in FIGS. **3** and **6**. When brace bolts **26** and splice bolts **38** are removed or loosened sufficiently, the splice units **34** may slide and telescope within tubes **20**, as will be further discussed below. It will be understood that sliding splice bolts **38** may be eliminated in some non-longitudinal barrier applications, as in installations having substantially curved walls sections **14** that would not lend themselves to splice units **34** sliding and telescoping within the tubes **20**.

The internal, "hidden" splice units **34** reduce the potential that the sections of impact wall **14** will separate or that the joints between the sections of impact wall **14** will open up when a vehicle impacts the wall **14**. The outer edges of the tubes **20** or wall sections **14** may be beveled at the wall **14** or tube **20** ends, such that the joints between sections of the impact wall **14** have a shallow, flat V-shaped indentation. In addition, in the event a vehicle strikes the impact wall **14** at or near a splice unit **34**, the beveled end faces **36** of the splice units **34** and the beveled edges of the tubes **20** or walls **14** serve to minimize the potential that an edge or corner of the splice unit **34** will penetrate the wall of a tube **20** and contact or snag the impacting vehicle, or that an impacting vehicle will snag on an impact wall **14** joint. The configuration of the splice units **34** also results in a "bidirectional" joint between sections of impact wall **14**, in that the beveled end faces **36** of splice units **34** also ensure that the face of the impact wall **14** will remain substantially smooth, continuous, and snag- and pocket-free regardless of the direction of travel of the

impacting vehicle. Finally, the splice units **34** allow for relatively rapid and easy replacement of impact wall **14** sections when necessary, as will be further discussed below.

As best seen in FIGS. **5** and **7**, cable restraint assemblies **16** are positioned along and between the containment wall **12** and the impact wall **14** and serve to removably couple impact wall **14** with containment wall **12**. In a preferred embodiment, the cable restraint assemblies **16** are positioned along and between the walls **12** and **14** at approximately ten (10) foot intervals. As seen in FIG. **7**, the cable restraint assembly **16** generally consists of a cable **40** (preferably ⅜" diameter galvanized wire rope), a ferrule **42** fixed to an end of the cable **40**, and a threaded rod **44** fixed to the other end of the cable **40**. A keyhole plate **46** is positioned over the aperture **30** in the wall of the tube **20** and attached to the wall of the tube **20** as by welding. The keyhole plate **46** has a partially threaded keyhole aperture **48** which receives the ferrule **42** and a keyhole bolt or plug **50**, as seen in FIGS. **5** and **7**. An internally threaded sleeve **52** is embedded in the containment wall **12**, as best seen in FIGS. **4** and **7**, and receives the threaded rod **44**. Wall **12** is thus coupled to wall **14** by placing ferrule **42** through aperture **48** and sliding the cable **40** downwardly into position in aperture **48**. Plug **50** is then threaded into the upper, threaded portion of aperture **48**. Sleeve **52** is anchored in wall **12** and the rod **44** is threaded into the sleeve **52**. In one embodiment (not depicted), the sleeve **52** and cable **40** extend through the entire thickness of the containment wall **12** to provide additional cable anchorage strength. It will be understood that other mechanical coupling systems having threaded, bolted, hooked, or relatively quick-release connection mechanisms known to persons skilled in the art may be used to removably couple impact wall **14** with containment wall **12**. The cable restraint assemblies **16** or other coupling mechanisms serve to position the impact wall **14** adjacent the containment wall **12**, hold the impact wall **14** in an upright, vertical position, prevent the impact wall sections **14** from pulling away from the containment wall **12**, and act to spread the impact load over a greater length of the barrier system **10** by reducing the total amplitude and increasing the period of the bending wave induced in the tubes **20** that comprise the impact wall **14**.

As best seen in FIGS. **1** and **4**, energy-absorbing cartridges **18** are positioned between containment wall **12** and energy-absorbing impact wall **14**. In a preferred embodiment, energy-absorbing cartridges **18** consist of seven (7) DOW or OWENS CORNING extruded polystyrene foam sheets **54**, each approximately two (2) inches thick and having a 15 psi stress rating, sandwiched together to form an energy-absorbing cartridge approximately fourteen (14) inches thick and twenty (20) inches in width. Cartridges **18** are held in position between walls **12** and **14** by friction between the foam sheets **54** themselves, friction between the outermost foam sheet **54** and the wall **14**, and friction between the innermost foam sheet **54** and the wall **12**. The cartridges **18** also fit relatively snugly between walls **12** and **14** and the cable **40** is relatively taught, such that no significant gaps exist between the walls **12** and **14** and the cartridges **18** sandwiched between them.

It will be understood that the energy-absorbing cartridges **18** may be constructed of any number of materials and configurations, including polystyrene foam sheets or blocks, expanded bead polystyrene foam, friable polyurethane foam sheets or blocks of varying or constant thicknesses widths, or rubber or HDPE cylinders or tubes positioned in individual or concentric, telescoping fashion between the walls **12** and **14**. The energy-absorbing barrier system **10** of the present invention may be "tuned" to accommodate virtually any impact condition by adjusting the cartridge **18** material, thickness, width, height, stress rating, and configuration. It will be understood, for example, that cartridges **18** may consist of a number of sheets **54** or blocks having varying widths so that a cartridge **18** has a substantially T-shaped or trapezoidal cross-section as seen from a plan view. The cartridges **18** are relatively easy to remove from and reinstall between wall **12** and wall **14** to enable the user to tune the stiffness and other performance characteristics of the barrier system **10** to match the expected impact conditions for a given site, such as impact speed, vehicle type and weight, and impact angle, and to replace compressed, crushed, cracked, or otherwise damaged cartridges.

In one tested embodiment of the barrier system **10** of the present invention, the energy-absorbing cartridges **18** consisted of seven (7) stacked sheets **54** of OWENS CORNING extruded polystyrene foam having a rating of 15 psi, each sheet **54** having a thickness of two (2) inches, a width of twenty (20) inches, and a height of forty (40) inches. The multi-sheet cartridges **18** were spaced along and between walls **12** and **14** at approximately ten (10) foot intervals on center. This embodiment was tested with an Indy open-wheel style vehicle weighing approximately 2,035 lbs. striking the face of the impact wall **14** at an approximate speed of 143 m.p.h. and an angle of approximately 20.7 degrees. The vehicle contacted the impact wall **14** at a point approximately ten (10) feet upstream of a joint between impact wall sections **14** and slightly downstream of a cartridge **18**, and exited the impact wall **14** at a velocity vector angle of approximately 4.5 degrees. With this particular tube **20** and cartridge **18** configuration, the tests indicated that the impact wall **14** did not contact or "bottom out" on the containment wall **12** and that the deceleration forces applied to the impacting vehicle and its occupant were substantially mitigated. It will be understood persons skilled in the art that the barrier system **10** may readily be tuned for specific applications. The number, material, and dimensions of tubes **20**, the spacing of cartridges **18**, and the configuration, thicknesses, and widths of foam sheets **54** all may be adjusted depending upon several factors, including the expected impact angle, impact velocity, and vehicle type(s) (e.g. INDY open-wheel type and/or WINSTON CUP type vehicle, standard car, truck, etc.).

The barrier system **10** of the present invention may be continuous and surround the entire periphery of a race track or road way, or the system **10** may be positioned at select locations along the periphery of the track or roadway, at turns or high-speed corners, for example. In the event the barrier system **10** is not continuous, transition sections **56** may be provided at the upstream and/or downstream ends of the impact wall **14**, as seen in FIGS. **1** and **6**. These transition sections **56**, as the name implies, provide a smooth transition from the containment wall **12** to the impact wall **14** and reduce the likelihood of a vehicle impacting and snagging on the blunt end of a section of the impact wall **14**. Transition sections **56** may be constructed of tubular members like those of wall **14**, and may be coupled with the adjacent impact wall section **14** by splice units similar to those previously described herein.

In operation, an errant vehicle strikes the face of the impact wall **14**. The hollow structural steel tubes **20** which comprise the impact wall **14** deflect towards the containment wall **12**, compressing and/or crushing the energy-absorbing cartridges **18** between the deflected impact wall **14** and containment wall **12**. To ensure that vehicle and driver deceleration forces are minimized, the tubes **20** and car-

tridges **18** are configured and spaced such that the deflecting impact wall **14** will not contact or "bottom out" on the substantially rigid containment wall **12**, as discussed above. The energy of the impacting vehicle is absorbed by the elastic and/or plastic deformation of the tubes **20**, the compression and/or crushing of the energy-absorbing cartridges **18**, and the crumpling or crushing of portions of the impacting vehicle itself.

In the event of a extremely high-speed impact, a tube or tubes **20**, an entire impact wall section **14**, and/or one or more cartridges **18** may become plastically deformed or otherwise damaged such that replacement of a section of impact wall **14** and/or one or more cartridges **18** is desired. The barrier system **10** of the present invention allows for relatively quick and easy repair and replacement of a damaged section of impact wall **14**. To replace such a section, the cable restraint assembly **16** must be uncoupled from the impact wall **14**, and the splice units **34** on each end of the section to be replaced must be slidably removed from the tubes **20** of the section **14** to be replaced. To accomplish this, the brace bolts **26** and sliding splice bolts **38** are typically first removed or loosened sufficiently such that the splice units **34** are disengaged from the walls of the tubes **20** and may slide and telescope within the tubes **20**. The sliding splice bolts **38** are generally grasped and pulled to the side along the length of the tube slots **28** until the splice units **34** completely clear the joint between the section of impact wall **14** to be replaced and the adjacent section(s). The threaded keyhole plug **50** is then removed from the keyhole aperture **48**. The ferrule **42** and cable **40** are slid upwards from the slot in the aperture **48** into the larger diameter hole portion of the aperture **48** such that the ferrule may be removed from the keyhole aperture **48**. The damaged section **14** may then be removed, and a new, undamaged section **14** installed in its place by coupling the new section **14** to the adjacent section(s) **14** via the splice units **34** and by coupling the new section **14** to the containment wall **12** via the cable restraint assemblies **16**. In the event one or more energy-absorbing cartridges **18** are cracked, crushed, plastically deformed, or otherwise damaged, new cartridges **18**, or parts thereof, may be readily replaced. This is accomplished by removing the damaged cartridge(s) **18** and positioning the new cartridge(s) **18** against the containment wall **12** before a wall section **14** is installed or by simply sliding new cartridge(s) **18** between already-installed and coupled walls **12** and **14**.

It will be seen from the foregoing that this invention is one well adapted to attain the ends and objects set forth above, and to attain other advantages which are obvious and inherent in the device. It will be understood that certain features and subcombinations are of utility and may be employed without reference to other features and subcombinations. This is contemplated by and within the scope of the claims. It will be appreciated by persons skilled in the art that the present invention is not limited to what has been particularly shown and described above. Rather, all matter shown in the accompanying drawings or described above is to be interpreted as illustrative and not limiting.

We claim:

**1**. An energy-absorbing vehicle barrier system, comprising:

a substantially rigid outer containment wall;

an inner, energy-absorbing impact wall spaced from said containment wall, said impact wall having an interior face facing said containment wall and a vehicle-side exterior face, said exterior face presenting a substantially smooth, uniform surface, said impact wall comprising a plurality of impact wall sections in end-to-end, abutting relation, said impact wall sections each comprising a plurality of tubes coupled with one another;

a coupling assembly adapted to removably couple said impact wall to said containment wall; and

at least one energy-absorbing cartridge positioned between said impact wall and said containment wall.

**2**. The barrier system of claim **1**, said system further comprising at least one splice unit coupled between adjacent said wall sections.

**3**. The barrier system of claim **1**, wherein said exterior face of said impact wall is coated with a substantially smooth, friction-resistant material.

**4**. The barrier system of claim **1**, wherein said energy-absorbing cartridge is at least one foam member.

**5**. The barrier system of claim **1**, wherein a plurality of said cartridges are positioned between said impact wall and said containment wall in spaced relation to one another.

**6**. The barrier system of claim **1**, wherein said energy-absorbing cartridge is at least one tubular member.

**7**. The barrier system of claim **1**, wherein said coupling assembly includes a cable having a first end and a second end, said first end fixed to said containment wall and said second end removably coupled with said impact wall.

**8**. The barrier system of claim **2**, wherein each said splice unit is a member slidably engaged with corresponding said impact wall sections.

**9**. The barrier system of claim **8**, wherein each said splice unit has a pair of beveled ends, said ends received in adjacent said impact wall sections.

**10**. The barrier system of claim **1**, wherein said tubes are hollow structural steel members having a rectangular cross section.

**11**. The barrier system of claim **10**, wherein said tubes are coupled with one another by discontinuous welds.

**12**. The barrier system of claim **1** further comprising a transition section having first and second ends, said first end of said transition section coupled with an end of said impact wall, and said second end of said transition section coupled with said containment wall.

**13**. The barrier system of claim **1**, wherein said tubes are constructed of ASTM A500 Grade C steel.

**14**. An energy-absorbing vehicle barrier system for use in an environment having a substantially rigid containment wall, comprising:

an inner, energy-absorbing impact wall spaced from the containment wall, said impact wall having an interior face facing said containment wall and a vehicle-side exterior face, said exterior face presenting a substantially smooth, uniform surface, said impact wall comprising a plurality of impact wall sections in end-to-end, abutting relation, said impact wall sections each comprising a plurality of tubes coupled with one another;

means for removably coupling said impact wall to the containment wall; and

at least one energy-absorbing cartridge positioned between said impact wall and the containment wall.

**15**. The barrier system of claim **14**, said system further comprising means for removably coupling together adjacent said wall sections.

**16**. The barrier system of claim **14**, wherein said energy-absorbing cartridge is at least one foam member.

**17**. The barrier system of claim **14**, wherein a plurality of said cartridges are positioned between said impact wall and said containment wall in spaced relation to one another.

**18**. The barrier system of claim **14**, wherein said exterior face of said impact wall is coated with a substantially smooth, friction-resistant material.

**19**. The barrier system of claim **14**, wherein said tubes are constructed of ASTM A500 Grade C steel.

**20**. The barrier system of claim **14**, wherein said energy-absorbing cartridge is at least one tubular member.

**21**. The barrier system of claim **14**, wherein said tubes are hollow structural steel members having a rectangular cross section.

**22**. The barrier system of claim **21**, wherein said tubes are coupled with one another by discontinuous welds.

**23**. The barrier system of claim **14**, further comprising a transition section having first and second ends, said first end of said transition section coupled with an end of said impact wall, and said second end of said transition section coupled with the containment wall.

**24**. The barrier system of claim **14**, wherein an edge of said exterior face of said impact wall is beveled.

* * * * *