University of Nebraska - Lincoln
DigitalCommons@University of Nebraska - Lincoln

Architectural Engineering -- Faculty Publications | Architectural Engineering

1-1-2003

Improving Building Control and System Operation Through the Continuous Commissioning® Process: A Case Study

Nathan Redmann
University of Nebraska-Lincoln

Mingsheng Liu
University of Nebraska–Lincoln, mliu2@unl.edu

Follow this and additional works at: http://digitalcommons.unl.edu/archengfacpub

Part of the Architectural Engineering Commons

Redmann, Nathan and Liu, Mingsheng, "Improving Building Control and System Operation Through the Continuous Commissioning® Process: A Case Study" (2003). *Architectural Engineering -- Faculty Publications.* Paper 37.
http://digitalcommons.unl.edu/archengfacpub/37

This Article is brought to you for free and open access by the Architectural Engineering at DigitalCommons@University of Nebraska - Lincoln. It has been accepted for inclusion in Architectural Engineering -- Faculty Publications by an authorized administrator of DigitalCommons@University of Nebraska - Lincoln.

Improving Building Control and System Operation Through the Continuous Commissioning® Process: A Case Study

Nathan Redmann
Research Associate

Mingsheng Liu, Ph.D., P.E.
Associate Professor

Architectural Engineering
Energy Systems Laboratory
University of Nebraska – Lincoln
Omaha, Nebraska

ABSTRACT

Utilization of the Continuous Commissioning® process is presented in the case of the Consolidated Mission Support Center office building at Travis Air Force Base in Travis, California. The CC® process was applied to the building in early 2003. The examination of the heating, ventilating, and air-conditioning (HVAC) and control systems revealed several areas where considerable improvement could be made, including air handling unit (AHU) operational parameters, terminal box and water loop operation, and Energy Management and Control System (EMCS) functionality. It also aided in the identification of mechanical systems needing repair. The optimization of the HVAC systems and advanced utilization of the EMCS reduced the combined heating and cooling energy consumption by 26% without capital intensive upgrades. Cooling energy decreased by 10%, heating energy was cut by over 40%, and fan power decreased by 28%. A hidden benefit to the implementation of the CC® process is the reduction in the human capital required to operate the building. Prior to commissioning, significant time was spent changing system operating setpoints in an attempt to save energy. These efforts are no longer required.

INTRODUCTION

The Consolidated Mission Support Center at Travis Air Force Base is a five story, 191,000 square feet office facility. It was constructed in 1943 to house the Fairfield-Suisun Army Base Hospital and redesigned in 1993 to become the Consolidated Mission Support Center. The building serves as the headquarters of the 15th Air Force and is also used as an office complex for the 60th Air Mobility Wing of the United States Air Force.

HVAC Systems

Sixteen variable volume air handling units ranging from 3,500 to 21,000 cfm supply air to the zones of the building. Cooling is accomplished using three 172 ton air cooled chillers with a primary/secondary constant volume pumping loop totaling 67.5 hp. Heating is supplied by four separate hot water loops with single natural gas pulse boilers and redundant constant speed pumps. The total connected load for the hot water pumps is less than 9 hp. Modern DDC controls were incorporated into the redesign in 1993, however all air handling unit valve and damper actuators remain pneumatic.

Energy Monitoring

The majority of the facility is not monitored for energy use. The meter that measures whole building electricity consumption was not functioning properly, therefore producing questionable results. The only areas of the facility that are monitored for electricity consumption are the three air cooled chillers. Natural gas is monitored at the service entrance to the building; however, historical values provided by the base operations staff appeared inaccurate. It was determined that the values were not correlated with the meter's multiplier or pressure factor.

COMMISSIONING

The Continuous Commissioning® process was applied to the building in early 2003 as part of the Western Power Grid Peak Demand and Energy Reduction Program in support of the Office of the Deputy Under Secretary of Defense for Installations and Environment.

Facility Survey

An assessment of the facilities HVAC and control systems was conducted during the initial site visit to establish the areas where implementation of

Table 1. Pre-commissioning control strategies and associated setpoints

Parameter	Control Strategy	Setpoint(s)
Supply fan speed	Constant remote static pressure setpoint (varied by season)	0.75 - 1.75 in. w.c.
Supply air temperature	Constant setpoint (varied by season)	62 - 70°F
Cooling coil valve	3-way mixing	N/A
Economizer enable	Enabled when $T_{oa} < T_{ra} + 2°F$	N/A
Terminal box airflow control	Vary from 100% to minimum based upon room temperature	Minimum airflow - 60%
Chilled water pump	Constant speed primary/secondary system	On when $T_{oa} > 65°F$
Zone temperatures	Heating/Cooling setpoints depending upon room temperature	68°F - Heating 78°F - Cooling

Continuous Commissioning® would provide the greatest benefit. As a result of the assessment, an extensive survey of the systems operating characteristics was conducted utilizing field measurements and short-term data logging. The investigation revealed that the energy management and control system was underutilized, resulting in significant energy consumption penalties. The pre-commissioning control strategies and associated setpoints are listed in Table 1. The parameters where multiple setpoints are shown result from differences between individual air handling units or manual setpoint changes. Each of these control strategies was determined from an examination of the control system or by control system manipulation.

The survey also identified numerous instances where mechanical equipment had failed or was in disrepair.

Diagnostics

A systematic analysis of the problems found during the facility survey revealed several terminal box dampers and flow stations that were working incorrectly, resulting in zero or minimal airflow to the zone. It also showed that the actual terminal box damper positions were not calibrated with the output to the control system, producing questionable results when monitoring damper position. Each of these problems were addressed by replacing actuators, re-calibrating flow sensors or performing soft corrections to the algorithm for calculating airflow, and correlating damper speed and travel distance.

Major CC® Measures

Based on the control strategies and setpoints documented during the facility survey, improved control strategies were developed for supply fan speed control, supply and mixed air temperature control, economizer enable control, and terminal box airflow control. Also, cooling coil valves were converted to 2-way control to reduce chilled water flow by closing the manual ball valves in the bypass line from the bottom or normally open port of the 3-way valves. In conjunction, the existing primary/secondary pumping system was converted to a single loop. The post-commissioning control strategies are listed in Table 2.

The parameters where multiple setpoints are shown result from differences between individual air handling units. Additional information of various post-commissioning control strategies is presented in the following sections.

Table 2. Post-commissioning control strategies and associated setpoints

Parameter	Control Strategy	Setpoint(s)
Supply fan speed	Constant remote static pressure setpoint	0.35 - 0.65 in. w.c.
Supply air temperature	Reset based upon outside air temperature	57 - 70°F
Cooling coil valve	2-way	N/A
Economizer enable	Constant optimal enable setpoint	68°F
Terminal box airflow control	Vary from 100% to minimum based upon room temperature	Minimum airflow - 30%
Chilled water pump	Constant speed single loop	On when $T_{oa} > 65°F$
Zone temperatures	Heating/Cooling setpoints depending upon room temperature	70°F - Heating 75°F - Cooling

In addition to changing control strategies, improvements were made to increase the level of human comfort within the facility. As a result of the energy crisis that hit California in 2000, the operations staff at Travis Air Force Base was given the task of conserving energy. One of the solutions readily available to the staff was to increase/decrease the indoor environmental temperature setpoints. This indeed decreased the cooling and heating energy consumption. However, it amplified the number of worker complaints, increased the connected convenience outlet load due to desk fans and foot heaters, and decreased the overall productivity of the workers. By changing the temperature setpoints to a range within ASHRAE specified guidelines for human thermal comfort, the overall cost of doing business, energy and human capital, decreases.

Supply Fan

In the past, complex static pressure reset schedules were developed or intricate terminal box damper tracking was used to minimize supply fan energy consumption [1,2,3,4]. These strategies were often difficult to implement and were always labor intensive to create.

In this case, constant static pressure control was maintained with a reduced setpoint. The difference is the location of the static pressure sensor. In contrast to the often mentioned location of 2/3 downstream of the supply fan, the static pressure sensor was moved to the entrance of the most hydraulically remote terminal box on the system. By doing so, the system is essentially self resetting. The supply fan is controlled to the lowest possible speed, while maintaining adequate static pressure in the duct system to satisfy all terminal box airflow requirements. The new setpoints are based on terminal box pressure drops at maximum design flow. Under partial load conditions the setpoints could be reset to achieve further fan power reduction, but the additional savings is minimal. Therefore, this strategy approximates the optimal reset schedules developed in the past.

Figure 1 shows a trend of the VFD speed of a 7.5 hp supply fan before and after relocating the static pressure sensor and reducing the static pressure setpoint. The period where the VFD speed was 100% occurred during the relocation of the static pressure sensor. In this instance, the approximate reduction in VFD speed was 13% with an associated 35% reduction in fan power.

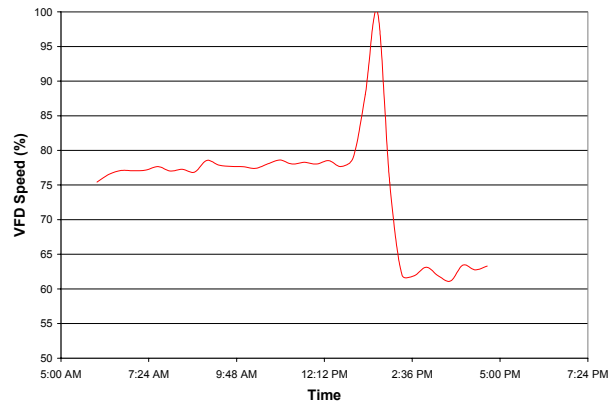

Figure 1. Illustrative pre & post-commissioning VFD speed

Supply Air Temperature

Resetting supply air temperature to minimize reheat requirements in variable air volume systems is commonly applied during the Continuous Commissioning® process [5,6]. The existing control system in this case was programmed to control to a constant supply air temperature setpoint and was not designed to incorporate a reset schedule. This oversight in control utility forced the operations staff to manually reset the supply air temperature to account for seasonal changes in average outside air temperatures, often resulting in increased fan power and reheat energy during unseasonably warm or cool weather.

To correct this issue, an optimal supply air temperature reset schedule was developed from an analysis of the air handling unit and terminal box operating characteristics. The new schedule incorporates the improved air handling unit and terminal box control. The air handling unit reaches its minimum airflow and minimum fan power at an outside air temperature of 62°F and remains there as the supply air temperature is increased to minimize reheat. Figure 2 shows the optimal supply air temperature as a function of outside air temperature.

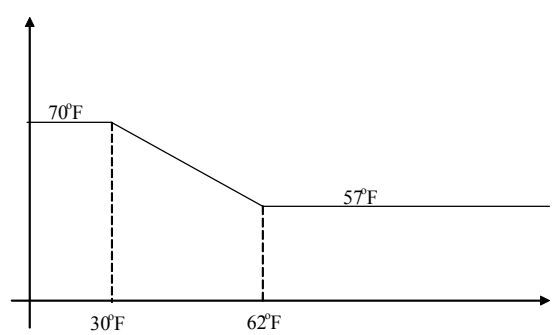

Figure 2 Supply air temperature reset schedule

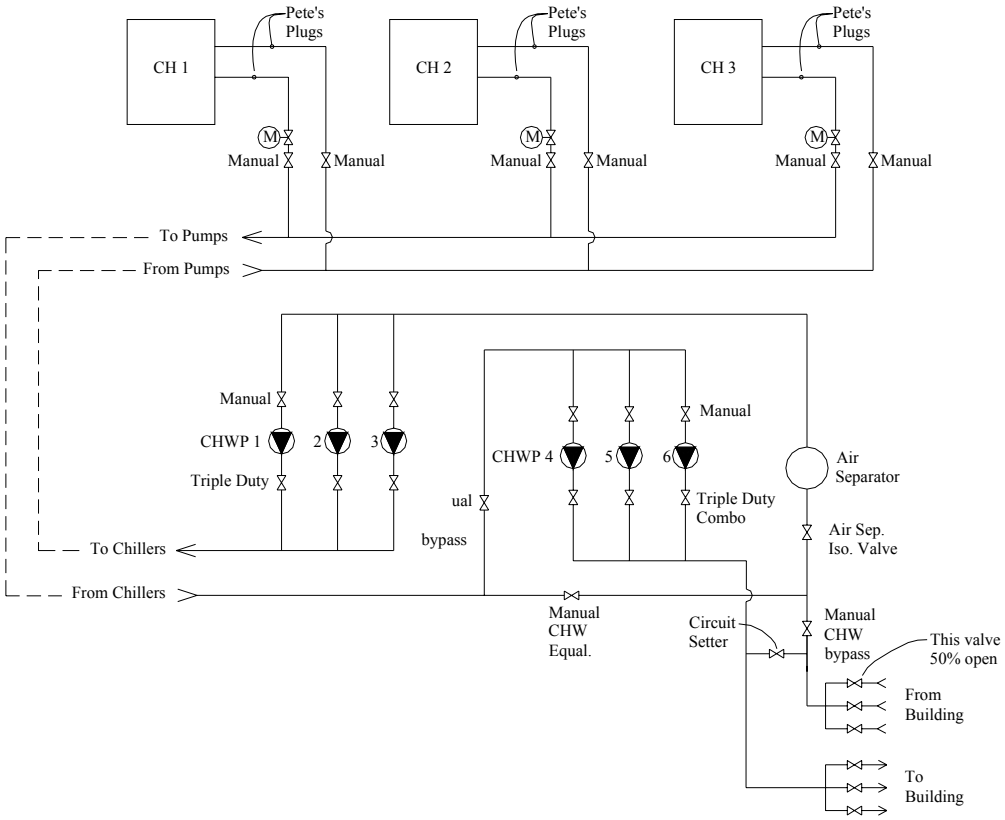

Figure 3. Chilled water system schematic

Also, a change to the supply air temperature setpoint has a direct effect on the efficient control of the entire air handling unit, specifically mixed air temperature control. Since the supply air temperature varies with the outside air temperature, the mixed air temperature required during economizer periods should also vary. Therefore, the mixed air temperature setpoint is now a function of the supply air temperature setpoint. This strategy ensures that the cooling coil valve does not open until the economizer dampers are 100% open.

Chilled Water System

The chilled water system for the building is shown in Fig. 3. Additional information on chillers and pumps is found in Table 3.

Table 3. Chiller and pump information

Equipment	Description
CH-1,2,&3	172 ton air cooled recip. chiller
CHWP-1,2,&3	7.5 hp primary, 320 gpm at 45 ft.
CHWP-4,5,&6	15 hp secondary, 320 gpm at 80 ft.

Based on the design information for the pumps, a calculation was made to determine the system operating parameters if the primary pumps were removed from the system. As seen in Table 3, the original design was for 320 gpm. By disabling the primary pumps and operating the system with the secondary pumps alone, the flow rate will be 82% of the rated design flow. Since anecdotal evidence suggests that three chillers never operate together under the current working conditions, the 82% capacity from the secondary pumps alone (thus 423 tons capacity from the three chillers) permits the disabling of the primary pumps. Upon closing the valve in the by-pass line (Manual CHW Equal. Valve in Fig. 3), measurements of the chilled water flow were made with and without the primary pumps operating. The tests revealed that the actual flow rates were significantly higher than design. The measured data are presented in Table 4.

Table 4. Chilled water flow measurements

Test	Flow range (gpm)
CHWP-1&4	390 - 420
CHWP-1,2,4,&5	680 - 640
CHWP-4	330 - 305
CHWP-4&5	600 - 550

Because three chillers are never operated simultaneously, a test with all three pumps running was not performed.

Based on the measured results, it was determined that disabling the primary pumps and operating the secondary pumps alone was sufficient to meet all cooling demands within the facility. This effort, combined with chilled water supply temperature reset, saves over 10% of the buildings annual cooling energy (including a 33% reduction in pump power).

RESULTS

The combination of these measures resulted in significant energy savings. The lack of utility metering makes the effect on actual energy consumption difficult to materialize. The only source of metered data was for the chiller electricity consumption. The results of the combined commissioning of air handling unit and terminal box control reduced the chiller energy by 3%. Along with the conversion of the primary/secondary pumping system, the building overall annual cooling energy was reduced by 10%. Additionally, based on one time measurements of both pre and post commissioning fan power, the overall fan energy savings for the building is 28%. The most difficult energy savings to quantify is heating consumption. The effect of reducing the minimum terminal box airflow to 30% is slightly offset by the increase in the room temperature heating setpoint, however, a simulation of the buildings heating energy both pre and post commissioning reveals a 40% decrease in the annual total.

Because no measured data exist for the utility consumption of the building, the aggregate cooling, heating, and fan energy savings were predicted using a modified ASHRAE bin method and the results were correlated to all data available. Overall, the application of Continuous Commissioning® results in an annual monetary savings of $26,000.

CONCLUSION

A number of factors contributed to the success of the application of Continuous Commissioning® to the Consolidated Mission Support Center. First, the contributions of the operations staff expedited the commissioning process with their free exchange of information. The condition of the facility and its equipment enabled the commissioning team to concentrate on systems optimization rather than repair. Finally, the efficiency of the CC® team and their ability to apply real world solutions in a timely manner proved invaluable.

The optimization of the HVAC systems and advanced utilization of the EMCS reduced the combined heating, cooling, and fan energy consumption by 26% without capital intensive upgrades, while improving occupant thermal comfort and operations staff productivity. This project provides an excellent example of the benefits of Continuous Commissioning® and how it can be applied to military buildings in the future.

ACKNOWLEGEMENTS

The authors would like to thank the following individuals for their efforts towards the successful completion of this project.

David Claridge, Ph.D., P.E. – Texas A&M University
David Yuill – University of Nebraska – Lincoln
Ed Wells, P.E. – Frontline Systems, Inc.
Mike Martin – Brooks Energy & Sustainability Lab

Also, a special thanks to the personnel at Travis Air Force Base who accommodated the CC® team in every way possible, specifically Edward Curran and William Zito.

REFERENCES

1. Hartman, T. **1989**. "RAV – A new HVAC Concept." *Heating/Piping/Air Conditioning.* July. 69-73.
2. Wei, G., et. al. **2000**. "Improved Airflow Control Logic." *Proceedings of the Twelfth Symposium on Improving Building Systems in Hot and Humid Climates.* May 15 -16, San Antonio, TX. 195-198.
3. Liu, M., et. al. **1998**. "System Optimization Saves $195,000/yr. in a New Medical Facility." *Proceedings of the 6th National Conference on Building Commissioning.* May 18-20, Lake Buena Vista, FL. 14.2.1-14.2.11.
4. Warren, M., et. al. **1993**. "Integrating VAV Zone Requirements with Supply Fan Operation." *ASHRAE Journal.* V35, 4. 43-46.
5. Wei, G., et. al. **2000**. "Optimize the Supply Air Temperature Reset Schedule for Single-Duct VAV Systems." *Proceedings of the Twelfth Symposium on Improving Building Systems in Hot and Humid Climates.* May 15 -16, San Antonio, TX.
6. Norford, L. K., et. al. **1986**. "Control of Supply Air Temperature and Outdoor Air Flow and Its Effect on Energy Use in a Variable Air Volume System." *ASHRAE Transactions.* V92. 30-45.