University of Nebraska - Lincoln
DigitalCommons@University of Nebraska - Lincoln

Proceedings of the Twelfth Vertebrate Pest Conference (1986)

Vertebrate Pest Conference Proceedings collection

3-1-1986

THE MECHANICAL CONTROL OF BUSHPIG, *Potamochoerus porcus*, IN ZIMBABWE

Michael La Grange
Department of National Parks and Wild Life Management, Harare, Zimbabwe

Follow this and additional works at: http://digitalcommons.unl.edu/vpc12

Part of the Environmental Health and Protection Commons

La Grange, Michael, "THE MECHANICAL CONTROL OF BUSHPIG, *Potamochoerus porcus*, IN ZIMBABWE" (1986). *Proceedings of the Twelfth Vertebrate Pest Conference (1986)*. Paper 36.
http://digitalcommons.unl.edu/vpc12/36

This Article is brought to you for free and open access by the Vertebrate Pest Conference Proceedings collection at DigitalCommons@University of Nebraska - Lincoln. It has been accepted for inclusion in Proceedings of the Twelfth Vertebrate Pest Conference (1986) by an authorized administrator of DigitalCommons@University of Nebraska - Lincoln.

THE MECHANICAL CONTROL OF BUSHPIG, *Potamochoerus porcus*, IN ZIMBABWE

MICHAEL LA GRANGE, Department of National Parks and Wild Life Management, Harare, Zimbabwe.

ABSTRACT: Bushpig, Potamocheorus porcus, occurring naturally in the high rainfall areas of Zimbabwe, have become a major threat to maize producers in the country. Traditional means of control including hunting have been unsuccessful in keeping the numbers to a tolerable level owing to the secretive and cunning nature of the animal. The use of poisons has been discouraged because of indiscriminate use and problems of secondary poisoning, so alternative methods of mechanical control were sought. Several methods evolved during experimentation, producing a strategy to control bushpig throughout the year.

INTRODUCTION

Bushpig occur throughout Zimbabwe. Smithers (1966), Dorst and Dandelot (1970) show a wide distribution throughout Central and South East Africa, relating distribution to high forests and their fringes and thick bush country. Personal observations indicate that bushpig are more numerous in the higher rainfall areas of Zimbabwe near marshy seeps or vlei areas. Smither records the average mass of an adult pig to be 90.0 kg. Dorst and Dandelot record the average between 54.4 and 81.8 kg, while Kenmuir and Williams (1975) record an average mass of 80 kg. Bushpig are gregarious and occur in sounders comprising of 12 or more individuals in Zimbabwe.

Each sounder is led by a dominant boar and defence behaviour in the protection of feeding ground has been recorded by Skinner et al. (1976). They noted some degree of tree marking, particularly near paths used by pigs in a study area in the Transvaal province of South Africa.

Bushpig are omnivores, eating a wide range of food, such as berries, fruit, roots, insects and worms, keeping in constant communication with each other during foraging by emitting low grunts. Jones (1978) found that they are unable to root in dry ground. In his trials at Matopos National Park rooting increased 1 or 2 months after the onset of rains, which occur from November or December in Zimbabwe. This fact may be important in the distribution of bushpig, the animals favouring areas where natural seeps are more abundant in order to subsist during the dry months in Zimbabwe. During trials in 1981 observations indicated that bushpig movement increased 4 to 5 days after good soaking rains. Prior to this they remained near wet areas, foraging for food at night. Bushpig are nocturnal, lying up in dense undergrowth during the day. In Zimbabwe they take refuge in dense riverine thickets or at the base of small hillocks. Broken country comprised of shallow soil overlying rock with large natural seeps appears to be favoured with greater numbers of bushpig being recorded. When undisturbed they often rest in the mature maize during the day or the nearest suitable thicket to the food source.

They are aware of the minute changes in their environment--for example, newly erected fences--which they will generally avoid. It is related how a domestic bushpig would investigate all new activity during family evening walks.

Unlike most animals, bushpig avoid obvious paths when commuting and where possible they proceed under thickets or tall grass, presumably to take advantage of cover. They are wedge-shaped and move through thickets with comparative ease, forcing the vegetation over their bodies, where most other species jump or step over obstacles.

Bushpig have a keen sense of hearing and smell, avoiding new areas or strange obstacles with 'foreign' odours. Recent trials indicate that even when attracted to bait they will abstain if they become suspicious.

Bushpig give birth to 3 to 7 young during the early rains November to February. Nests are made of grass pushed into large stacks, under which the female gives birth and nurses a litter.

Their success in the farming areas has been attributed to the lack of natural predators, such as leopards, and their secretive nocturnal habits. Increases in soil moisture resulting from irrigation overflow and the encouragement of bush encroachment may also be contributing factors.

Two recent country surveys, Grobler (1973) and La Grange (1981) indicate an increase in bushpig over the last 10 years. This estimate is subjective and the apparent increase may just be a reflection of renewed interest caused by maize price increase which has led to an increase in maize production over the years and the degree of rainfall those seasons.

Pressure has come from the commercial farming sector to find a satisfactory solution to the control of bushpig.

The survey indicated that bushpig damage tends to be more severe in areas where lands are found in small pockets surrounded by numerous hills and vleis, for example, the Eastern Highlands of Zimbabwe. In more open highland areas near Harare, where undivided lands are large with fewer hills and vleis, damage appeared to be proportionally smaller.

QUESTIONNAIRE RELATING TO BUSHPIG PROBLEMS

A questionnaire was sent to prominent maize producers early in 1981 to obtain basic facts on the pig problem. One hundred one were returned, giving a 78% return, from which the following information was extracted:

Total hectarage of maize under consideration	=	13,785
Total pigs destroyed during 1980/81 season	+	942
Number of pigs destroyed ranged from 0-84/farm/season		
Average kill was ± 9.3 pigs/farm or 1 pig/15 hectares		

Most of the pigs killed were by crop guards armed with 12 bore shotguns and during concentrated drives in maize lands and adjacent thickets.

The estimated loss per pig ranged between 100 kg and 3,000 kg of maize per season, producing an average of 800 kg per season. (The upper limit is probably exaggerated.) The figure represented a loss of $100 by each pig during that season.

Traditionally, bushpigs have been hunted at night by crop guards specifically employed by individual farmers. The crop guards patrol the lands at night, usually commencing along paths outside the maize or paths within the maize until they hear bushpigs breaking the stalks or sounds of feeding pigs. The guard then attempts to approach the pigs through the maize using the wind to advantage. The pigs are approached to within 10 metres when the guard fires in the direction of the noise. Reports indicated that firing this way in total darkness there is less than a 10% chance of killing the pig. The more successful guards developed techniques such as covering themselves with cattle dung which has enabled them to approach to within a few metres. The survey indicated skepticism in the success of the method. However, sources indicated that on three occasions kills up to 60 pigs were achieved during the 1980/81 season. Bushpig easily succumb to 12 bore shotguns using cartridges heavier than AAA, even when the shot is poorly placed. Experienced trackers had more success by tracking down the animals from where they left the lands early each morning. Drives were also arranged to drive the pigs out of the lands or anthills towards concealed hunters in ambush. Hunting success was increased by mowing the grass in a 100-metre strip around the maize which bushpigs are forced to cross.

Dogs have been effectively used where they have been trained to corner pigs which then were destroyed using a small-calibre weapon or even spears. However, most farmers are reluctant to have pack dogs on their farms as the dogs are nonselective when chasing animals.

Only one farmer on the survey was satisfied with these methods of control; the remainder felt that more efficient methods were needed.

PREVIOUS TRIALS IN ZIMBABWE

Work was carried out in Matopos National Park by Grobler (1973) who investigated the feasibility of a fenced boma for the control of bushpig. An area 100 x 100 metres was fenced using a fence 2.5 metres high. A 2-metre section was removed and a fenced corridor erected into the boma from this position for 2 metres, tapering to an 800-mm gap where a sturdy gate was placed. Several types of bait were used, ranging from offal to cattle cubes. The system proved successful and 28 pigs were caught on one occasion. Above-average rainfall was experienced in the area that year.

The Commercial Grain Producers Association gave a grant of $5,000 to the Department of National Parks and Wild Life Management in 1981 for the development of a bushpig boma based on the results of Grobler's work and similar trials conducted in South Africa. This was increased by a further $2,400 in 1982.

At the time of experimentation, only Telodrex (Telodrin or Isobensan) was effective in the control of large numbers of bushpig. This poison, however, was highly persistent with high risks of secondary poisoning, particularly to avian species as carcasses were rarely recovered. This method of control was therefore discarded in compliance with a resolution passed by the world conservation agencies.

The Department formed a Problem Animal Research and Control Unit, (P.A.R.C.U.) based at Mvurwi, now known as Management Unit No. 1, tasked to undertake research into the problem commencing in April 1981.

AREAS OF RESEARCH

Although considerable work has been carried out on the basic biology of bushpig with particular emphasis on feeding, little literature was available on control techniques. The unit decided to approach the problem on a wider basis than originally dictated in the terms of the grant, not only investigating the boma system but it also looked in all possible avenues of mechanical control other than poisons.

It was reasoned that control could be effective in three areas where pig movement took place: 1) In maize lands on which they depredate; 2) Within wet vleis or seeps where pig are found during the dry season; and 3) Along paths to and from these areas and in daily places of refuge.

This approach resulted in the following possibilities of experimentation:

a) Use of fixed boma near commercial lands;
b) Portable bomas in "wet" areas during the dry season:

c) Protection fences around lands;
d) Development of trap guns;
e) Modification of shotguns to improve upon shooting blind at night.

METHODS AND RESULTS

Fixed Boma

The method was designed to capture bushpig immediately prior to the commercial crop of maize coming in cob, which in Zimbabwe occurs in February/March. The method relied upon establishing an early "trap crop" of maize to attract bushpig before they would be attracted to the commercial crop. The crop was fenced off by pig-proof wire providing an entrance through a gate which could be closed off once they had entered to feed (Figure 1).

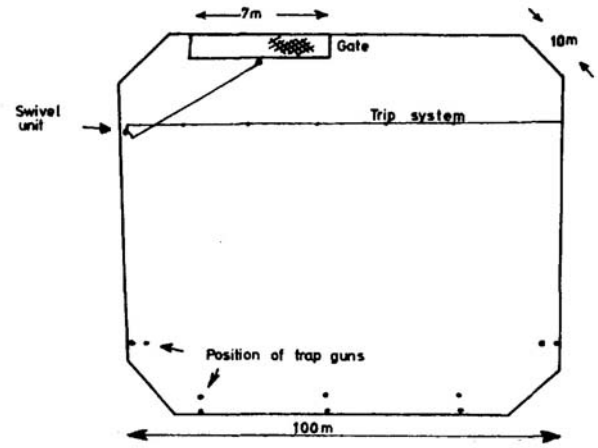

Figure 1. Fixed broma layout.

Eight bomas were established throughout the maize growing areas. They were varied in shape and size covering between 1/2 to 1 hectares in extent. Quick maturing varieties of maize, such as R201, were planted in August/September and established by irrigation so that the trap crop matured to the cobbing stage during November/December, coinciding with the normal expected planting rains for the commercial crop. Unfortunately, the maize in four of the eight bomas was severely stunted during the dry hot months producing a poor yield; however, two bomas produced a good stand of maize. Different types of fence were employed; however, these were soon standardized to 40-mm diamond mesh when it became obvious that the others were not pig-proof. The height of the fence varied between 1 metre and 2 metres and was buried down to a depth of 30 cm. The base of the fence was tied to a taut wire, strained at the bottom to prevent the pigs from lifting it up. The corners of the bomas were bevelled to prevent pigs attacking them. Initially, drop gates of one metre wide were used which were manually tripped once the pigs had entered. Later it was realized that pigs were reluctant to move through narrow confines so these gates were replaced with a 7-metre swing gate which tripped automatically by the pigs. The gate was also large enough to permit access by tractor and implements to establish the crop.

Results

A total of 25 pigs was destroyed over the experimental period and 35 porcupines were captured in three of the eight bomas. No pigs entered the other five bomas, although pigs did visit on three occasions late in the season when the commercial crop was attractive to them. In the three bomas, four additional sounders entered undetected and a further three sounders escaped either underneath the fence (due to poor erection) or through the gate. It was also observed that once the bushpig had been caught others were reluctant to enter again, although they visited the site on several occasions thereafter.

The poor results were generally attributed to the late soaking rains experienced that season which turned out to be the worst drought recorded in Zimbabwe in 20 years of recording. In two of the bomas the pigs were attracted beforehand to the entrance gate using fermented maize, and a third boma was established immediately adjacent to a wet seep where pigs were known to frequent during the dry season. Based on these observations and work elsewhere, it was presumed that bushpig were reluctant to leave their known food resources to search for food elsewhere before the ground became soaked. This observation was confirmed during subsequent seasons. As the rains were late, the trap crop was not discovered until late in the season when the commercial crop had become attractive to them. Recent studies by Jones showed that bushpig were only able to root in wet ground where soil moisture is relatively high above 70%. As this did not occur, pig activity generally was reduced compared to the previous season. Similar observations were made during the 1982/83 and 1983/84 season where again poor rains were experienced resulting in comparatively less pig movement. During the 1984/85 season when above-average rainfall was recorded, the reverse was experienced where an apparent increase in pig numbers was reported.

Results indicated that bomas should not be established near hills, rivers and tall stands of woodland as they were quickly invaded by baboon and monkeys. A strip of virgin bush or grassland near the entrance proved necessary as pigs disliked moving through open land. Observations indicated that human activity near the boma or modifications to the system resulted in the pigs avoiding the boma.

As the system cost $2,500 to build, a minimum of 25 pigs must be caught to render the system economical. The cost of establishing the crop was not considered as this was offset by reaping the crop later.

Conclusion

Considering the results and the work done earlier by Grobler, fixed bomas can have a role to help reduce the pig problem provided that soaking rains are experienced early enough so that the crop is discovered well before the commercial crop becomes attractive. With success being dependent upon early soaking rains, however, the method has not been generally recommended.

Portable Bomas

During experimentation with fixed bomas it was realized late in the dry season that potential existed for the construction of a portable boma to attract pigs before fixed bomas became an attraction (Figure 2). This was particularly significant during the 1981 and 1982 dry season when the bushpig only found the fixed bomas late in the season being concentrated in wet areas. Later studies indicated that bushpigs were stressed at this stage responding readily to bait placed in these areas.

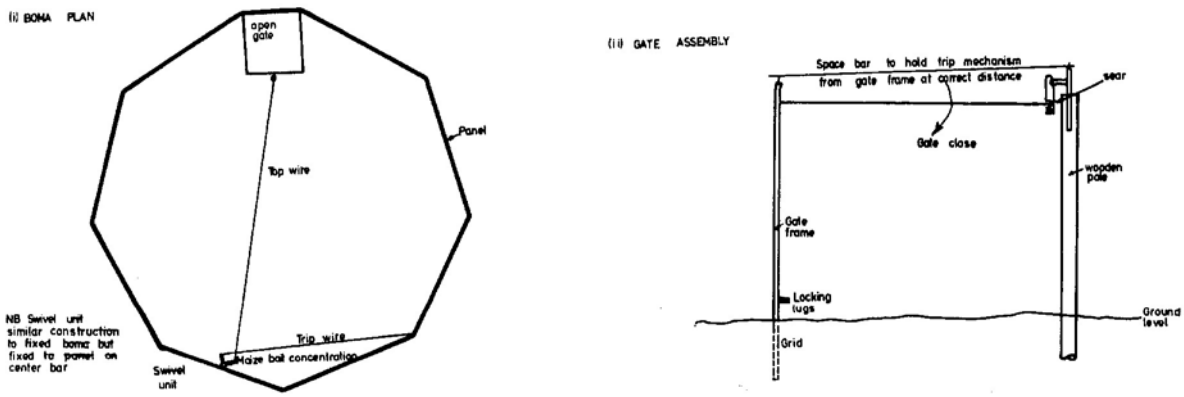

Figure 2. Portable boma layout and gate assembly.

To facilitate transportation of the boma and ease of erection it was decided to make up the fence in panels. Each of the eight panels was constructed from 20 mm x 20-mm square tubing welded into a frame 2.95 metres x 1.4 metres. The panels were connected together using binding wire to form a circle encompassing an area approximately 8 metres in diameter, buried to a depth of 30 cm. The diamond mesh tied to the frame was well supported at the base of the frame which reduced the possibility of pigs lifting up the fence as experienced in the fixed boma.

Initially, drop gates were used to trap the pigs which were tripped automatically by the pigs touching a trip-wire placed at the back of the boma. Upon reflection later, for similar reasons as in the fixed boma, the gate was modified to a swing type 1.5 metres wide. It had two locking lugs at the base which closed behind the gate once it slammed shut, effectively locking it. Various baits were used to attract the pigs but it was soon discovered that the pigs preferred fermented maize. The bait was prepared by soaking 90 kg of maize in a 200-litre drum, bringing the water to the surface of the maize into which was added one tin of yeast with 0.5 kg of brown sugar to start the fermenting process. Water was added to compensate for the swelling of the maize 24 hours later. The maize initially took 2 weeks to ferment. However, when fresh maize was used to top-up the drum, the fermenting process was quicker.

The bushpig took to the fermented maize readily and feeding spots were established where fresh sign of pig foraging was evident. Heaps of fermented maize were placed at each site and the portable boma placed over them once the pigs were feeding regularly. Several feeding spots were established simultaneously and the boma rotated to each in turn. Owing to the limited available time for experimentation, trials were only conducted on one property. Experiments with the boma continued well into the rains and were terminated at the end of February 1982.

Results

Due to the late timing of the experiment the system was only successful for 3 weeks after which soaking rains were experienced. Thereafter the pigs were not attracted to the fermented maize although they visited the bait on several occasions throughout January and February.

Once a boma had been placed over an established feeding zone the pigs took 4 to 7 days to enter, though they visited the area each evening immediately after it had been set up.

Two sounders of pigs entered the boma but only three of one sounder were captured successfully. The second sounder managed to escape by using a clump of tree to climb over the top of one panel. Although results were questionable, nine porcupine were caught and released. During 1982 a further two sounders were caught, both of which managed to escape over the fence.

Upon realization that only a few pigs of a sounder were being caught each take, maize bait was scattered throughout the boma floor to establish a wide feeding area, preventing the pigs from moving too soon to the trip area, and tripping the gate prematurely. The height of the boma proved to be too low and should be increased to 2 metres to prevent pigs climbing out.

Conclusion

Results indicated that the boma should be moved each time it is tripped, irrespective of success, and re-established over a new feeding area. Recent experience showed that the pigs should be allowed to feed in the boma a few days before the trip is finally set. Owing to the suspicious nature of the pigs, care must be taken during subsequent baiting and setting of the gate to minimize human contact with the system.

The boma was relatively cheap compared with the fixed boma. When used correctly, the system does account for 10 to 30 pigs per season immediately prior to the commercial crop becoming attractive. The system can be made fully automatic by the inclusion of trap guns as with the fixed boma to destroy pigs once they had been caught.

Protection Fencing

The possibility of using protection fences arose accidentally during experiments with trap guns when it became obvious that bushpig refused to be guided through fences either side of the trap guns. The fence 50 cm above the ground was positioned in a large zig-zag formation with 50-metre sides forming seven large "v's" where trap guns were strategically placed. The fence was erected in July above land which was later planted to maize, effectively fencing off the hill base containing dense thickets immediately adjacent to the land. A fence wing was also placed at each side of the land for a distance of 300 metres effectively fencing it on three sides. At the bottom of the land, approximately 30 hectares in size, was a perennial stream, overgrown by dense reed beds which supported several sounders of pigs. A fence was set across the stream in a "w" formation to force the pigs through the trap guns should they move up and down the stream. The trap guns were set at the points of the "w".

During the previous year (1980/81 season) a total of 18 pigs was destroyed in the land using traditional hunting methods. Observations during this time indicated that at least 10 pigs could be heard in the lands most nights, despite control efforts against them. The expected yield of the crop was 5.5 to 6.5t/hectare, but at the time of cobbing only 1.3t/hectare were reaped due to pig depredation. The area was considered ideal for experimentation, as it supported an unusually high population of pigs and the maize was the only commercial crop within a 10-km radius. During the 1981/82 season the trap maize was planted out in late November, there being no irrigation to establish the crop before this. Due to the poor rainy season a poor crop resulted; nevertheless, pigs were attracted to the maize as expected.

A second experiment was set up on a farm near Harare, the fence being positioned across a natural vlei area approximately 400 m in length, similar to the first experiment. The aim was to catch pigs moving up and down the vlei, to crops planted in the lands further downstream.

A third experiment was set up across a stream between two rocky hillocks to stop pig movement upstream on a separate farm. This fence was set in a straight line, unlike the previous two fences.

In all cases the fences were constructed from 7 strands of 13-gauge high-tensile steel wire set in standards at 10-cm intervals.. Two metre "w" standards were cut in half and set at 15-m intervals. These were drilled to thread the wire through for added strength. Three droppers were tied in between each standard to further support the fence. Modifications were made to all three sites when it became obvious that the fences were not pig-proof. Improvements included placing diamond mesh cut to 500-mm height, plastic sheeting (gauge 900) or fertilizer bags tied to the fence.

Results

In the first experiment one pig was killed instantly when it passed through a trap gun after being disturbed in the land. A second pig went through the gun but it failed to detonate. A scaly antbear went through and was killed. No pigs attempted to go through the fenced system in the second experiment.

Results were poor from the point of view of channelling pigs through the trap guns. However, they were positive as a repellent to keep pigs out on all three occasions.

Conclusions

No pigs attempted to cross the diamond mesh or plastic sheeting, indicating that it was a deterrent to pigs. Three strands of fence was considered adequate as it could support the plastic at a cost of

Z$410/km if steel poles and droppers were used, or cheaper at Z$220 if local bush poles were used. In 1984/85 season the method was successfully employed to prevent pig depredation to seed maize on Mazoe Valley Citrus Estates. The system proved effective and is recommended.

Development of Trap Guns

Prior to 1980, trap guns were widely used in the control of bushpig and several designs were successfully employed. Most of the systems used were variations of the same principle, consisting of a standard 20-mm tubing screwed into a standard 20-mm galvanized socket housing a firing pin. The trigger assembly was operated by a spring on a break-back rodent trap connected to a trip wire. The system was tripped using a long wire placed approximately 30 cm above the ground for approximately 50m in length supported at close intervals on poles. The weapon shot horizontally and, depending upon setting, hit the animal in the shoulder region. Success of this method was erratic, depending upon the ability of the farmer to correctly set the weapon and knowledge of the bushpig's habits. Successful farmers using this method accounted for up to 14 pigs a year. The method, however, was a security hazard, frequently maiming people and consequently banned by the police.

The potential of the method was realized and modifications were made to the system to ensure that it was more selective to pigs and relatively safe to use.

Circumstances dictated that for improved security the trap gun should shoot downwards and not horizontally as in the banned method. The initial structure was designed in a frame from square and round tubing of 25-mm diameter measuring 500 mm x 1200 mm in height (Figure 3). The frame was set between two standards driven into the ground to give support. The barrel unit was constructed from a 20-mm tube set in a frame on a cross member 1 m above the ground. The trigger system underwent several modifications to improve safety and reliability. The system finally adopted was a drop bar system constructed from 2 x 300-mm length of 25 mm x 25 mm x 4-mm angle iron to form a square bar. The drop bar was hinged at one end near the one side of the frame and the other side held up over the firing pin by a sear welded directly on the swivelling loose pipe. The drop bar was set between two sets of flat bars welded to the cross member to prevent it falling either side of the firing pin. Detonation of the system was positive, the push bar having to move 30 degrees to either side before the sear would travel sufficiently to disengage the drop bar. Further modification was made to the system when it became obvious that the pigs were reluctant to pass through the frame, possibly being put off by the smell and narrow entrance. The frame was cut in half removing the loose tube and push bar system at the bottom. The top portion was supported by wooden poles or between two trees situated in close proximity to each other. The falling bar was left intact; however, the sear assembly was changed to pull back from the end of the drop bar from a hinged assembly instead (Figure 4). String was used to connect the hinged sear system via the side support across the pigs' path 30 cm above ground, between the two upright supports forming a trip across the entrance mouth. The string was kept loose to allow sufficient slack for the pig to position itself correctly beneath the barrel for a humane shot. Where the gun was set up over bait, the string was placed within the bait.

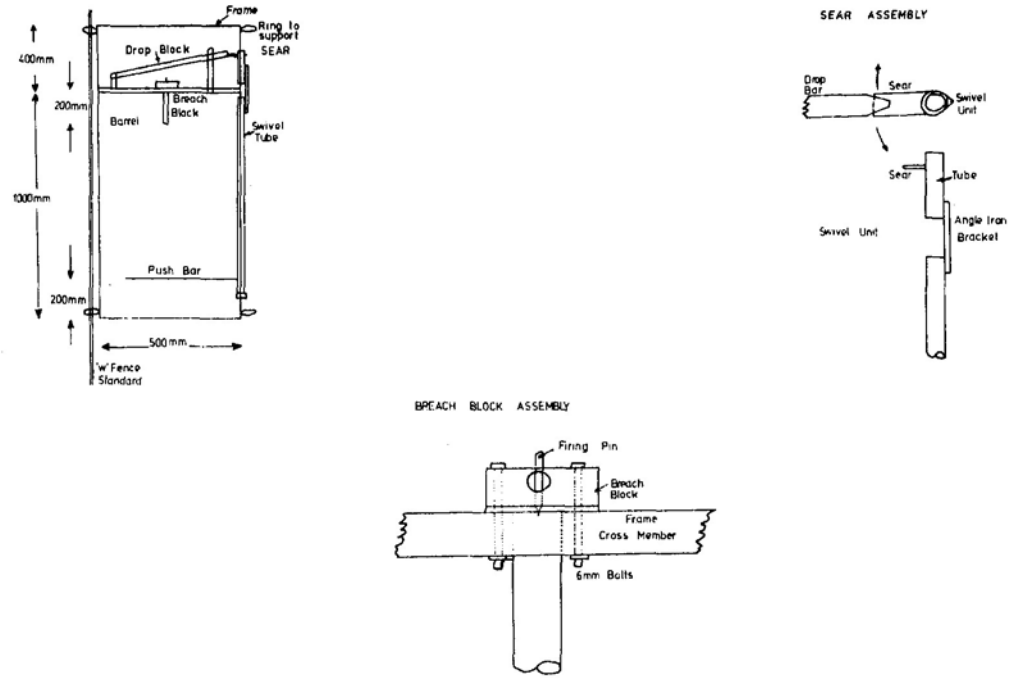

Figure 3. The frame design for a trap gun.

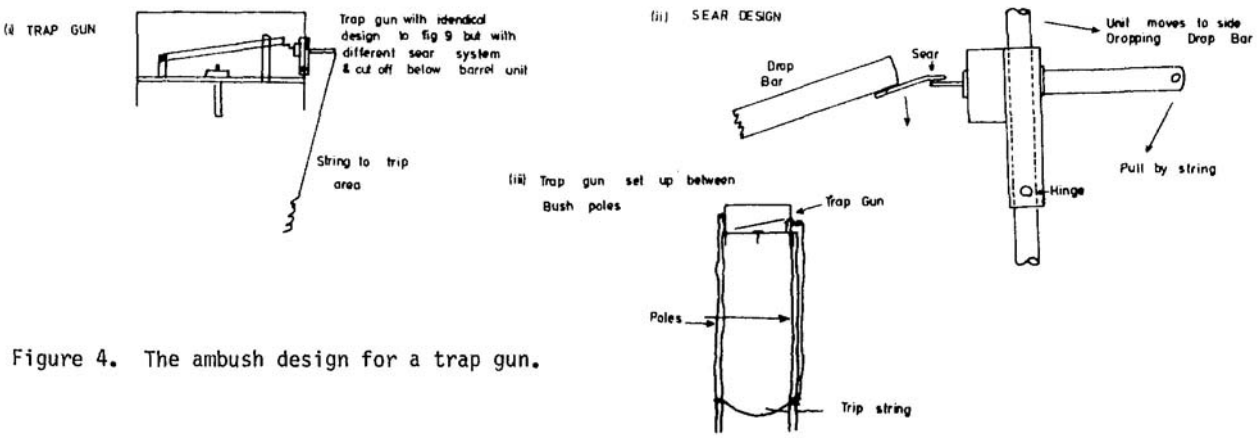

Figure 4. The ambush design for a trap gun.

Experiments began on a land of maize in the Eastern Highlands of Zimbabwe where there were large concentrations of bushpig which approached each night to the lands along well-defined paths. A total of 12 trap guns was made and placed in ambush positions across the paths. Guns were set both in open grassland and in thick undergrowth outside the crop to test preferences. A further three guns were placed across paths within the crop.

The guns were initially painted but later steps were made to remove the paint when it was discovered that the pigs avoided them. Various camouflage techniques were tried including covering the gun with sacking soaked in pig dung and fermented maize.

Later experiments were arranged to fence off control zones to guide the pigs through (mentioned above). Attempts were also made to fence off wet areas where fresh pig sign was evident and guns placed strategically at exit points.

More recent modifications to both systems led to experimenting with trap guns suspended over bait. These trap guns were operated by a battery activating a solinoid system from a trip switch buried in the bait. The trip arrangement was selective in that it required rooting about in the bait before the system triggered. Animals feeding on the surface were unable to detonate the system. The trap was built with adjustment to shoot in the centre of the baited site ensuring a humane kill on the rooting animal. The advantage of this system was that no objects other than the maize was in view to the approaching pig which helped to overcome the problem of trap shyness. Later experimentation showed that the electrical system was unreliable. In addition, the single barrel unit often missed the pigs. Modifications were then undertaken to improve killing ability by placing five barrels together, displayed outwards to enlarge the killing zone, and the unit was called a "sounder eliminator" (Figure 5). The five barrels were screwed into sockets welded into a short length of 45-mm boiler tube 4 mm in thickness. Detonation was achieved using the same drop bar system as the gate trap gun, using a blank 12-gauge cartridge. The blast from the "blank" pressurized the tube, detonating the five cartridges beneath simultaneously.

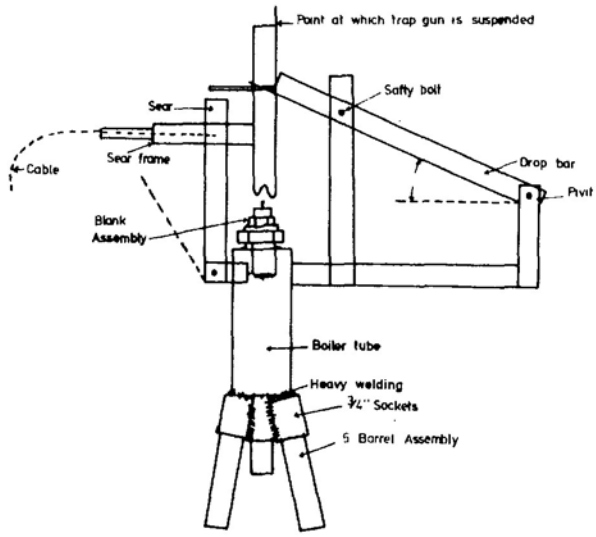

Figure 5. Sounder eliminator.

The system was triggered by a cable arrangement in a plastic tube set in a gentle arc from the gun to the trip system buried beneath the bait which pulled the sear from beneath the drop bar. The cable was pulled by the action of the pigs rooting in the bait below the ground lifting the trip wire (Figure 6).

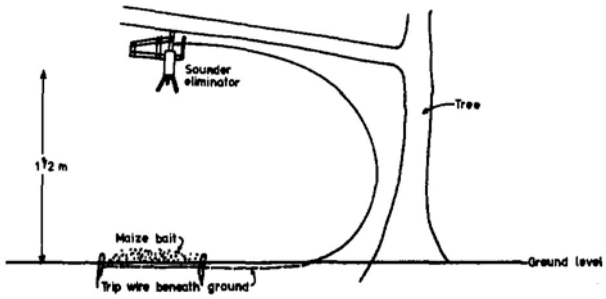

Figure 6. Setting up of sounder eliminator.

Bushpigs were initially attracted to the spot using fermented maize in a similar manner to the portable boma system, before setting the trap gun.

The cost of building the trap gun if built at home was approximately Z$35.00. If manufactured by a commercial firm the cost would be considerably higher at an estimated Z$100 to 120 per gun. The sounder eliminator was a more sophisticated weapon and discussions with the Zimbabwe Republic Police indicated that they would prefer the gun to be made commercially by one manufacturer who would then be responsible for commodity control.

Results

From a security point of view all the systems were found to be acceptable. The frame design required a positive push on the push bar through 30 degrees from the central position for detonation to take place. As the barrel assembly is set only 80 cm above ground it was unlikely that a person would pass through accidentally. The system was considered safe to set as it was impossible for the bar to drop on the firing pin with the push bar near the centre position. The sounder eliminator had an added advantage in this regard as the trip system was totally buried under the ground where a deliberate rooting action was required to set it off. All the trap guns were selective to those species which tended to burrow beneath vegetation rather than step over it. On five occasions bushbuck and duiker passed through the frame system without touching the push bar. A total of seven bushpig were killed using this system over the experimental period. An antbear and a porcupine were also killed, both of which burrow rather than step over things.

Ambushing bushpigs with the frame system proved to be a failure. Apart from the seven pigs killed, pigs approached the system on 45 other occasions but turned back immediately in front of the trap gun. It was evident that the pigs were suspicious of the system, probably repelled by the smell of either the gun or human activity around it. It was evident that the trap gun in some way represented a change in the environment which the pigs then avoided. Various attempts to camouflage the system were also unsuccessful. Even when bait was used to attract the pig through the gate they refushed to enter.

Observations indicated that when the pigs initially avoided the trap they made a second path around, which they continued to use thereafter, effectively avoiding the trap each night. Only when they reused the path after temporarily not using it, provided the trap gun was left unattended, did they revert to the original path passing through the trap.

The ambush version attempted to overcome this problem and has resulted in the death of one pig. However, it would appear that the pigs are still suspicious, possibly when they detect human presence on and around the gun.

The sounder eliminator showed the most promising results, where a total of 25 pigs detonated the system although only four were killed due to problems of shot distribution rather than malfunction on the part of the gun. The system had an added advantage in that the bushpigs were attracted beforehand with fermented maize and therefore were not suspicious of human smell. There was no evidence of the pigs becoming suspicious of the system, and on several occasions they returned to feed on the bait the evening following detonation. The unit was considered safe and no accidental discharges took place during trials. The problem of poor shot replacement was improved by setting the trip wire 45 degrees from the central plane of the trap gun above so that a feeding pig at right angles to the wire receives pellets in the head from the centre barrel and pellets in the shoulder and back from one of the corner barrels (Figure 7). The centre barrel was also cut back to 50 mm to improve shot spread.

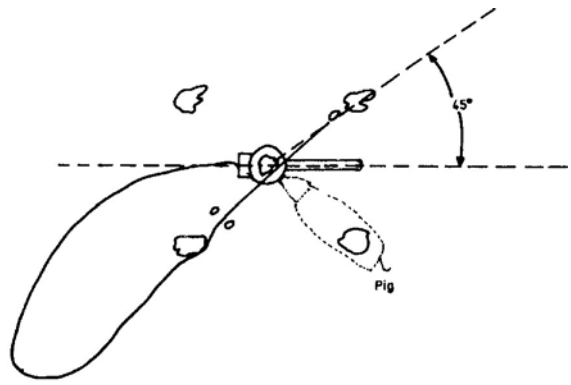

Figure 7. Adjustment of sounder eliminator.

In theory, the sounder eliminator should be capable of destroying several pigs at once, though this did not occur during trials.

Conclusion

Indications are that the Firearms Department of C.I.D. Zimbabwe Republic Police are sympathetic to its introduction, but the guns will be classified as weapons in terms of the Firearms Act and their construction therefore controlled.

Results indicate that the frame trap guns have some application; however, there are major problems of acceptance by the pigs. The trap is considered safe enough to be left loaded with little harm to humans or other forms of wildlife for several days at a stretch to improve on the chances of success. The frame design is possibly best suited to destroying the pigs in the bomas and, in conjunction with protection fences, should pigs persist in breaking through.

The ambush version can be used to ambush along well-used paths although its acceptance still needs further investigation. It can also be placed over feeding sites where the string trigger assembly is placed within the food in a similar role to the sounder eliminator.

The sounder eliminator was the most successful from the acceptance point of view. Though they are more complex to construct, they have several advantages. The system is specific to pigs and there is no possible way of detonating the system accidentally by walking over the bait area. The system is capable of killing 2 to 3 pigs during detonation if set correctly.

Manufacture of Conventional Shotgun to Improve Spread and Placement

The methods discussed have been aimed at controlling the bushpig before the commercial crop matures or protecting it when it becomes vulnerable. A system was also required to deal with pigs feeding in the land once the crop had matured. Hunting at night has been the method most frequently employed by commercial farmers with varying degrees of success, depending mainly upon individual ability. Based on the questionnaire, most of the farmers considered night hunting using crop guards to be a deterrent but not effective in the long term. The main problems were establishing the exact location of feeding pigs in the maize and aiming the weapon accurately to ensure the correct bullet placement.

The first problem is dependent largely upon the hunter's experience and knowledge of the animal and its habits, and the second could be partly overcome by providing a sight aid to aim the weapon and so improve upon shot placement.

Experimentation was undertaken using a conventional single-barrel shotgun commonly used by crop guards considered to be the most successful.

A brief survey of hunting by night indicated that it was relatively easy to approach feeding bushpig downwind within 10 m. Bullet spread at this range with conventional single-barrel shotgun is less than 200 mm from a full-choke barrel. The barrel length of the test weapon, a greener 12 bore, was 800 mm. This was reduced to 550 mm to provide an even spread of 400 to 500 mm at 10 metres, thus improving the chances of hitting the pig. (Figure 8).

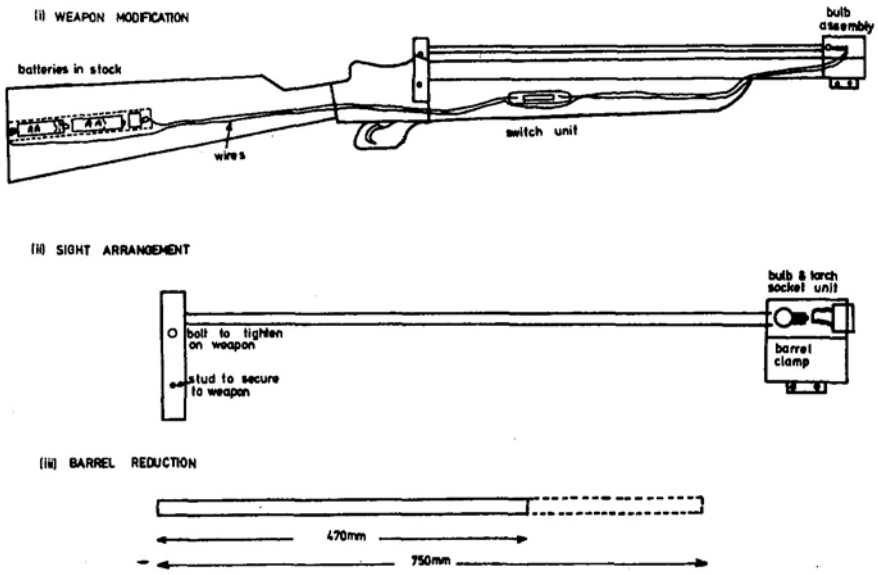

Figure 8. Modification of standard shotgun for night hunting.

A small tube of 10-mn diameter was mounted on the barrel with a small torch bulb fitted into a socket welded in front so that it would shine down the tube. The battery unit was fitted into the stock of the weapon using two standard AA batteries placing them in the hole in the butt which houses the bolt holding the butt to the weapon. The wires were placed along the butt to the stock passing through a switch situated on the forearm stock. The end of the tube was mounted on the barrel at its front and the rear end left floating to sight in the weapon before securing it in position.

Aiming was achieved by switching on the unit, placing one's head against the butt, peering down the tube until the bulk filament could be seen in the centre. Using both eyes the light was then pointed at a target and the weapon discharged. With a little practice sighting was relatively easy and the unit adjusted until the pellets consistently struck around the position the light pointed at. The weapon was then tested with 10 consecutive shots to check bullet placement and did not vary. The weapon was tried on two occasions.

Results

Results were encouraging. Two shots were fired and although initially it was presumed that the pigs had been missed, three pigs were found later in the grass nearby.

Conclusion

Although field results were insufficient to be convincing, the method showed a definite improvement to blind shooting at night, both at stationary and moving objects dragged across the hunter's path under test.

STRATEGY TO REDUCE WILD PIG DEPREDATION TO MAIZE CROPS

Of the various ideas experimented with, six systems are recommended at present. All six have shown potential in the field and can readily be made up by individual farmers with equipped workshops.

The methods recommended are: traditional hunting methods, portable bomas, protection fences and/or locally available repellents such as old engine oil or creosote, trap guns, sight aid to shotguns for night hunting, and land hygiene.

None of the systems replace each other as they are all complementary in the sense that they deal with the bushpig in different areas simultaneously or at different times of the year.

Based upon research elsewhere in the world, including the United States and Australia, long-term crop protection has not been achieved merely by killing animals. Observations indicate that populations are probably maintained with minor fluctuation from season to season depending upon rainfall. It is possible that drought conditions are the main environmental agent reducing bushpig numbers from time to time and not predators as previously thought. Hunting is believed to have little significant impact. There are several considerations which must be taken into account before determining strategy on individual farms. These vary according to land size, terrain of farm, rainfall per annum, type of season being experienced, number of pigs involved and the degree of control desired. Where heavy rains are expected, a programme combining eradication and protection would best be adopted.

To reduce numbers the methods outlined are least effective during crop depredation. The fixed boma is too reliant upon early rains to be reliable and the frame trap guns are of doubtful value. Experience has shown that pigs are not attracted to bait at this time. The reduction of numbers then is only effective during the dry season immediately before the onset of rains and the planting of the commercial crop. The pigs are concentrated at this time due to shortages of food and take bait readily. Control by sounder eliminator or portable boma are the best methods to reduce numbers. With the restriction on the manufacture of the sounder eliminator of the two we recommend the portable boma.

Control thereafter when the pigs commence feeding on the crop is effectively achieved by protecting the crop using the protected fence and/or repellents in the form of burning tyres around the lands or soaked sacking in creosote placed in 500-ml oil tins at 10-metre intervals tied to individual maize plants. General crop hygiene is paramount; weeds should be removed from within the crop and the grass mowed around the outer edges to a distance of 100 metres, where possible, forcing the pigs to cross in the open in order to gain access to the crop. Where depredation levels are unacceptable, crop guards should be employed using the modified shotgun to improve access. Guards with tracking ability are best deployed the following day tracking the pigs to their lie-up spots where they can be shot.

Summary of Strategy

The strategy recommended, therefore, is to protect the land during the growing season, only resorting to hunting when levels of depredation are unacceptable. During the dry season all the known wet areas or seeps indicating pig activity should be baited and a portable boma systematically used to reduce the population before the commercial crop is grown.

FUTURE RESEARCH PROGRAMME

Several ideas are still being experimented with:

Experiments using repellents such as the product HATE, developed in West Germany, which has been reported to be successful against elephant and bushpig in South Africa.

The possibility of using game nets set up downwind of resting places into which the pigs can be driven, caught, and destroyed. This method may also have application in the land at night. Initial experimentation has proved disappointing with success only being achieved on undisturbed populations as in National Parks and Wild Life Estates.

Use of the poison sodium monflouracetate (Compound 1080) in the eradication of pigs where unusual build-ups have occurred. The system has been successful against feral pigs in Australia (Hone 1980). The chemical is highly toxic to all animals and if adopted will only be administered by professional staff in the Department.

Further details of the mechanical methods mentioned with full details on the construction of the six methods can be obtained from Handbook No. 5, published by the Zimbabwean Agricultural Journal, P. O. Box 8108, Causeway, Zimbabwe.

ACKNOWLEDGMENTS

The Problem Animal Research and Control Unit, P.A.R.C.U. wishes to thank the following, without whose help the research programme would not have been possible: The Commercial Grain Producers' Association who provided $Z7,000.00 for the research programme, and individual farmers who assisted directly by making their farms available for the construction bomas and other experiments; Mr. Darrol Plowes for the provision of fencing for the erection of two bomas; and ecologists and colleagues in the Department, including Principal Ecologist Dr. Dave Cumming, Ecologists Jones and Grobler and Warden de Beer, who assisted with ideas during experimentation. Acknowledgments also go to Dr. Cumming, Dr. Jarvis, Senior Ranger Johnson and Richard Wingfield, who offered constructive criticism on the paper.

LITERATURE CITED

DORST, J., and P. DANDELOT. 1970. A field guide to larger mammals of Africa. Collins, London.

GROBLER, J. 1973. A preliminary report on the bushpig problem animal in Rhodesia. Department of Natural Resources, Harare, Zimbabwe.

HONE, J. 1980. Feral pigs and their control. Division of Animal Production Bulletin, A4.1.1 Department of Agriculture, New South Wales, Australia.

JONES, M. A. 1978. Some aspects of bushpig feeding ecology in the Rhodes Matopos National Park, Certificate of Field Ecology Thesis, University of Zimbabwe.

KENMUIR, J. D., and R. WILLIAMS. 1975. Wild Mammals. Longman, Zimbabwe.

SKINNER, J. D., G. I. BREYTENBACK, and C. I. A. MABERLY. 1976. Potomocheorus porcus in Northern Transvaal. South African Journal of Wildlife Research 6(2): 123-128.

SMITHERS, R. 1966. The mammals of Rhodesia, Zambia and Malawi. Collins, London.