University of Nebraska - Lincoln
DigitalCommons@University of Nebraska - Lincoln

Other Publications in Wildlife Management | Wildlife Damage Management, Internet Center for

3-1-2005

Evaluation of attractants for live-trapping nine-banded armadillos

Daniel J. Gammons
University of Georgia, Athens, Georgia

Michael T. Mengak
University of Georgia, Athens, Georgia

L. Mike Conner
Joseph W. Jones Ecological Research Center, Newton, Georgia

Follow this and additional works at: http://digitalcommons.unl.edu/icwdmother

Part of the Environmental Sciences Commons

Gammons, Daniel J.; Mengak, Michael T.; and Conner, L. Mike, "Evaluation of attractants for live-trapping nine-banded armadillos" (2005). *Other Publications in Wildlife Management.* Paper 43.
http://digitalcommons.unl.edu/icwdmother/43

This Article is brought to you for free and open access by the Wildlife Damage Management, Internet Center for at DigitalCommons@University of Nebraska - Lincoln. It has been accepted for inclusion in Other Publications in Wildlife Management by an authorized administrator of DigitalCommons@University of Nebraska - Lincoln.

Evaluation of attractants for live-trapping nine-banded armadillos

Daniel J. Gammons[1], Michael T. Mengak[1], and L. Mike Conner[2]

[1] Graduate Student and Associate Professor - Wildlife Specialist, respectively, D. B. Warnell School of Forest Resources, University of Georgia, Athens, Georgia 30602
[2] Wildlife Ecologist - Joseph W. Jones Ecological Research Center, Newton, Georgia

WSFR - Wildlife Management Series No. 4 **March 2005**

Introduction

In the past 50 years, the range of the nine-banded armadillo (*Dasypus novemcinctus)* in the south has been rapidly expanding. As their range expands, armadillos increasingly come into conflict with suburban landowners. When foraging, armadillos often uproot ornamental plants. Their rooting also destroys gardens, lawns, and flower beds. Their burrowing can damage tree roots and building foundations. Most armadillo damage is a result of their feeding habits. Armadillos dig shallow holes, 1-3 inches deep and 3-5 inches long, as they search for soil invertebrates.

A recent survey of Georgia county extension agents by scientists at the University of Georgia found that 77.6% of all agents reported receiving complaints or requests for information on armadillos. Armadillo related inquiries made up 10.1 % all inquiries for all agents across the state, surpassing even the white-tail deer (*Odocoileus virginianus*).

Armadillos are often assumed to destroy nests of ground-nesting birds. Armadillo diets have been studied in several states including Alabama, Louisiana, Texas, Georgia, Arkansas, and Florida. According to these studies, vertebrate matter, especially bird eggs, made up an minor portion of their diet. The armadillo's diet often consists of more than 90% insects, grubs and earthworms. Based on these studies, it seems that claims of armadillos being significant nest predators are unfounded.

However, some authors have warned that armadillos merely break eggs open and lick out the contents. When this happens, little evidence remains in their stomachs, making detection of egg predation using stomach content analysis almost impossible. Using miniature video-surveillance cameras to monitor quail nests, at least one study at Tall Timbers Research Station in Florida has documented this behavior in wild armadillos. This study found that armadillos may be more significant quail predators than previously accepted. Armadillos were responsible for destroying up to 26% of all quail nests.

Armadillos are not protected under Georgia wildlife regulations (DNR website www.georgiawildlife.com). They may be hunted or trapped year round without limit. Removal by shooting can be an effective control method. However, this may not be a safe or desirable option for the suburban landowner. In many cases, suburban landowners would rather have animals trapped and relocated. Other control methods are available, such as habitat modification and exclusion, but these methods are often impractical over a large area, expensive, or ineffective. Our objective was to test several different lures or baits for live-trapping nine-banded armadillos. We used cage traps hoping they could be a practical alternative to lethal removal for suburban landowners.

Methods

We trapped armadillos, using 10 x 12 x 32 inch Tomahawk wire cage traps, from April to July 2004 at the Joseph W. Jones Ecological Research Center in Newton, Georgia. Traps were placed in areas with abundant armadillo sign. Since we were primarily interested in evaluating the attractants we avoided placing traps directly over burrows, where armadillos may be forced into traps. We tested the effectiveness of several baits and lures, including:

- Live night crawlers
- Rotten chicken feed
- Rotten eggs
- Marshmallows
- Vanilla wafers
- "Armor plate" a commercially available lure
- Live crickets
- Whole eggs
- Bananas
- Sardines
- Moistened soil

In addition, we tested two types of unbaited traps: (1) an unbaited trap with "wings" consisting of two 2-inch x 6-inch boards and 6 feet long attached at one end of the trap to funnel the armadillo into the trap (Figure 1), and (2) an unbaited trap without wings.

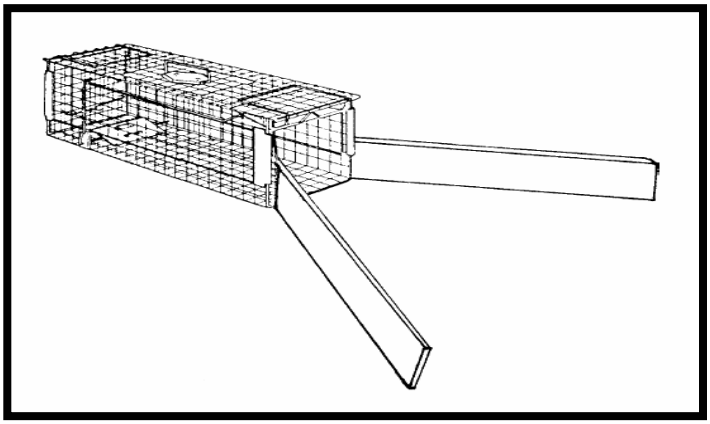

Figure 1. Diagram of the unbaited trap with wings used to capture nine-banded armadillos in South Georgia, summer 2004. Wings were constructed of pressure-treated lumber (2" x 6" x 6').

Results

In trapping studies, scientists compare data by calculating a index called trap-nights. One trap night equals 1 trap set for one night. Ten trap nights equals 1 trap set for ten nights or ten traps set for one night.

In our study, we had 1,332 trap nights. We captured only 10 armadillos or an average of one armadillo every 132 trap nights. This number is quite low. Of the 11 attractants we evaluated, most of them (nightcrawlers, chicken feed, whole eggs, bananas, marshmallows, sardines, and vanilla wafers) had 0 captures. Table 1 shows the results of the 4 remaining attractants. Capture success was too low for any meaningful statistical comparisons of attractants. However, when all baited traps (63% of trap-nights) were compared with the unbaited traps (37% of trap-nights), there was no significant difference in capture success (Figure 2). Only four armadillos were captured in traps with baits or lures. Six armadillo were captured in unbaited traps. Of these six, four were caught in unbaited traps with wings.

Discussion

Given that capture success was quite low, it is unlikely that trapping is an effective method of quickly reducing local armadillo populations. Until an effective attractant can be found, lethal removal by shooting remains the most effective solution. If live-trapping and relocation are chosen as control measures, however, the use of any of the attractants tested is unnecessary. Armadillos in this study were just as likely to enter a baited trap as an unbaited trap. It is likely that the armadillos we did capture randomly walked into the traps and were not necessarily attracted.

Table 1. Trap nights, number of captures, and capture success for attractants used to attract armadillos to traps in South Georgia, summer 2004.

Attractant	Trap Nights	Number of Captures	Captures per 100 trap nights
Crickets	94	1	1.06
Rotten eggs	52	1	1.92
Moistened soil	44	1	2.27
“Armor Plate” lure	102	1	0.98
Total of 7 other attractants	1040	0	0.00

This suggests that if armadillos are to be captured, trap placement is much more important that attractant selection. Homeowners and others attempting to live trap armadillos should carefully select a trapping location. It is likely that a trap (even one without bait) with wings placed near an active burrow will be the most effective method for capturing individual nuisance animals. Homeowners and others can place traps near natural barriers or fences such as the wall of patios, edge of buildings, or landscaping features; or near natural fences such as fallen trees. The use of baits and attractants does not appear to increase trap success.

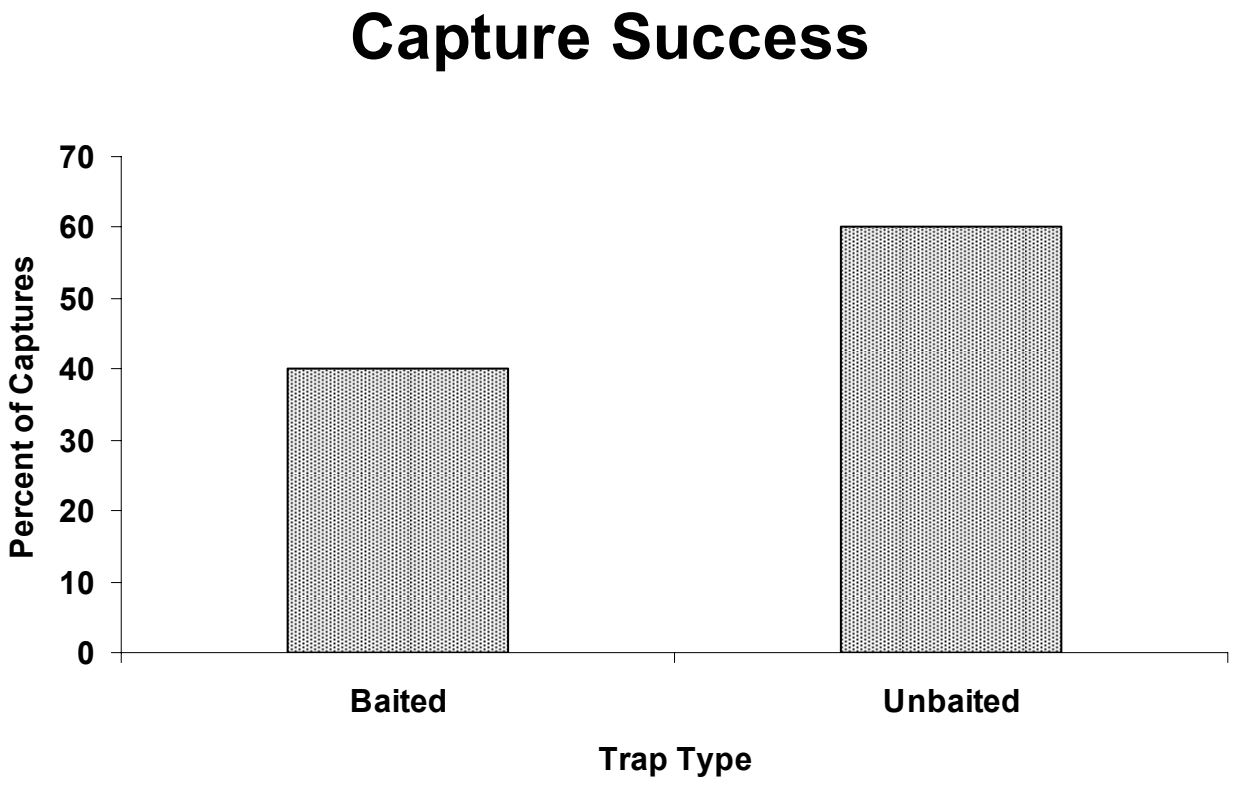

Acknowledgements
This study was supported by a Graduate Fellowship from the Berryman Institute – East at Mississippi State University and the J. W. Jones Ecological Research Center.

UNIVERSITY OF GEORGIA WARNELL SCHOOL OF FOREST RESOURCES PUBLICATION – **WSFR -WMS 05 – 04**

THE UNIVERSITY OF GEORGIA AND FT. VALLEY STATE UNIVERSITY, THE UNITED STATES DEPARTMENT OF AGRICULTURE AND THE COUNTIES OF THE STATE COOPERATING.
THE COOPERATIVE EXTENSION SERVICE OFFERS EDUCATIONAL PROGRAMS, ASSISTANCE AND MATERIALS TO ALL PEOPLE WITHOUT REGARD TO RACE, COLOR, NATIONAL ORIGIN, AGE, SEX OR DISABILITY.
A UNIT OF THE UNIVERSITY SYSTEM OF GEORGIA.
AN EQUAL OPPORTUNITY/AFFIRMATIVE ACTION ORGANIZATION COMMITTED TO A DIVERSE WORK FORCE.