University of Nebraska - Lincoln
DigitalCommons@University of Nebraska - Lincoln

NASA Publications | National Aeronautics and Space Administration

1-1-2011

Small Cold Temperature Instrument Packages

Pamela E. Clark
NASA/GSFC, Greenbelt, MD, Pamela.E.Clark@NASA.gov

P. S. Millar
NASA/GSFC, Greenbelt, MD

P. S. Yeh
NASA/GSFC, Greenbelt, MD

S. Feng
NASA/GSFC, Greenbelt, MD

D. Brigham
NASA/GSFC, Greenbelt, MD

See next page for additional authors

Follow this and additional works at: http://digitalcommons.unl.edu/nasapub

Part of the Physical Sciences and Mathematics Commons

Clark, Pamela E.; Millar, P. S.; Yeh, P. S.; Feng, S.; Brigham, D.; and Beaman, B., "Small Cold Temperature Instrument Packages" (2011). *NASA Publications.* Paper 47.
http://digitalcommons.unl.edu/nasapub/47

This Article is brought to you for free and open access by the National Aeronautics and Space Administration at DigitalCommons@University of Nebraska - Lincoln. It has been accepted for inclusion in NASA Publications by an authorized administrator of DigitalCommons@University of Nebraska - Lincoln.

Authors
Pamela E. Clark, P. S. Millar, P. S. Yeh, S. Feng, D. Brigham, and B. Beaman

This article is available at DigitalCommons@University of Nebraska - Lincoln: http://digitalcommons.unl.edu/nasapub/47

Available online at www.sciencedirect.com

SciVerse ScienceDirect

Physics Procedia 20 (2011) 300–307

Physics Procedia

Space, Propulsion & Energy Sciences International Forum - 2011

Small Cold Temperature Instrument Packages

P. E. Clark[a], P. S. Millar, P. S. Yeh, S. Feng, D. Brigham, B. Beaman

NASA/GSFC, Greenbelt, MD

Abstract

We are developing a small cold temperature instrument package concept that integrates a cold temperature power system with ultra low temperature ultra low power electronics components and power supplies now under development into a 'cold temperature surface operational' version of a planetary surface instrument package. We are already in the process of developing a lower power lower temperature version for an instrument of mutual interest to SMD and ESMD to support the search for volatiles (the mass spectrometer VAPoR, Volatile Analysis by Pyrolysis of Regolith) both as a stand alone instrument and as part of an environmental monitoring package. We build on our previous work to develop strategies for incorporating Ultra Low Temperature/Ultra Low Power (ULT/ULP) electronics, lower voltage power supplies, as well as innovative thermal design concepts for instrument packages. Cryotesting has indicated that our small Si RHBD CMOS chips can deliver >80% of room temperature performance at 40K (nominal minimum lunar surface temperature). We leverage collaborations, past and current, with the JPL battery development program to increase power system efficiency in extreme environments. We harness advances in MOSFET technology that provide lower voltage thresholds for power switching circuits incorporated into our low voltage power supply concept. Conventional power conversion has a lower efficiency. Our low power circuit concept based on 'synchronous rectification' could produce stable voltages as low as 0.6V with 85% efficiency. Our distributed micro-battery-based power supply concept incorporates cold temperature power supplies operating with a 4V or 8V battery. This work will allow us to provide guidelines for applying the low temperature, low power system approaches generically to the widest range of surface instruments.

© 2011 Published by Elsevier B.V. Selection and/or peer-review under responsibility of Institute for Advanced studies in Space, Propulsion and Energy Sciences

PACS: 00; 7.87

Keywords: Space Instruments; Mechanical; Thermal; Electronic Design; Power System; Surface Measurements

1. Introduction

* Corresponding author. Tel.: +1-301–286–7457; fax: +0-000-000-0000 .
E-mail address: Pamela.E.Clark@NASA.gov.

1875-3892 © 2011 Published by Elsevier B.V. Selection and/or peer-review under responsibility of Institute for Advanced studies in Space, Propulsion and Energy Sciences
doi:10.1016/j.phpro.2011.08.027

This article is a U.S. government work, and is not subject to copyright in the United States.

The development of capability for sustainable robotic or human surface exploration for a variety of solar system targets, thereby meeting the current goals and objectives of NASA Science and Exploration Systems Directorates, will require the deployment of science packages, analogous to the ALSEP (Apollo Lunar Science Experiment Package) [1] (Figures 1 and 2) capable of long–term operation. Chief instruments/instrument package candidates include those which could provide measurements of a) the atmosphere, radiation, field, charged particle, and dust interactions on local and global scales, b) the interior composition and structure, and c) measurement and capture of surface and subsurface compositions, including volatiles. Typically, such packages must be capable of surviving ultra cold (during extended dark periods), prolonged exposure to space radiation, and extreme variations in thermal conditions, as well as operating autonomously with stand-alone power systems whether delivered robotically or by a human crew. From the time of the Apollo era, radioisotope (Pu238) based power systems have met the need to supply both power and heat in the coldest and darkest environments like those experienced periodically on the lunar surface, but the availability of radioisotope based power systems over the next decade at least is now highly uncertain. In fact, our preliminary study demonstrated that when conventional approaches are used in designing instrument packages, performance suffers and mass and cost parameters grow significantly as a result of increased thermal protection and battery power requirements necessary to withstand lunar environmental conditions within needed operational constraints. The efforts described in detail here demonstrate the need , current and projected capability for systems that can operate adequately even at the temperatures of volatile cold traps (40K), meeting or reducing the power and mass constraints of Apollo era packages without requiring the use of Pu238.

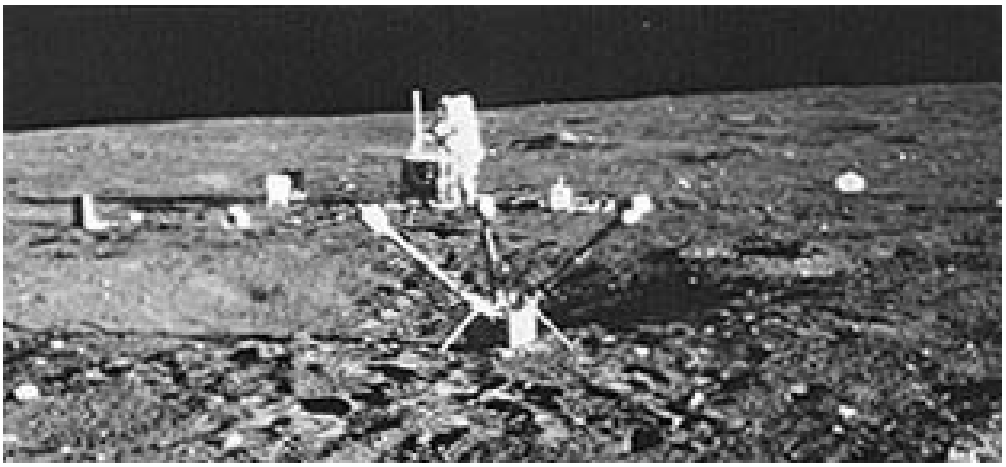

Figure 1. ALSEP (Apollo Lunar Science Experiment Package) instruments deployed on the lunar surface. Note Magnetometer in foreground and astronaut by the CC&DH package behind it.

2. Design Approaches and Methodology

We are in the process of developing a small cold temperature power system concept to be integrated along with ultra low temperature ultra low power electronics components and power supplies into a ‘cold temperature surface operational’ demo version of VaPoR Volatile Analysis by Pyrolysis of Regolith), a surface environment volatile detection system under development, both as a stand alone instruments and as part of a multi–instrument package. VAPoR, a mass spectrometer, supports volatile detection, surface composition determination, and environmental monitoring, now of great interest for robotic precursor missions ‘following the water’ or looking for in situ resources. We have also proposed to develop such a demo for an astrophysical observatory to study long wave radio emissions from solar and extra–solar sources, as keys to particle acceleration based processes.

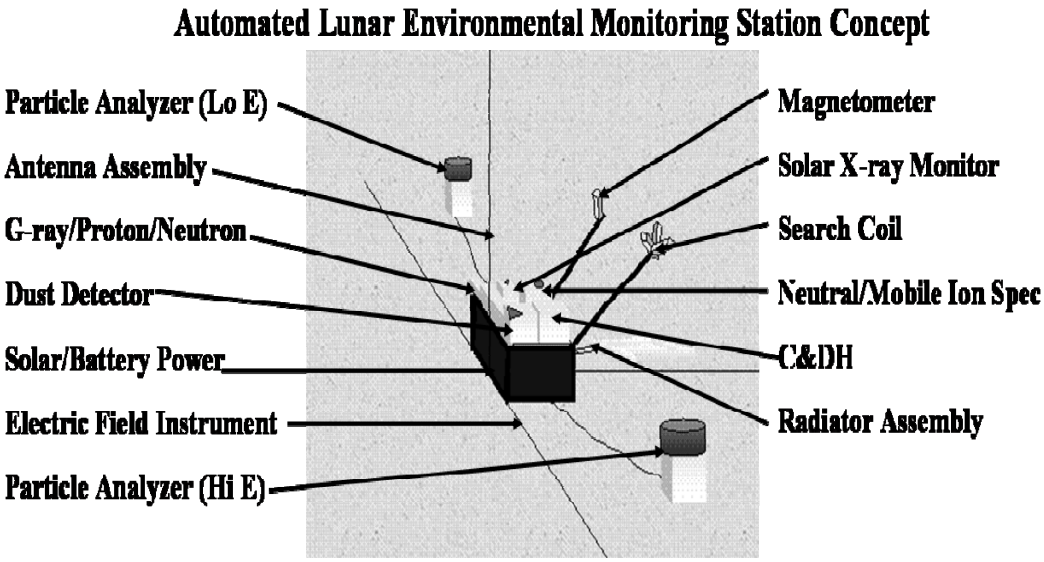

Figure 2. Concept of Lunar Environmental Monitoring Station, analogous to ALSEP, deployed on lunar surface.

Such observatories include ROLSS (Radio Observatory for Lunar Sortie Science) and DALI (Dark Ages Lunar Interferometer). We are building on our previous work to develop strategies for incorporating Ultra Low Temperature/Ultra Low Power (ULT/ULP) digital and analog electronics, and lower voltage power supplies, as well as innovative thermal design concepts for instrument packages [1 – 3]. We leverage collaborations, past and current, with JPL battery development program to increase power system efficiency in extreme environments. We will also harness advances in MOSFET technology that provide the lower voltage thresholds for power switching circuits incorporated into our low voltage power supply concept. Conventional power conversion has a lower efficiency. Our low power circuit concept based on 'synchronous rectification' could produce stable voltages as low as 0.6V with 85% efficiency. Our Li Ion battery–based power supply concept incorporates cold temperature power supplies operating with a 4V or 8V battery. One of our primary goals is to provide guidelines for applying the 'low power, low temperature' system approaches generically to the widest range of surface instrument packages, leveraging capabilities to create technologies that are critically in-demand to serve any model for future space exploration.

2.1. Development of Packaging and Technology System

We have launched a multi-year effort to develop strategies and design concepts for ALSEP-like stand-alone lunar surface instrument packages with minimized mass/power requirements and without dependence on radioisotope-based batteries. An initial attempt to design (conventionally) an lunar environmental monitoring package (LEMS) with a solar/battery based power system led to a package with a unacceptably large mass (500 kg) of which over half was battery mass. Our Phase 1 work [1, 2] led to considerable reduction (5x to 100 kg) in the initial mass of such a concept deployable near the poles by incorporating a) radiation hard, cold temperature (operational to –40°C) electronics readily available but not routinely considered for deep space missions and b) innovative thermal balance strategies using highly insulating self–supporting multi-layer thin material (G10) leveraged from James Webb Space Telescope and gravity-assisted heat pipes. Now, in Phase 2 of this work [1], we are developing the Ultra Low Temperature/Ultra Low Power (ULT/ULP) technology system concept with incorporation of ULT/ULP

electronics, lower voltage power supplies, and distributed or non-conventionally packaged power systems that operate at colder temperatures.

2.2. ULT/ULP Electronics

ULT/ULP radiation hard digital components, developed at GSFC and through partnerships with the U. Idaho and the DOD National Reconnaissance Office, have successfully been demonstrated to offer orders of magnitude savings in power consumption and thermal tolerance. CULPRiT (CMOS Ultralow Power Radiation Tolerant) technology has successfully flown on NASA's ST5 90 day mission. Similar high end channel coder and compression chips have been requested for use in MMS, and GOES-R missions. We are currently leveraging DARPA funding to our partner at U. Idaho's CAMBR for the development of ULT/ULP electronics, as well as RHBD (Radiation Hardened by Design) technology which provides protection for the electronics against radiation damage [3]. The 0.35μ CMOS RHBD ULP electronics was demonstrated in NASA's ST-5 mission for a chip operating at 0.5 volt logic in space and achieved 100:1 power reduction as compared to its 5 volt part in space. The ULP chip was also tested at cryogenic temperature of near 20K and demonstrated full functionality.

2.3. Low Voltage Power Supplies and Colder Temperature Batteries

Our work will support development of small batteries and power supplies operating efficiently over many diurnal cycles at lower voltages and colder temperatures (down to a minimum of –50°C, with a goal of –80°C). Building on ST–5 technology, our distributed micro-battery-based power supply concept incorporates cold temperature power supplies operating with a 4V or 8V battery. Improvements in operation of Li–based battery systems [4] below –40°C have already been demonstrated in rechargeable Li–ion systems (with low temperature organic electrolyte systems to enhance conductivity and charge transfer (Lithion, SAFT)), as well as lower TRL Li–S and Li–$CuCl_2$ systems [5]. To support the proposed instruments we are testing some low temperature battery systems for capability (capacity, power density, and recharge) and efficiency of operation below –40°C using available Li–Ion systems at appropriate rates of charge/discharge. Advances in MOSFET technology provide the lower voltage thresholds for power switching circuits incorporated into our low voltage power supply concept. Conventional power conversion has lower efficiency. Our low power conversion circuit concept based on 'synchronous rectification' will produce stable, regulated voltages as low as 0.6V with at least 85% efficiency. Requirements for consumer electronics have produced a variety of low power circuits designed to operate from one or two Li-ion batteries in series. These parts are generally rated for operation down to -40°C with a few rated for -55°C. These and other representative circuits must be tested for reliable operation at temperatures extending into cryogenic regions. If the entire electronic circuit including power supply will operate reliably at cryogenic temperatures, then only the battery itself will need to be heated to its minimum operating temperature, saving a significant amount of battery power. It is also possible to harness thermal discharge of the circuits as a heat source for the batteries. We will explore the potential for the use of cold temperature batteries to provide the power system for our optimized mass spectrometer instrument package.

Improvements in operation of Li–based battery systems below –40°C have already been demonstrated in rechargeable Li–ion systems (Yardney–Lithion, SAFT low temperature organic electrolyte systems to enhance conductivity and charge transfer, and lower TRL Li–S and Li–$CuCl_2$ systems).

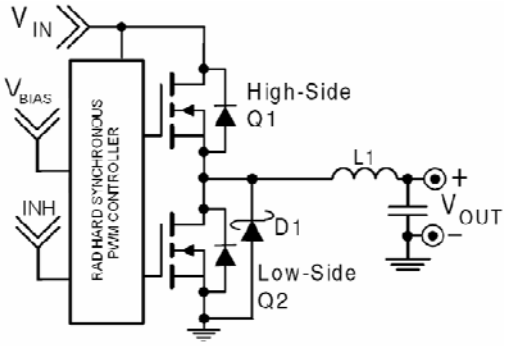

Figure 3. Low Voltage Power Supply Concept

2.4. Volatile Detection Application

The neutral mass spectrometer VAPoR (Volatile Analysis by Pyrolysis of Regolith), capable of measuring H_2 and H isotopes, He and He isotopes, CO, CO_2, CH_4, H_2O, N_2, O_2, and O isotopes, Ar isotopes, NH_3, HCN, H_2S, SO_2 to <1000 ppm and to withstand the release of HF, HCl, or Hg, is the instrument under consideration for this technology demonstration. The quadrupole version, a component of MSL SAM (Mars Science Laboratory Sample Analysis for Mars) is currently being prepared, minus the pyrolysis unit, for the LADEE (Lunar Atmosphere Dust Environment Experiment) mission (<3 kg, <10W average) and a far more compact, lower power Time of Flight (TOF) version (<1 kg, 1W average) with a pyrolysis unit is under development through the ASTID program. TOF VAPoR is being designed to increase the mass range and sensitivity to (1–1000 amu/charge with a mass resolution (Delta–m/m) ~500). The instrument can operate in two modes: 1) an atmospheric sampling mode where the lunar exosphere can be measured directly by the mass spectrometer through the atmospheric inlet (e.g., H_2, He, Ar, H_2O), and 2) an evolved gas mode where volatiles are released by heating the regolith from ambient temperature up to 1400°C and then detected directly by the mass spectrometer. Isotopic ratios for some key species released from the regolith (e.g., D/H in H_2O) will be measured to determine the species source (e.g. cometary vs. solar wind). Major subsystems are particle optics (with the greatest variation in design and challenges for performance), the instrument detector system, power supply, and CC&DH. The pulse amplifier (RF oscillator) is currently the largest challenge, with a high voltage power supply and a survival limit of -50°C. Power, mass, and the need for mechanisms can be decreased by limiting the range of masses analyzed. In addition to or in lieu of the power–hungry pyrolysis, laser ablation can vaporize subsurface volatiles for analysis as a function of depth. However, the accuracy of determination of the abundance of volatiles released and critical data on the bulk chemistry and mineralogy of the sample that is enabled by evolved gas analysis using an oven with a controlled ramp rate [6] would not be possible with laser ablation.

By integrating ULT/ULP electronics and power components fully in VAPoR, we believe we could provide a demonstration ISRU instrument for surface composition, including volatiles and other species up to mass 64 with detection limits of <1000 ppm for under 5 kg mass within an instrument package of well under 60 kg,. This estimate would not include the sample acquisition device for samples. We would collaborate with those developing laser ablation components capable of vaporizing samples at the surface and as a function of depth on the order of centimeters.

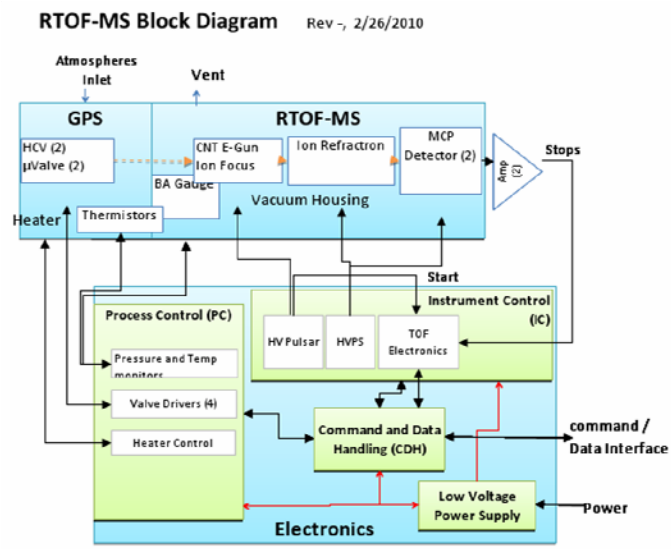

Figure 4. Block Diagram of VaPoR.

2.5. Results

A newer generation CMOS RHBD technology was developed for 0.25µ for several ASICs for NASA's missions including LDCM, GOES-R, MMS (Magnetospheric Multi–Scale Mission). This is operating at a core voltage of 2.5 volt. The circuit has already passed low-temperature test down to 25K, operating at 80% efficiency at 40K. At this level of CMOS technology, one ASIC can include over several million transistors to support complicated processing logic. A 130nm RHBD test chip with memory elements is being developed. At this CMOS node, core voltage will drop to 1.2 volt or 1.1 volt and will allow system-on-a-chip concept to be implemented. A 90nm RHBD test chip has been submitted for fabrication. At this CMOS node, core voltage will be close to 1 volt and will allow us to realize sub-system as well as system power reduction at relatively large scale, estimated for over 50% for conventional C&DH system. So far, the developed digital core includes several communication channel coders, several high-end data compression coders, reconfigurable base-band modulator, enhanced micro-processor CPU, mass-memory protection circuit, large-scale multi-cross-correlators-on-a-chip and on-chip memory modules. These will be available for any System on a Chip concept in addition to other openly available cores such as the Spacewire, ARM processor, etc.

Our collaborators at JPL [7] have successfully operated Li–based batteries with special electrolytes down to –60°C, with the goal of achieving –80°C in the short term. We have obtained representative batteries and voltage regulators. Several of the available highly efficient voltage regulators that use switching technology or synchronous rectification have already been tested successfully to -50°C, confirming minimum performance specifications. Currently, we have initiated cold temperature testing of power system components for and designing one or more rechargeable battery systems capable of operating with stability below –40°C over repeated cycles with minimal mass and power. We are performing an instrument integration study of an advanced version of an instrument/instrument package concept that fully incorporates low temperature low power technologies. If the entire electronic circuit including power supply will operate reliably at cryogenic temperatures, then only the battery itself would need to be heated to its minimum operating temperature, saving a significant amount of battery power.

3. Conclusions

The recent plans for NASA indicate particular interest in instruments and technology systems for robotic precursors that can support in situ resource utilization on any planetary target. Our efforts are designed to lead to the development of the necessary instruments with greatly reduced mass, volume, power, and capability to operate under extremely cold conditions in cold traps where resources could be found with minimal thermal protection, mitigating the need for costly radioisotope based power systems. We are leveraging DOE–funded JPL Cold Temperature Battery Development efforts, GSFC SMD/ESMG OSEWG (Optimizing Science and Exploration Working Group) efforts as well as DARPA–funded ULT/ULP technology development work. Future programs for which this technology could be applied are SMD/ESMD sponsored science, engineering, and instrument development programs as well as Discovery and small, low cost payload programs applied to lander/sample return/rover missions. Based on our analyses to date, improvements needed to successfully deploy and operate packages on most surfaces in the solar system, including the lunar environment, will require the incorporation of ultra low temperature and ultra low power components now under development, as well as the development of a managed and distributed power system with much greater capability for surviving at low temperatures.

We are in the process of achieving our ultimate goal of developing a plan for advancing recommended technologies in application to lunar surface instruments, payloads, and associated systems to minimize mass, volume, and power requirements as a precursor to design guideline generation. This approach will leverage NASA's existing and projected unique capabilities within the creation and implementation of these technologies that are critically in demand to serve NASA's Vision for Exploration.

Acronyms

ALSEP	-	Apollo Lunar Science Experiment Package
ASICS	-	Application Specific Integrated Circuit
ASTID	-	Astrobiology Science and Technology Instrument Development
CAMBR	-	Center for Advanced Microelectronics and Bimolecular Research
CC&DH	-	Communications Control and Data Handling
CULPRIT	-	CMOS Ultra-low Power Radiation Tolerant
DALI	-	Dark Ages Lunar Interferometer
DARPA	-	Defense Advanced Research Projects Agency
DOD	-	Department of Defense
DOE	-	Department of Energy
ESMD	-	Exploration Systems Mission Directorate
FPGA	-	Field Programmable Gate Array
GOES	-	Geostationary Operational Environmental Satellites
IDL	-	Instrument Development Laboratory
JWST	-	James Webb Space Telescope
ISRU	-	In Situ Resource Utilization
LADEE	-	Lunar Atmosphere
LDCM	-	LANDSAT Data Continuity Mission
LEMS	-	Lunar Environmental Monitoring Station
MMS	-	Magnetosphere Multi–Scale mission
MSL	-	Mars Science Laboratory
OSEWG	-	Optimizing Science and Exploration Working Group
RHBD	-	Radiation Hard by Design
ROLSS	-	Radio Observatory for Lunar Surface Science
SAM	-	Sample Analysis at Mars
SMD	-	Science Mission Directorate
SOC	-	System on a Chip
ULT	-	Ultra Low Temperature

ULP - Ultra Low Power
VaPoR - Volatile Analysis by Pyrolysis of Regolith

Acknowledgments

We would like to acknowledge the important discussion pertaining to this work we have had with our colleagues involved with development of radiation, fields, and particle instruments, including Jack Trombka, Danny Glavin, and Michael Collier, and in the LSSO Lunar Laser Transponder and Radio Observatory for Lunar Suitcase Science instrument development, including Joe Lazio, Robert MacDowall, and Louis DeMaio, Philip Dabney, Stephen Merkowitz and Jeff Livas. We thank the GSFC Instrument Development Laboratory personnel, including Tammy Brown and Martha Chu, for their amazing support.

References

1. Clark, P. E., Millar, P. S., Beaman, B., Yeh, P. S., Cooper, L., Fend, S. and Young, E., Ultra Low Temperature Ultra Low Power Instrument Packages for Planetary Surfaces, in Proceedings of *Space, Propulsion and Energy Sciences International Forum*, edited by G. A. Robertson, AIP **CP1208**, Melville, New York, 2010 p. 541–548.
2. Clark, P. E., Millar, P. S., Yeh, P. S., Lorenz, J., Feng, S., Powell, W., Beaman, B., Brown, K. and Leshin L., Enabling Technology for Lunar Surface Science, in Proceedings of *Space, Propulsion and Energy Sciences International Forum* , edited by G. A. Robertson, AIP **CP1103**, Melville, New York, 2009 p. 599–607.
3. Maki, G. and Yeh, P. S., Radiation Tolerant Ultra Low Power CMOS Microelectronics: Technology Development Status, ESTO Conference, Earth Sciences Technology Conference, 2003.
4. West, W. C., Whitacre, J. F., Brandon, E. J. and Ratnakumar, B.V., Lithium micro-battery development, *IEEE Aerospace and Electronic Systems Magazine*, 2000 **16**(8):31 – 33.
5. Kolawa E. A. and EE Technologies Study Team, Extreme Environment Technologies for Future Space Science Missions, NASA Technical Report, **JPL D-32832**, 2007.
6. ten Kate, I.L., Cardiff, E., Dworkin, J., Feng, S., Holmes, V., Malespin, C., Stern, J., Swindle, T. and Glavin, D. P., VAPoR – Volatile Analysis by Pyrolysis of Regolith – an Instrument for detection of water, noble gases, and organics on the Moon, *Planetary and Space Science* 2010 **58**:1007–1017.
7. Smart, M. C. and Bugga, R. V., Improved Low Temperature Performance of Li–Ion Cells Using New Electrolytes, NASA Tech Briefs, Materials, **NPO-46180**, 2010.