University of Nebraska - Lincoln
DigitalCommons@University of Nebraska - Lincoln

The Handbook: Prevention and Control of Wildlife Damage | Wildlife Damage Management, Internet Center for

1-1-1994

SHREWS

Robert H. Schmidt
Assistant Professor, Department of Fisheries and Wildlife, Utah State University, Logan, Utah 84322-5210

Follow this and additional works at: http://digitalcommons.unl.edu/icwdmhandbook

Part of the Environmental Sciences Commons

Schmidt, Robert H., "SHREWS" (1994). *The Handbook: Prevention and Control of Wildlife Damage.* Paper 55.
http://digitalcommons.unl.edu/icwdmhandbook/55

This Article is brought to you for free and open access by the Wildlife Damage Management, Internet Center for at DigitalCommons@University of Nebraska - Lincoln. It has been accepted for inclusion in The Handbook: Prevention and Control of Wildlife Damage by an authorized administrator of DigitalCommons@University of Nebraska - Lincoln.

Robert H. Schmidt
Assistant Professor
Department of Fisheries and Wildlife
Utah State University
Logan, Utah 84322-5210

SHREWS

Fig. 1. A masked shrew, *Sorex cinereus*

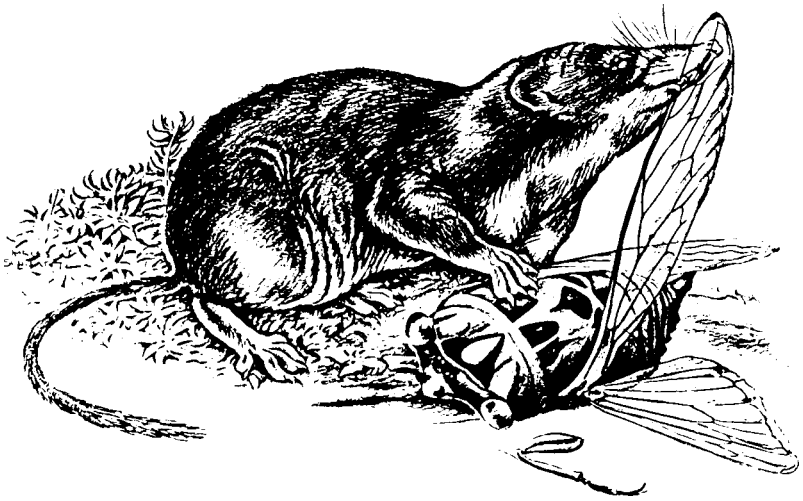

Damage Prevention and Control Methods

Exclusion

Rodent-proof structures also exclude shrews.

Cultural Methods

Mowing may decrease preferred habitat and food.

Repellents

None are registered.

Toxicants

None are registered.

Fumigants

None are registered.

Trapping

Mouse trap (snap trap).

Small box trap.

Pit trap.

Shooting

Not practical.

Other Methods

Cats may reduce densities around structures. Owls consume large numbers of shrews. Mowed grass around structures may increase predation.

Identification

The shrew is a small, mouse-sized mammal with an elongated snout, a dense fur of uniform color, small eyes, and five clawed toes on each foot (Fig. 1). Its skull, compared to that of rodents, is long, narrow, and lacks the zygomatic arch on the lateral side characteristic of rodents. The teeth are small, sharp, and commonly dark-tipped. Pigmentation on the tips of the teeth is caused by deposition of iron in the outer enamel. This deposition may increase the teeth's resistance to wear, an obvious advantage for permanent teeth that do not continue to grow in response to wear. The house shrew (*Suncus murinus*) lacks the pigmented teeth. Shrew feces are often corkscrew-shaped, and some shrews (for

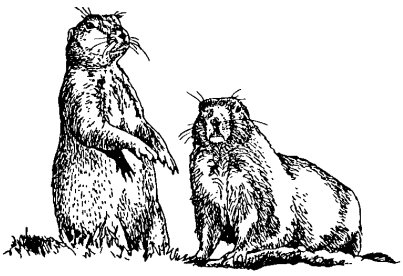

PREVENTION AND CONTROL OF WILDLIFE DAMAGE — 1994

Cooperative Extension Division
Institute of Agriculture and Natural Resources
University of Nebraska - Lincoln

United States Department of Agriculture
Animal and Plant Health Inspection Service
Animal Damage Control

Great Plains Agricultural Council
Wildlife Committee

example, the desert shrew [*Notiosorex crawfordi*]) use regular defecation stations. Albino shrews occur occasionally. Shrews are similar to mice except that mice have four toes on their front feet, larger eyes, bicolored fur, and lack an elongated snout. Moles also are similar to shrews, but are usually larger and have enlarged front feet. Both shrews and moles are insectivores, whereas mice are rodents.

Worldwide, over 250 species of shrews are recognized, with over 30 species recognized in the United States, the US Territories, and Canada (Table 1). Specific identification of shrews may be difficult. Taxonomists are still refining the phylogenetic relationships between populations of shrews. Consult a regional reference book on mammals, or seek assistance from a qualified mammalogist.

Range

Shrews are broadly distributed throughout the world and North America. For specific range information, refer to one of the many references available on mammal distribution for your region. Publications by Burt and Grossenheider (1976), Hall (1981), and Junge and Hoffmann (1981) are particularly helpful.

Habitat

Shrews vary widely in habitat preferences throughout North America. Shrews exist in practically all terrestrial habitats, from montane or boreal regions to arid areas. The northern water shrew (*Sorex palustris*) prefers marshy or semiaquatic areas. Regional reference books will help identify specific habitats. A word of caution is in order, however. Distribution studies based on the results of snap-trapping research have a pronounced tendency to understate the abundance of shrews. Studies using pit traps are more successful in assessing the presence or absence of shrews in a particular location.

Food Habits

Shrews are in the taxonomic order Insectivora. As the name implies, insects make up a large portion of the typical shrew diet. Food habit studies have revealed that shrews eat beetles, grasshoppers, butterfly and moth larvae, ichneumonid wasps, crickets, spiders, snails, earthworms, slugs, centipedes, and millipedes. Shrews also eat small birds, mice, small snakes, and even other shrews when the opportunity presents itself. Seeds, roots, and other vegetable matter are also eaten by some species of shrews.

General Biology, Reproduction, and Behavior

Shrews are among the world's smallest mammals. The pigmy shrew (*Sorex hoyi*) is the smallest North American mammal. It can weigh as little as 0.1 ounce (2 g). Because of their small size, shrews have a proportionally high surface-to-volume ratio and lose body heat rapidly. Thus, to maintain a constant body temperature, they have a high metabolic rate and need to consume food as often as every 3 to 4 hours. Some shrews will consume three times their body weight in food over a 24-hour period.

Shrews usually do not live longer than 1 to 2 years, but they have 1 to 3 litters per year with 2 to 10 young per litter. Specific demographic features vary with the species. The gestation period is approximately 21 days.

Shrews have an acute sense of touch, hearing, and smell, with vision playing a relatively minor role. Some species of shrews use a series of high-pitched squeaks for echolocation, much as bats do. However, shrews probably use echolocation more for investigating their habitat than for searching out food. Glands located on the hindquarters of shrews have a pungent odor and probably function as sexual attractants. *Blarina brevicauda*, and presumably *B. carolinensis* and *B. hylophaga* (the short-tailed shrews), have a toxic venom in their saliva that may help them subdue small prey.

Some shrews are mostly nocturnal; others are active throughout the day and night. They frequently use the tunnels made by voles and moles. During periods of occasional abundance, shrews may have a strong, although temporary, negative impact on mouse or insect populations. Many predators kill shrews, but few actually eat them. Owls in particular consume large numbers of shrews.

Some shrews exhibit territorial behavior. Depending on the species and the habitat, shrews range in density from 2 to 70 individuals per acre (1 to 30/hectare) in North America.

Damage

Most species of shrews do not have significant negative impacts and are not abundant enough to be considered pests (Schmidt 1984). Shrews sometimes conflict with humans, however. The vagrant shrew (*Sorex vagrans*) has been reported to consume the seeds of Douglas-fir (*Pseudotsuga menziesii*), although the seeds constitute a minor part of the diet. The masked shrew (*Sorex cinereus*) destroyed from 0.3% to 10.5% of white spruce (*Picea glauca*) seeds marked over a 6-year period (Radvanyi 1970). Lodgepole pine (*Pinus contorta*) seeds are also eaten by the masked shrew. Radvanyi (1966, 1971) has published pictures of shrew, mouse (*Peromyscus*, *Microtus*, and *Clethrionomys* spp.), and chipmunk (*Eutamias* spp.) damage to lodgepole pine seeds, and describes shrew damage to white spruce seeds.

The northern water shrew (*Sorex palustris*) may cause local damage by consuming eggs or small fish at hatcheries. The least shrew (*Cryptotis parva*), also known as the bee shrew, sometimes enters hives and destroys the young brood (Jackson 1961). The northern short-tailed shrew (*Blarina brevicauda*) has been reported to damage ginseng (*Panax* spp.) roots. Short-tailed and masked shrews reportedly can climb trees where they can feed on

Table 1. Shrews of the United States, the US Territories, and Canada (from Banks et al. 1987, and Jones et al. 1992).

Scientific name	Common name
Blarina brevicauda	Northern short-tailed shrew
Blarina carolinensis	Southern short-tailed shrew
Blarina hylophaga	Elliot's short-tailed shrew
Cryptotis parva	Least shrew
Notiosorex crawfordi	Desert shrew
Sorex alaskanus	Glacier Bay water shrew
Sorex arcticus	Arctic shrew
Sorex arizonae	Arizona shrew
Sorex bairdii	Baird's shrew
Sorex bendirii	Pacific water or Marsh shrew
Sorex cinereus	Cinereus or Masked shrew
Sorex dispar	Long-tailed or Rock shrew
Sorex fontinalis	Maryland or Eastern shrew
Sorex fumeus	Smokey shrew
Sorex gaspensis	Gaspe shrew
Sorex haydeni	Hayden's shrew
Sorex (Microsorex) hoyi	Pygmy shrew
Sorex hydrodromus	Pribilof Island shrew
Sorex jacksoni	St. Lawrence Island shrew
Sorex longirostris	Southeastern shrew
Sorex lyelli	Mt. Lyell shrew
Sorex merriami	Merriam's shrew
Sorex monticolus	Montane or Dusky shrew
Sorex nanus	Dwarf shrew
Sorex ornatus	Ornate shrew
Sorex pacificus	Pacific shrew
Sorex palustris	Northern water shrew
Sorex preblei	Preble's shrew
Sorex sonomae	Fog shrew
Sorex tenellus	Inyo shrew
Sorex trowbridgii	Trowbridge's shrew
Sorex tundrensis	Tundra shrew
Sorex ugyunak	Barren ground shrew
Sorex vagrans	Vagrant shrew
Suncus murinus	House shrew

eggs or young birds in a nest or consume suet in bird feeders.

The pugnacious nature of shrews sometimes makes them a nuisance when they live in or near dwellings. Shrews occasionally fall into window wells, attack pets, attack birds or chipmunks at feeders, feed on stored foods, contaminate stored foods with feces and urine, and bite humans when improperly handled. Potential exists for the transmission of diseases and parasites, but this is poorly documented.

The house shrew (*Suncus murinus*) is an introduced species to Guam. It has been reported as a host for the rat flea (*Xenopsylla cheopis*) which can carry the plague bacillus (*Yersinia pestis*) (Churchfield 1990). Compared to rat (*Rattus* spp.) numbers, however, house shrew numbers are usually low, and risk of plague transmission is probably minimal. The house shrew is accustomed to living around humans and houses, which increases its damage potential. It is considered smelly and noisy, making incessant, shrill, clattering sounds as it goes along (Churchfield 1990:149). On occasion it destroys stored grain products.

Legal Status

Shrews are not protected by federal laws, with one exception. The southeastern shrew (*Sorex longirostris fischeri*) is protected in the Great Dismal Swamp in Virginia and North Carolina by the Endangered Species Act of 1973. Nowak and Paradiso (1983:131) list the following additional species or populations of concern: *Sorex preblei*, *Sorex trigonirostri*, and *Sorex merriami* in Oregon; *Sorex trigonirostri eionis* in Florida along the Homossassee River; and *Sorex palustris punctulatus* in the southern Appalachians.

Some states may have special regulations regarding the collection or killing of nongame mammals. Consult your local wildlife agency or Cooperative Extension office for up-to-date information.

Damage Prevention and Control Methods

Exclusion

Rodent-proofing will also exclude shrews from entering structures. Place hardware cloth of 1/4-inch (0.6-cm) mesh over potential entrances to exclude shrews. The pygmy shrew (*Sorex hoyi*) may require a smaller mesh. Coarse steel wool placed in small openings can also exclude shrews.

Cultural Methods

Regular mowing around structures should decrease preferred habitat and food, and may increase predation. Where shrews are eating tree seeds, plant seedlings instead to eliminate damage.

Repellents

No repellents are registered for use against shrews.

Toxicants

No toxicants are registered to poison shrews.

Fumigants

No fumigants are registered for use against shrews. It would be impractical to use fumigants because of the porous nature of typical shrew burrows.

Trapping

Mouse traps (snap traps), box traps, and pit traps have been used to collect shrews. Set mouse traps in runways or along walls, with the traps set at a right angle to the runway and the triggers placed over the runway (Fig. 2a). Small box traps can be set parallel to and inside of runways, or parallel to walls around structures (Fig. 2b). Bait the traps with a mixture of peanut butter and rolled oats. A small amount of bacon grease or hamburger may increase the attractiveness of the bait.

A pit trap consists of a gallon jar or a large can sunk into the ground under a runway until the lip of the container is level with the runway itself (Fig. 2c). Bait is not necessary. A small amount of bacon grease smeared around the top of the container may be an effective attractant, but this may also attract large scavengers. Pit traps are more effective for capturing shrews than snap traps, although the increased labor involved in setting a pit trap may not be justified when trying to capture only one or two animals. Monitor pit traps daily, preferably in the morning before the temperature gets hot, although Churchfield (1990) recommends checking traps four times in a 24-hour period. Place cotton wool in the pit trap containers to reduce the mortality of trapped animals. This is especially important to ensure the successful release of nontarget animals. Since shrews are generally beneficial in consuming insects, live-captured animals can be relocated in suitable habitat more than 200 yards (193 m) from the capture site.

The traps and placement procedures described above are also effective for catching mice. Note the identification characteristics given above for determining whether the captured animal is indeed a shrew. Sometimes birds are captured in traps set for shrews. If this

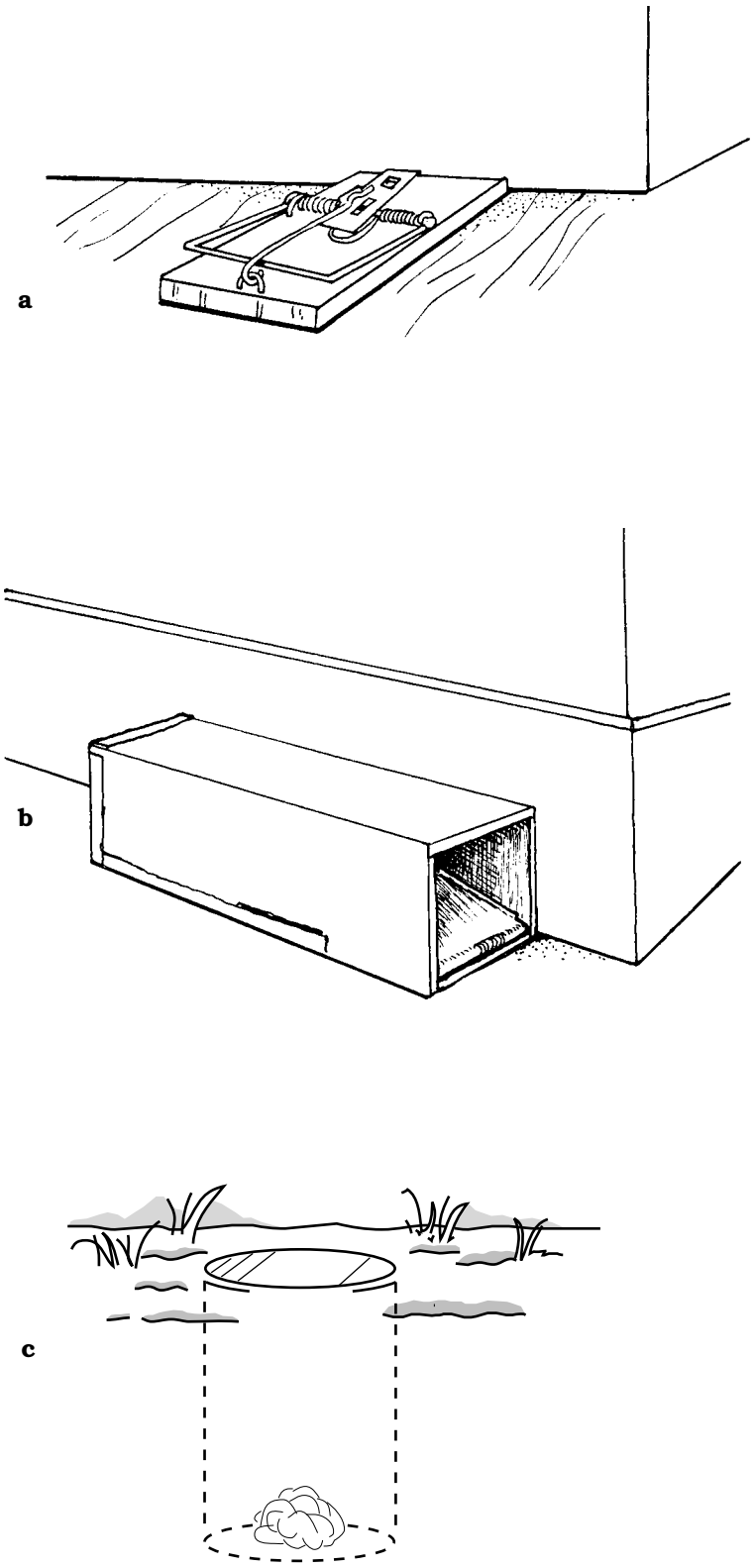

Fig. 2. Traps and trap placement for capturing shrews: a) mouse trap (snap trap) set perpendicular to wall, with trigger next to wall; b) box trap set parallel to wall; c) pit trap sunk in ground over runway (includes cotton wool).

occurs, try placing a cover over the traps, a cover over the bait, moving the traps to another location, or omitting rolled oats from the bait mixture.

Shooting

Shooting is not practical and is not recommended. It is illegal in some states and localities.

Other Methods

Owls may reduce local populations of shrews in poor habitats, but this has not been documented. Domestic cats appear to be very good predators of shrews, although they seldom eat them (presumably because of the shrew's unpleasant odor). Cats may be effective at temporarily reducing localized shrew populations living in poor cover around structures. Cat owners may find dead, uneaten shrews brought inside the home. Rather than reduce the shrew population outside to prevent this, simply monitor locations regularly used by your cat, and dispose of dead shrews by placing a plastic bag over your hand, picking up the dead animal, turning the bag inside out while holding the shrew, sealing the bag, and discarding it with the garbage. Using a plastic bag in this manner reduces the potential for flea, tick, helminth parasite, or disease transmission.

Economics of Damage and Control

No studies concerning the economics of shrew damage and control are available. In Finland, shrews appear to play a more important role as predators of conifer seeds than they do in North America. Overall, the economics of damage by shrews is not considered great.

Folklore and Etymology

Chambers (1979) reviewed some aspects of shrew biology and folklore: At one time in Europe it was thought that if a shrew ran across a farm animal that was lying down, the animal would suffer intense pain. To counteract this, a shrew would be walled up in an ash tree (a 'shrew ash'), and then a twig taken from the tree would be brushed onto the suffering animal to relieve the pain. The ancient Egyptians believed the shrew to be the spirit of darkness. The shrew has also been mentioned as a Zuni beast god, providing protection for stored grains from raids by rats and mice (Hoffmeister 1967).

At least one tall tale involving shrews has been found to be true. The discovery that some shrews possess a toxic venom confirms stories about the poisonous bite of shrews.

The etymology of the word shrew is also interesting. The Old English form of the word was *screawa*, or shrew-mouse. The Middle English form was *shrewe*, meaning an evil or scolding person. Thus shrew has a double meaning. It defines the small mammal as well as an ill-tempered, scolding human (usually female).

Shrews are in the family Soricidae. *Soricis* is the genitive form of *sorex*, a Latin word for shrew-mouse.

Acknowledgments

I appreciate the assistance and comments of C. L. Shugart, S. E. Hygnstrom, and four anonymous reviewers while developing this manuscript. L. Thomas and J. Shepard provided up-to-date information on the legal status of *Sorex longirostris fischeri.*

Figure 1 is reproduced with permission from Schwartz and Schwartz (1981).

Figure 2 was drawn by Jill Sack Johnson.

For Additional Information

Banks, R. C., R. W. McDiarmid, and A. L. Gardner, eds. 1987. Checklist of vertebrates of the United States, the US Territories, and Canada. US Dep. Inter, Fish Wildl. Serv., Resour. Pub. 166. 79 pp.

Burt, W. H., and R. P. Grossenheider. 1976. A field guide to the mammals. Houghton Mifflin Co., Boston. 289 pp.

Chambers, K. A. 1979. A country-lover's guide to wildlife. The Johns Hopkins Univ. Press, Baltimore, Maryland 228 pp.

Churchfield, S. 1990. The natural history of shrews. Cornell Univ. Press, Ithaca, New York. 178 pp.

Fowle, C. D., and R. Y. Edwards. 1955. An unusual abundance of short-tailed shrews, *Blarina brevicauda*. J. Mammal. 36:36-41.

Hall, E. R. 1981. The mammals of North America. Vol. 1. John Wiley and Sons, New York. 690 pp.

Hoffmeister, D. F. 1967. An unusual concentration of shrews. J. Mammal. 48:462-464.

Jackson, H.H.T. 1961. Mammals of Wisconsin. Univ. Wisconsin Press, Madison. 504 pp.

Jones, J. K., Jr., R. S. Hoffmann, D. R. Rice, C. Jones, R. J. Baker, and M. D. Engstrom. 1992. Revised checklist of North American mammals north of Mexico, 1991. Occas. Papers Mus. Texas Tech Univ. 146:1-23.

Junge, J. A., and R. S. Hoffmann. 1981. An annotated key to the long-tailed shrews (genus *Sorex*) of the United States and Canada, with notes on Middle American *Sorex*. Univ. Kansas, Mus. Nat. Hist., Occas. Papers 94:1-48.

Martin, I. G. 1981. Venom of the short-tailed shrew (*Blarina brevicauda*) as an insect immobilizing agent. J. Mammal. 62:189-192.

Nowak, R. M., and J. L. Paradiso. 1983. Walker's mammals of the world. Vol. 1. The Johns Hopkins Univ. Press, Baltimore, Maryland. 568 pp.

Radvanyi, A. 1966. Destruction of radio-tagged seeds of white spruce by small mammals during summer months. For. Sci. 12:307-315.

Radvanyi, A. 1970. Small mammals and regeneration of white spruce forests in western Alberta. Ecol. 51:1102-1105.

Radvanyi, A. 1971. Lodgepole pine seed depredation by small mammals in western Alberta. For. Sci. 17:213-217.

Schmidt, R. H. 1984. Shrew damage and control: a review. Proc. Eastern Wildl. Damage Control Conf. 1:143-146.

Schwartz, C. W., and E. R. Schwartz. 1981. The wild mammals of Missouri, rev. ed. Univ. Missouri Press, Columbia. 356 pp.

Tomasi, T. E. 1979. Echolocation by the short-tailed shrew *Blarina brevicauda*. J. Mammal. 60:751-759.

Editors

Scott E. Hygnstrom
Robert M. Timm
Gary E. Larson