University of Nebraska - Lincoln
DigitalCommons@University of Nebraska - Lincoln

Patents Held by Members of the Department of Chemical and Biomolecular Engineering

Chemical and Biomolecular Engineering Research and Publications

4-24-2001

Electrode Modification Using an Unzippable Polymer Paste

Ravi Saraf
University of Nebraska-Lincoln, rsaraf2@unl.edu

Follow this and additional works at: http://digitalcommons.unl.edu/chemengpatent

Part of the Chemical Engineering Commons

Saraf, Ravi, "Electrode Modification Using an Unzippable Polymer Paste" (2001). *Patents Held by Members of the Department of Chemical and Biomolecular Engineering.* Paper 61.
http://digitalcommons.unl.edu/chemengpatent/61

This Article is brought to you for free and open access by the Chemical and Biomolecular Engineering Research and Publications at DigitalCommons@University of Nebraska - Lincoln. It has been accepted for inclusion in Patents Held by Members of the Department of Chemical and Biomolecular Engineering by an authorized administrator of DigitalCommons@University of Nebraska - Lincoln.

US006221503B1

(12) **United States Patent**
Cotte et al.

(10) **Patent No.: US 6,221,503 B1**
(45) **Date of Patent: Apr. 24, 2001**

(54) **ELECTRODE MODIFICATION USING AN UNZIPPABLE POLYMER PASTE**

(75) Inventors: **John Michael Cotte**, New Fairfield, CT (US); **Judith Marie Roldan**, Ossining, NY (US); **Carlos Juan Sambucetti**, Croton-on-Hudson, NY (US); **Ravi F. Saraf**, Briarcliff Manor, NY (US)

(73) Assignee: **International Business Machines Corporation**, Armonk, NY (US)

(*) Notice: Subject to any disclaimer, the term of this patent is extended or adjusted under 35 U.S.C. 154(b) by 0 days.

(21) Appl. No.: **09/382,400**

(22) Filed: **Aug. 24, 1999**

Related U.S. Application Data

(62) Division of application No. 08/965,227, filed on Nov. 6, 1997, now Pat. No. 6,013,713.

(51) **Int. Cl.**[7] **B32B 15/02**; B05D 3/02

(52) **U.S. Cl.** **428/553**; 156/51; 427/123; 427/154; 427/226; 428/559; 428/620; 428/626; 428/643; 428/645; 428/646; 428/672; 428/457

(58) **Field of Search** 428/553, 559, 428/620, 626, 643, 645, 646, 672, 457; 156/51; 427/226, 123, 154

(56) **References Cited**

U.S. PATENT DOCUMENTS

4,539,222	*	9/1985	Anderson, Jr. et al.	427/226
5,091,346		2/1992	Inoue et al.	501/93
5,287,620		2/1994	Suzuki et al.	29/852
5,314,709		5/1994	Doany et al.	427/96
5,561,622		10/1996	Bertin et al.	365/51
5,683,529		11/1997	Makihara et al.	156/89

* cited by examiner

Primary Examiner—Deborah Jones
Assistant Examiner—Robert R. Koehler
(74) *Attorney, Agent, or Firm*—Robert M. Trepp

(57) **ABSTRACT**

A paste is described for capping electrodes with an oxide free metal layer incorporating a solvent, an unzippable polymer and particles. The electrode could be an interconnect such as a C4 bump. A method for forming a coating and for testing integrated circuit chips is also described. The invention overcomes the problem of interconnecting Pb containing electrodes that are covered with an insulating oxide on integrated circuit chips by coating the Pb containing electrode with Au to provide an oxide free surface for testing and interconnection.

6 Claims, 6 Drawing Sheets

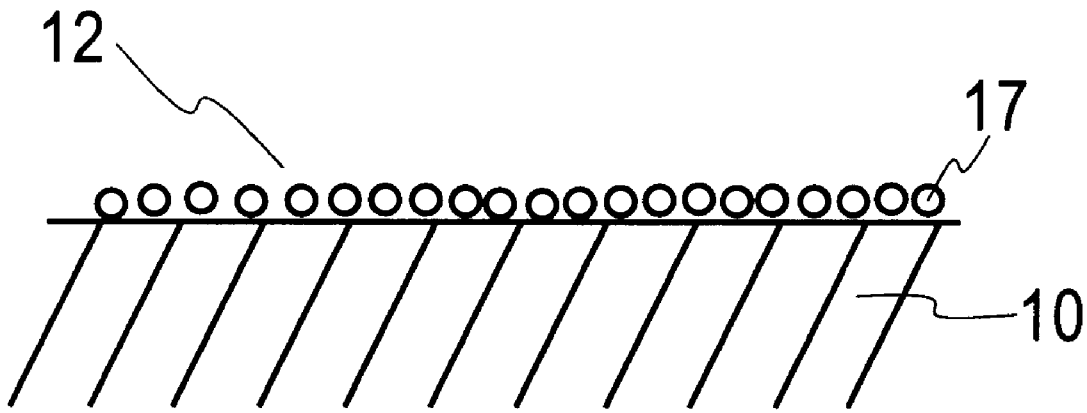

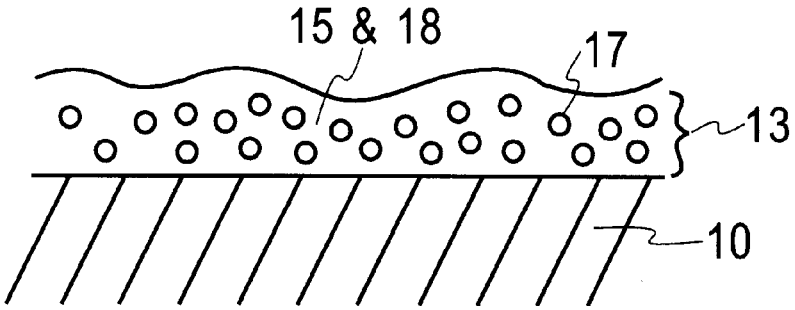

Fig. 1A

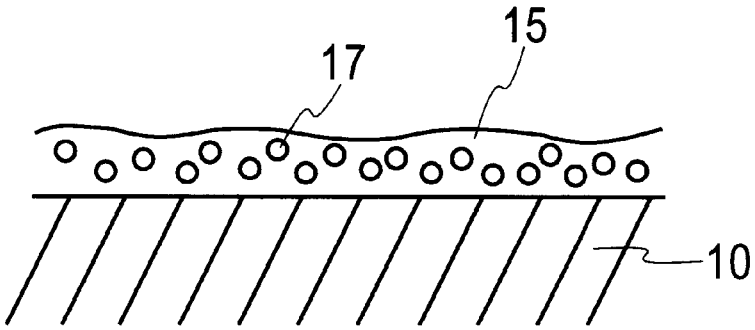

Fig. 1B

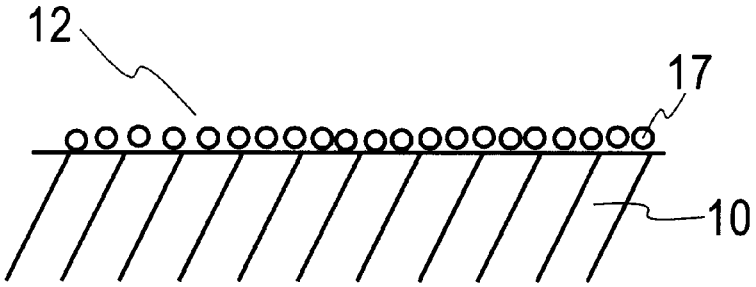

Fig. 1C

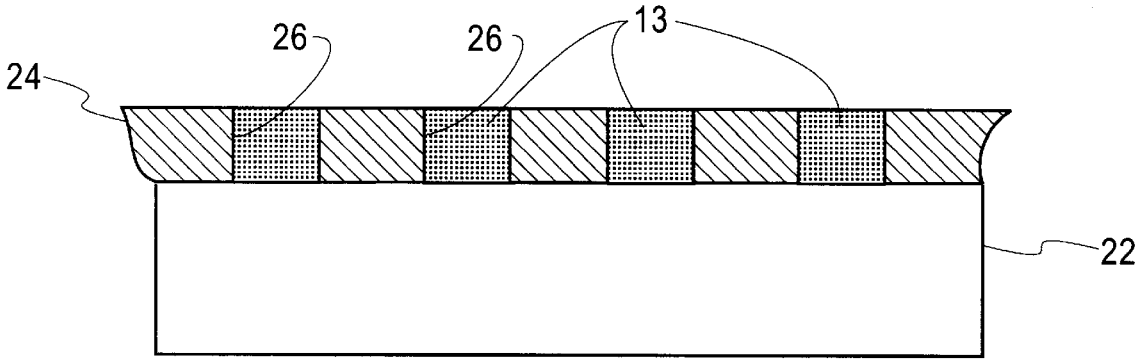

FIG. 2

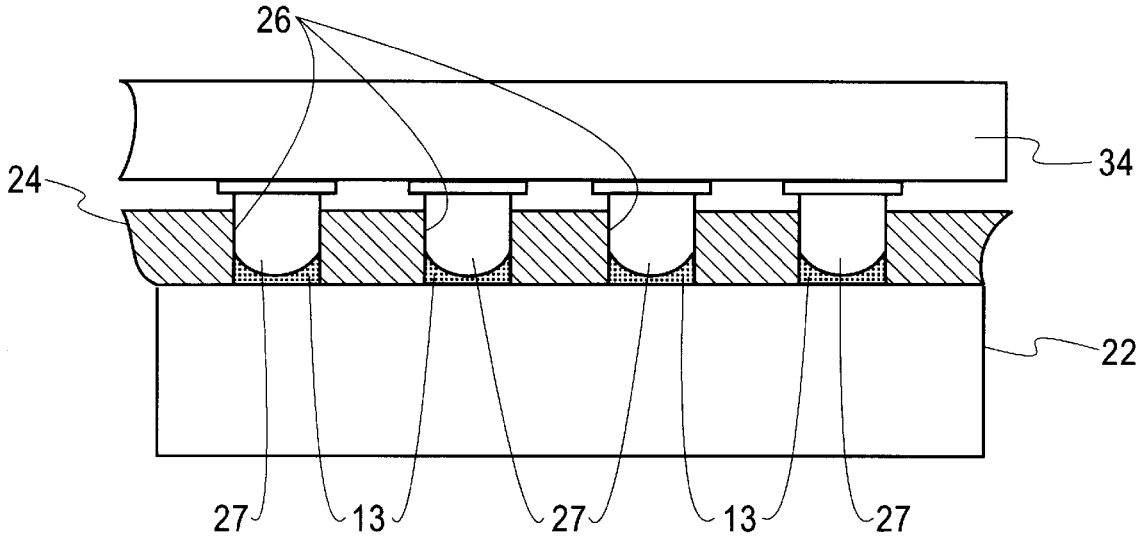

FIG. 3

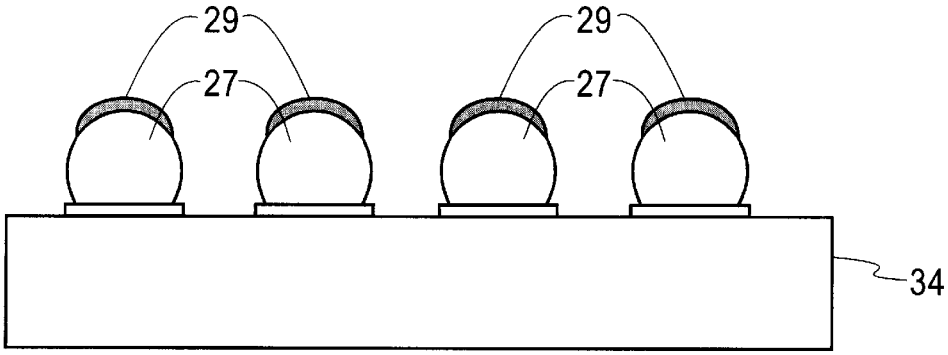

FIG. 4

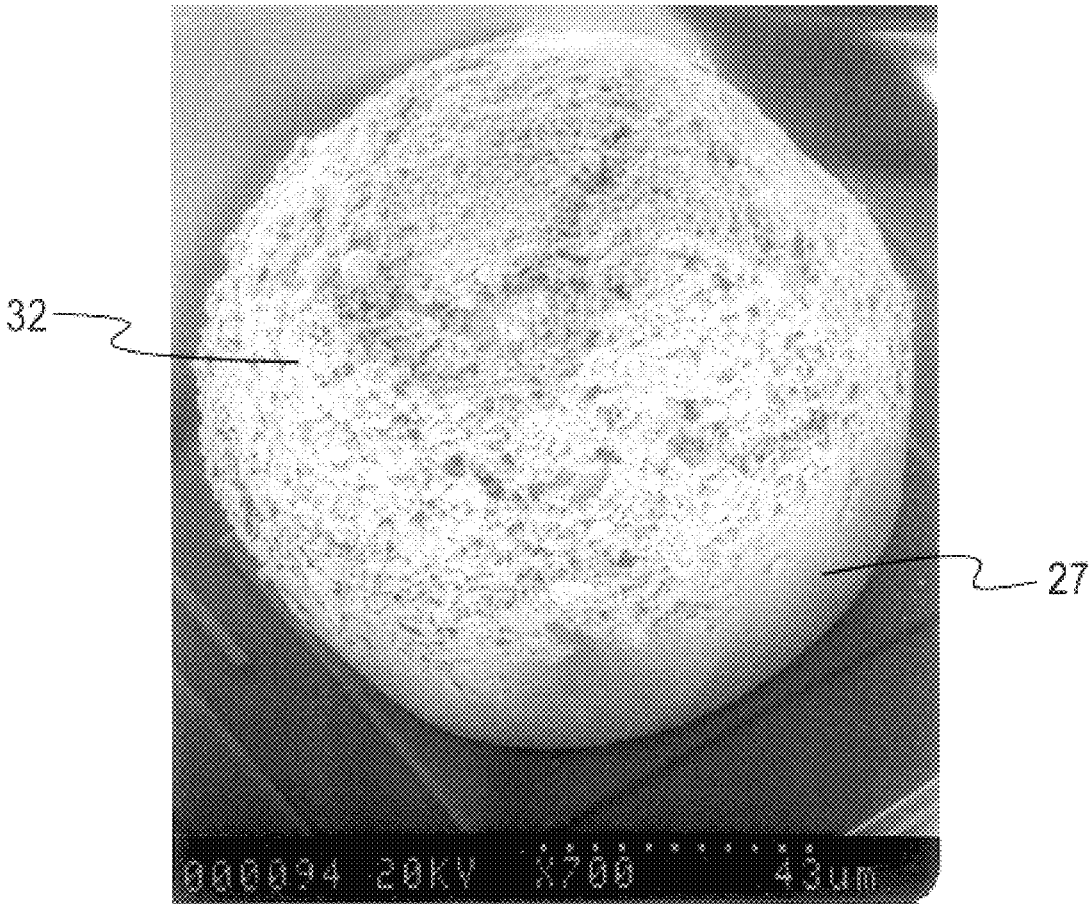

Fig. 5

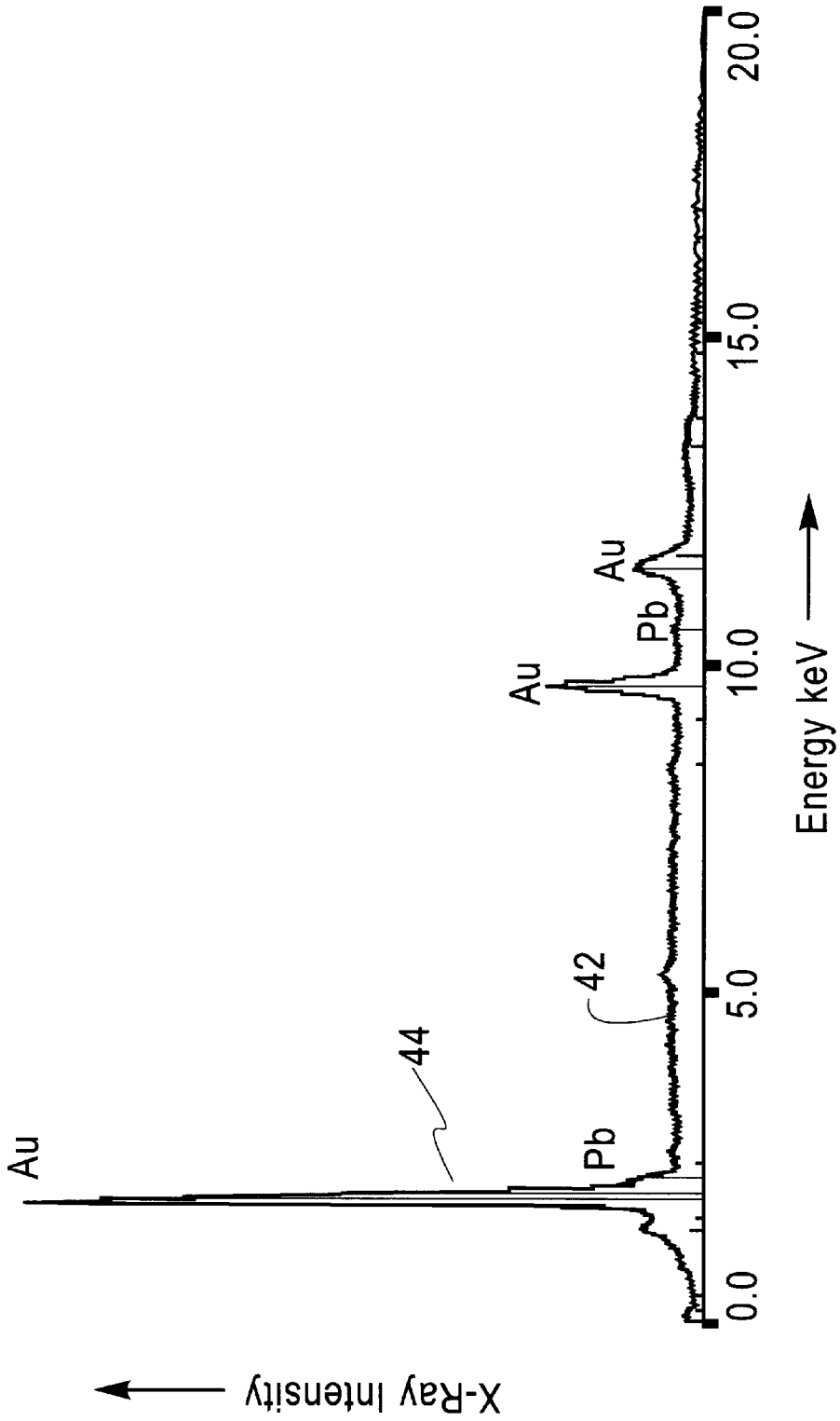

Fig. 6

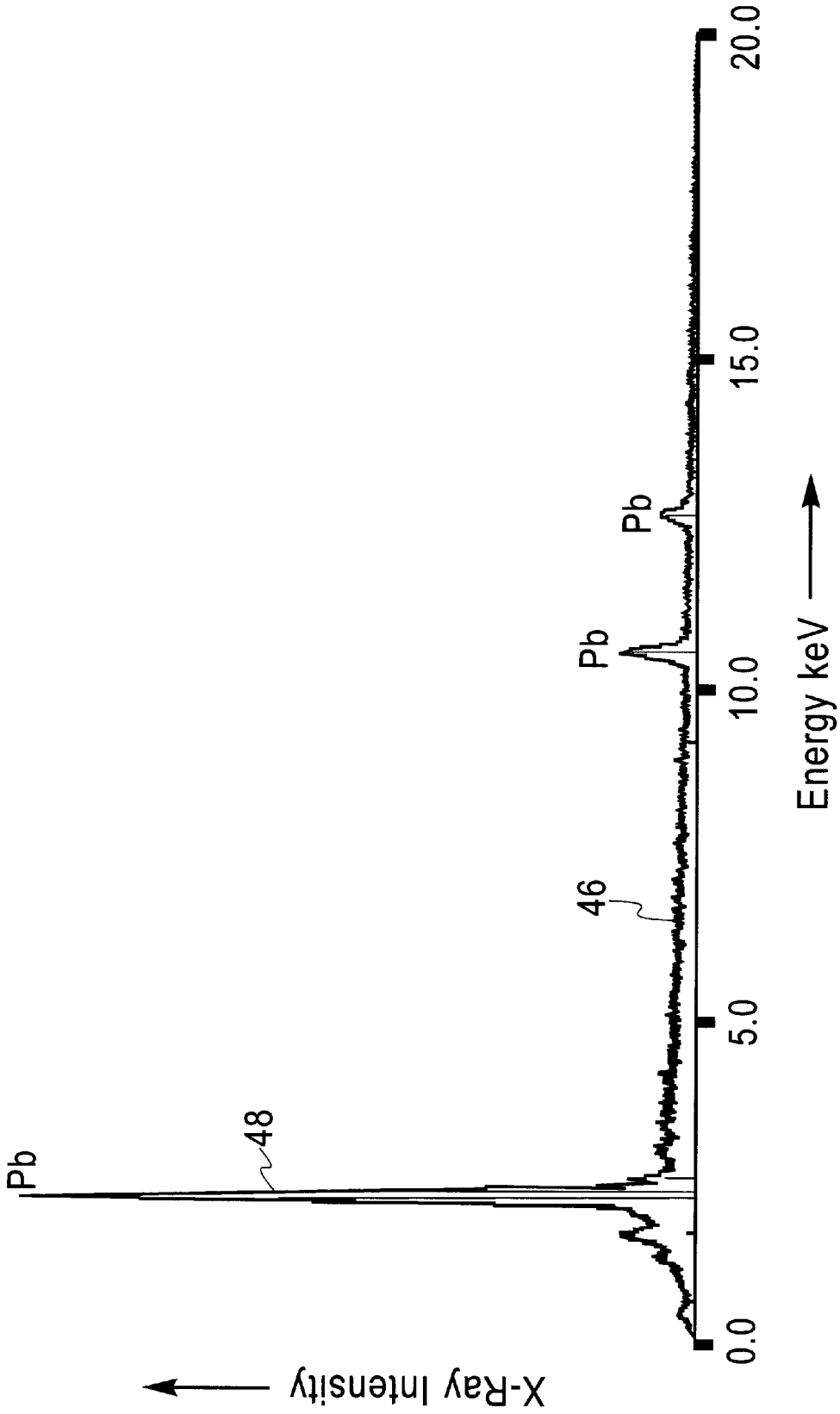

Fig. 7

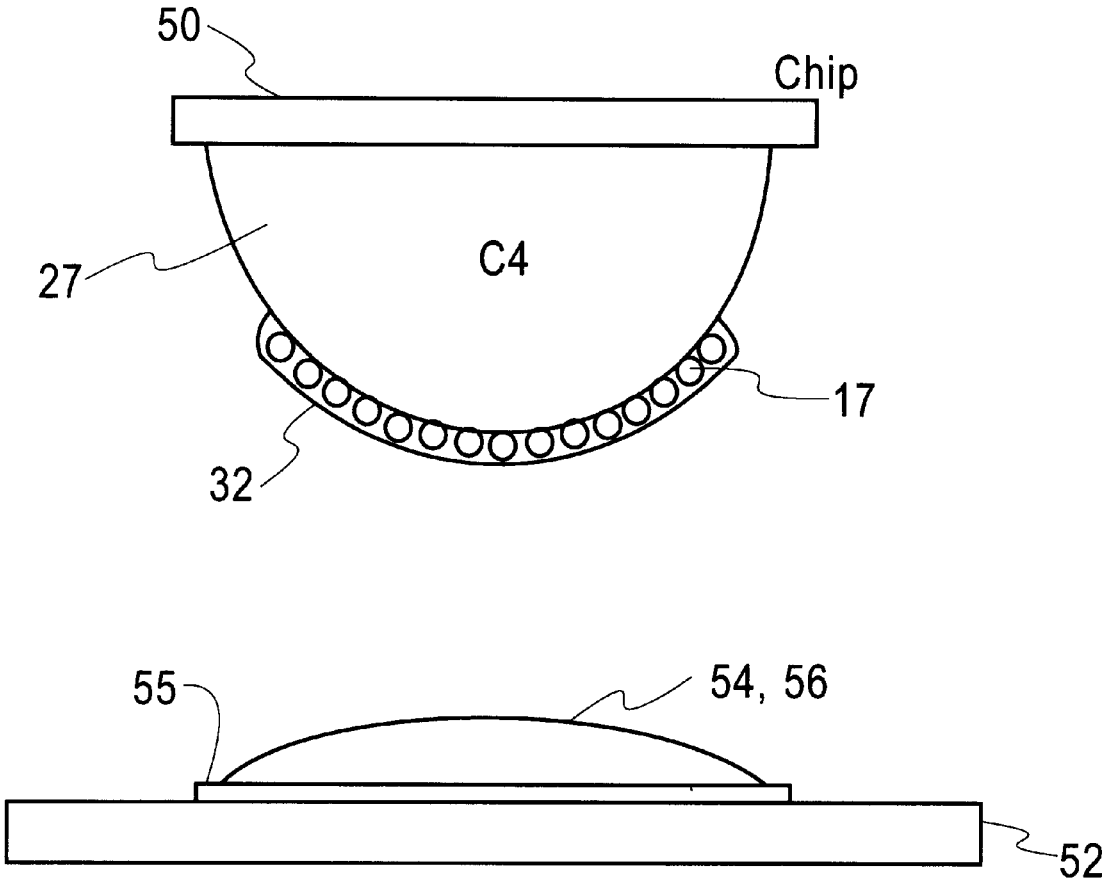

Fig. 8

ELECTRODE MODIFICATION USING AN UNZIPPABLE POLYMER PASTE

This is a division of application Ser. No. 08/965,227, filed Nov. 6, 1997, now U.S. Pat. No. 6,013,713.

FIELD OF THE INVENTION

This invention relates to a paste and more particularly to a paste including an unzippable polymer, solvent and conductive particles for coating electrodes such as C4 bumps with oxide free conductive particles for applications such as low temperature interconnections between an integrated circuit chip and a substrate made of polymer/filler composites, such as an FR4 printed circuit board.

BACKGROUND OF THE INVENTION

With more and more transistors being placed on a chip to increase the number of functions, the number of input/output (I/O) pads per integrated circuit chip has increased significantly. The increase in the number of I/O pads per chip are making traditional bonding methods, such as wire bonding (WB) and tape automated bonding (TAB) difficult. Flip chip attach (FCA), which is usually an area array in contrast to a peripheral array for WB and TAB, is becoming increasingly pervasive due to the number of pads. In FCA, the chip is bumped with a lead-rich Pb/Sn alloy ball using metal deposition through a resist-mask, for example. The bonding of this chip is achieved by self alignment and placing the chip on the substrate which has been covered with high viscosity flux to reduce oxides. The chip is held in place by the flux. The whole assembly (chip and substrate) is subsequently heated in the range from 350 to 400° C. to a temperature which melts the solder forming an interconnect between balls or bumps on a chip and respective pads on a substrate.

Conventionally the substrates were multi-layer ceramic (MLC) structures that could withstand temperatures up to 400° C. Dictated by both the number of pads and lower cost, there is a growing need to attach similar C4 bumped integrated circuit chips to organic substrates made of polymer/filler composites, such as FR4. Such organic substrates degrade at solder reflow temperatures above 300° C. Thus a low temperature joining material is needed to attach the C4 bumps of a chip to respective substrate pads.

One method to attach electrodes such as C4 bumped chips to an organic substrate is by capping the C4 bumps first with a low temperature melting Pb/Sn-eutectic solder such as described in U.S. Ser. No. 08/710,992 filed Sep. 25, 1996 by Berger et al. entitled "Method for Making Interconnect for Low Temperature Chip Attachment" (YO996073) and assigned to the assignee herein. The Pb/Sn solder cap over the C4 bump may be accomplished by vapor depositing the metal components through a resist mask, followed by solder reflow step. The masking process requires expensive alignment and lithographic steps, and the vapor deposition process is costly due to high vacuum processing. The bonding is accomplished by reflowing the Pb/Sn-eutectic solder at temperatures below 250° C. using acidic flux. Subsequently, the flux is removed using organic solvents that may be chloro-fluoro-carbon (CFC) based.

SUMMARY OF THE INVENTION

In accordance with the present invention, a paste is described comprising a solvent for an unzippable polymer, an unzippable polymer dissolved in the solvent to form a solution, and particles suspended in the solution. The particles may be suitable for coating the surface of a selected material; and the polymer may comprise 10 wt. % or greater of the solution.

The invention further provides a coating comprising a substrate and a layer of the paste mentioned above that leaves a layer of particles which may be heated to form an alloy with the substrate material.

The invention further provides a method for testing the integrated circuit chip with C4 bumps that are coated using the disclosed method. The particles in the paste being conductive and adherent to the C4 surface will provide a conductive path between the C4 bumps and conductive pads on the test probe.

The invention further provides a method for coating C4 electrodes or bumps on an integrated circuit chip comprising the steps of applying a paste mentioned above to the surface of the C4 electrodes, the particles in the paste being conductive and adherent to the surface of the substrate, and heating the paste to remove the solvent and the unzippable polymer wherein the particles may alloy with the Pb in the C4.

The invention provides a low cost C4 capping method.

The invention provides a method that does not require any lithography, alignment or vacuum processing steps.

The invention provides a bonding process that uses conductive adhesive on the substrate that does not require any flux, hence no cleaning step. The conductive adhesive may typically be a silver or gold filled epoxy.

The invention provides a bonding process using a conductive organic composite that allows for greater thermal mismatch between the chip and the substrate than a solid metal solder joint would.

The invention provides a bonding process that allows flip chip to pads on organic substrates where the mismatch in the thermal coefficient of expansion (TCE) is significantly larger than the TCE between an integrated circuit chip and a ceramic substrate.

The invention provides a testing process that would allow the C4 bumps to be tested by conventional methods of pressure contact before bonding.

BRIEF DESCRIPTION OF THE DRAWING

These and other features, objects, and advantages of the present invention will become apparent upon consideration of the following detailed description of the invention when read in conjunction with the drawing in which:

FIG. **1**A shows one embodiment of the invention.

FIG. **1**B shows an intermediate step in using the embodiment of FIG. **1**A.

FIG. **1**C shows the final result of using the embodiment of FIG. **1**A.

FIGS. **2**–**4** show a sequence of steps for placing a coating of unzippable paste on C4 bumps of an integrated circuit.

FIG. **5** is a SEM image of a C4 bump after a heating cycle having a metal coating as in FIG. **1**C.

FIG. **6** is a graph of data from Energy Dispersive X-ray Analysis of a gold coated site on the C4 bump after the coating process, and

FIG. **7** is a graph of data from Energy dispersive X-ray Analysis of an uncoated site of lead on the C4 bump in FIG. **6**.

FIG. **8** shows the final structure of a C4 bump coated with oxide free particles to be bonded to a paste bumped substrate.

DESCRIPTION OF THE PREFERRED EMBODIMENTS

Referring to FIG. **1**A, a substrate **10** and a coating of unzippable paste **13** is shown. Unzippable paste **13** com-

prises an unzippable polymer **15** and/or their blends dissolved in solvent **18**, particles **17** such as oxide-free metal. An oxide-free metal or surface is one that does not form an oxide layer to permit a conductivity greater than 1 ohm-cm or the oxide layer is conducting with a conductivity greater than 1 ohm-cm. For example, C4 bumps of an alloy of 97 wt. % Pb and 3 wt. % Sn typically have an oxide coating or layer which provides a contact resistance which is greater than 1 ohm-cm without reflow of the solder in the C4 bump. Unzippable polymer **15** is a polymer that completely volatilizes above a certain temperature defined as the unzipping temperature, T_{unzip}. Some examples of unzippable polymers **15** include poly(methyl methacrylate) (PMMA), poly(α-methyl styrene) (PAMS), poly(propylene carbonate), poly (ethylene carbonate), and poly(chloral). All these polymers have a T_{unzip} below 400° C.

Solvent **18** is one that may be organic and dissolves the above mentioned polymers. For example, N-methyl pyrrolidinone (NMP) is a good solvent for PMMA and PAMS.

Particles **17** may be composed of one or more metals. At least one of the metal components should form an alloy with Pb or Sn wherein the alloy melts in the temperature range from 150 to 400° C. For example, particle **17** may be Au, Sn, or Au/Sn alloy. The particle should be oxide free or with an oxide that is conductive. The particles could also be made of composite material where the inner core may be ceramic or metal and the outer layer is an oxide free metal or a conductive oxide. Particles in the paste may be in the range from 1 to 50 volumetric %.

Solvent **18** in paste **13** is removed by drying at T_{dry} under a selected environment, leaving polymer **15** and particles **17** on the surface of substrate **10**. The temperature is then raised above the unzipping temperature T_{unzip} of unzippable polymer **15** which results in the degradation and evaporation of the polymer components.

FIG. **1**C shows the final structure of substrate **10** coated with particles **17** after unzipping. The T_{dry} is more than 50° C. below the T_{unzip}. The selected environment may be air, N_2, vacuum, forming gas, Ar, He or a combination thereof. Coating **12** may be patterned or uniform over substrate **10**. Selective coating **12** may be achieved by a standard dispensing process such as screening, stenciling, etc. Particles **17** shown in FIG. **1**C may be in a monolayer or multilayer. Particles **17** may form an interconnected percolating structure or discrete islands.

FIGS. **2**–**4** show steps for coating C4 bumps of an integrated circuit with unzippable paste **13**. Unzippable paste **13** is screened on a smooth, clean surface of a solid substrate **22** through an interposer **24**. Substrate **22** may be glass, silicon or ceramic. Interposer **24** may comprise polyimide, polyester or other organic material or metal such as molybdenum, nickel, stainless steel, etc. Interposer **24** may have a plurality of openings or vias **26** which are slightly larger than the diameter of the C4 bumps **27** to be coated. The thickness of interposer **24** is less than the height of the C4 bump **27**. Typically, the diameter of C4 bump **27** is 75 μm. The diameter of opening **26** may be in the range from 85 to 100 μm and the thickness of interposer **24** may be 50 μm. FIG. **2** shows openings **26** filled with unzippable paste **13**. Interposer **24** can be made by chemical etch, laser ablation or other conventional means to match the pattern of C4 bumps on a chip or wafer.

Some other method of transferring the unzippable paste **13** to C4 bumps **27** may be by pin transfer, dipping, brushing, etc.

Substrate **22** is then placed over or under a chip or wafer **34** of undiced or embedded chips having a plurality of C4 bumps **27** thereon. Openings **26** filled with unzippable paste **13** are aligned with corresponding bumps **27** on wafer **34**. The alignment is done by self aligning the chip with the vias **26** in interposer **24**. Substrate **22** is brought closer to chip or wafer **34** so that C4 bumps **27** are pressed into openings **26** and in contact with unzippable paste **13** as shown in FIG. **3**. Substrate **22** is then separated from or moved away from chip or wafer **34** so that C4 bumps **27** are separated from contact with unzippable paste **13** in openings **26**. A thin layer **29** of unzippable paste **13** adheres to C4 bumps **27** as the chip or wafer **34** is removed from proximity of substrate **22** as shown in FIG. **4**. In this example, the geometry of each C4 is well defined dimensionally and by composition,the contact area to unzippable paste **13** is nominally identical for each bump. As a result, the thickness and size of the paste film forming thin layer **29** on the C4 bumps **27** are nominally of the same thickness. The thickness of thin layer **29** may be in the range from 0.1 to 50 μm with a thickness variation in the range from 0.05 to 25 μm. The process can be repeated a number of times by heating to T_{dry} to increase the amount of particles adhering to the C4 bumps.

Thin layer **29** is first dried by heating to T_{dry}, then heated above T_{unzip} and the melting temperature of the solder metals in the C4 bumps **27**. The particles embed into the molten C4 or react with solder metal, to form a strong bond between the particle and the C4. The particles adhere to the C4 bump by a mechanism of alloying, softening, interdiffusion and/or interlocking.

Depending upon the particular unzippable polymer, metal, alloy, or other material selected. T_{unzip} may be above or below the melting temperature T_{melt} of the metal, alloy or other material. Where T_{unzip} is above T_{melt} heating may be above T_{unzip} in one step. Where T_{unzip} is below T_{melt}, heating may first be above T_{unzip} and below T_{melt} and then raised above T_{melt}.

Best practice is to completely remove the unzippable polymer prior to raising the temperature to T_{melt} or above.

Heating is done typically in an oven or zone furnace with a nitrogen or preferably forming gas environment. During this thermal cycle, the unzippable paste **13** unzips and vaporizes and the metal filler particles **17** fuse with respective C4 bumps forming an oxide-free conductive coating **32** on C4 bumps **27**.

FIG. **5** shows an image of conductive coating **32** on a C4 bump **27** taken by Scanning Electron Microscopy (SEM). The image in FIG. **5** was taken after the heating cycle was completed at 360° C. for 30 mins. in a forming gas environment. Conductive coating **32** as shown in FIG. **5** is a uniform layer or coating of particles **17** which are Au.

FIG. **6** is a graph of Energy Dispersive X-ray Analysis of a site on conductive coating **32** on the C4 bump **27** shown in FIG. **5**. In FIG. **6** the ordinate represents X-ray intensity and the abscissa represents energy in keV. Curve **42** shows the X-ray intensity as a function of energy from 0 to 20 keV. Peak **44** shows that the top surface of conductive coating **32** is Au with very small traces of Pb. Curve **44** illustrates that conductive coating **32** has a high coverage of gold over C4 bump **27**.

FIG. **7** is a graph of Energy Dispersive X-ray Analysis of a site on C4 bump **27** without conductive coating **32**. FIG. **7** is formed from data obtained from the C4 bump **27** shown in FIG. **5**. In FIG. **7**, the ordinate represents X-ray intensity and the abscissa represents energy in keV. Curve **46** shows the X-ray intensity as a function of energy from 0 to 20 keV. Peak **48** shows that the surface of C4 bump **27** is Pb.

A process for bonding chips **50** to a substrate **52** is now described. The chips **50** to be bonded would be processed to form, as described above, a layer **32** of particles **17** on its C4 bumps **27**. A conductive adhesive paste **54** comprising a polymer binder and noble metal particles would be placed on electrical pads **55** on substrate **52**. The polymer binder

may be a thermoplastic or thermoset polymer. The paste may also contain a solvent system that dissolves the polymer binder. Chip **50**, after C4 bumps **27** are processed to contain a Au layer **32**, is bonded to paste **54** or paste bump **56** on substrate **52** by a method shown in FIG. **8**. An example of a conductive paste suitable for use herein is described in U.S. Pat. No. 5,086,558 by Grube et al. which issued Feb. 11, 1992 and in U.S. Ser. No. 08/734,492 by R. Booth et al. filed Oct. 21, 1996, both of which are incorporated herein by reference. Typically if paste **54** is epoxy based, chip **50** is bonded by heating the assembly in a temperature range from 150 to 250° C. with 0 to 100 psi pressure. If paste **54** is thermoplastic, the temperature range is the same but the pressure can range from 10 to 100 psi. The attached chip **50** is then underfilled by an encapsulant to form a typical finished assembly.

A process of testing the chip is now described. The C4 bumps of the chip to be tested would be coated with layer **32** by a process described above. The C4 bumps are electrically connected to the pads of the test probe by either physical contact using force or bonding using the thermoplastic paste method described above. For both methods, the contact pads of the test probe are oxide free.

C4 bumped chips are needed to be attached to FR4 or other organic substates. Such assemblies will be used in computers, office equipment, automobiles and trucks, control systems, cellular phones, etc.

While there has been described and illustrated a process for forming a metal coating on a structure such as capping C4 bumps with Au to provide an oxide free surface on C4 bumps on an integrated circuit chip, it will be apparent to those skilled in the art that modifications and variations are possible without deviating from the broad scope of the invention which shall be limited solely by the scope of the claims appended hereto.

Having thus described our invention, what we claim as new and desire to secure by Letters Patent is:

1. A coating on a C4 bump comprising:

a C4 bump,

a layer of paste on said C4 bump,

said paste including:

a solvent for an unzippable polymer,

an unzippable polymer dissolved in said solvent to form a solution, and

particles suspended in said solution,

said particles suitable for coating the surface of said C4 bump,

said unzippable polymer comprising 10 wt % or greater of said solution.

2. The coating of claim **1** wherein said C4 bump has a surface containing lead,

said unzippable polymer vaporizes completely above a first temperature, and

wherein said particles adhere to said surface of said C4 bump upon contact.

3. The coating of claim **2** wherein said solvent and unzippable polymer are removed by raising the temperature of said solvent above a second temperature and said unzippable polymer above said first temperature.

4. The coating of claim **2** wherein said particles adhere to said C4 bump by a mechanism selected from the group consisting of alloying, softening, interdiffusion, and interlocking.

5. The coating of claim **1** wherein said particles include a metal selected from the group consisting of Au, Sn and Au/Sn alloy.

6. A method for coating electrodes on a semiconductor chip with metal particles comprising the steps of:

applying a paste to the surface of said electrodes,

said paste comprising:

a solvent for an unzippable polymer,

an unzippable polymer dissolved in said solvent to form a solution, and

particles suspended in said solution,

said particles suitable for coating said the surface of said electrodes,

said unzippable polymer comprising 10 wt % or greater of said solution,

said particles in said paste being conductive and adherent to the surface of said electrodes, and

heating said paste to remove said solvent and said unzippable polymer.

* * * * *