University of Nebraska - Lincoln
DigitalCommons@University of Nebraska - Lincoln

Patents Held by Members of the Department of Chemical and Biomolecular Engineering

Chemical and Biomolecular Engineering Research and Publications

4-22-2001

Ultra High Density Storage Media and Method Thereof

Ravi Saraf
University of Nebraska-Lincoln, rsaraf2@unl.edu

Follow this and additional works at: http://digitalcommons.unl.edu/chemengpatent

Part of the Chemical Engineering Commons

Saraf, Ravi, "Ultra High Density Storage Media and Method Thereof" (2001). *Patents Held by Members of the Department of Chemical and Biomolecular Engineering.* Paper 60.
http://digitalcommons.unl.edu/chemengpatent/60

This Article is brought to you for free and open access by the Chemical and Biomolecular Engineering Research and Publications at DigitalCommons@University of Nebraska - Lincoln. It has been accepted for inclusion in Patents Held by Members of the Department of Chemical and Biomolecular Engineering by an authorized administrator of DigitalCommons@University of Nebraska - Lincoln.

US006236589B1

(12) **United States Patent**
Gupta et al.

(10) **Patent No.: US 6,236,589 B1**
(45) **Date of Patent: May 22, 2001**

(54) **ULTRA HIGH DENSITY STORAGE MEDIA AND METHOD THEREOF**

(75) Inventors: **Arunava Gupta**, Valley Cottage; **Ravi Saraf**, Briarcliff Manor, both of NY (US)

(73) Assignee: **International Business Machines Corporation**, Armonk, NY (US)

(*) Notice: Subject to any disclaimer, the term of this patent is extended or adjusted under 35 U.S.C. 154(b) by 0 days.

(21) Appl. No.: **09/320,611**

(22) Filed: **May 26, 1999**

Related U.S. Application Data

(62) Division of application No. 08/960,693, filed on Oct. 29, 1997, now Pat. No. 6,017,618.

(51) **Int. Cl.**[7] **G11C 11/00**
(52) **U.S. Cl.** **365/151**; 365/106
(58) **Field of Search** 365/151, 106; 428/321.1, 19, 64

(56) **References Cited**

U.S. PATENT DOCUMENTS

4,981,743 * 1/1991 Ho 428/64
5,301,145 * 4/1994 Inoue et al. 365/106
5,557,596 * 9/1996 Gibson et al. 365/151

* cited by examiner

Primary Examiner—Son T. Dinh
(74) *Attorney, Agent, or Firm*—Scully, Scott, Murphy & Presser; Robert M. Trepp, Esq.

(57) **ABSTRACT**

A storage media for storing information having a substrate. The substrate has an upper surface and a molecular weight greater than 5,000. Preferably the material is a polymer. The material has a plurality of piles of molecular chains in selected areas formed by pushing the molecular chains of the material on its upper surface to the selected area mechanically with a mechanical tool. The piles represent written information. The mechanical tool is preferably an atomic force microscope. Another aspect of the present invention is a method for storing information having the steps of selecting a material substrate having an upper surface and pushing molecules on the upper surface into a molecular pile at selected locations.

6 Claims, 10 Drawing Sheets

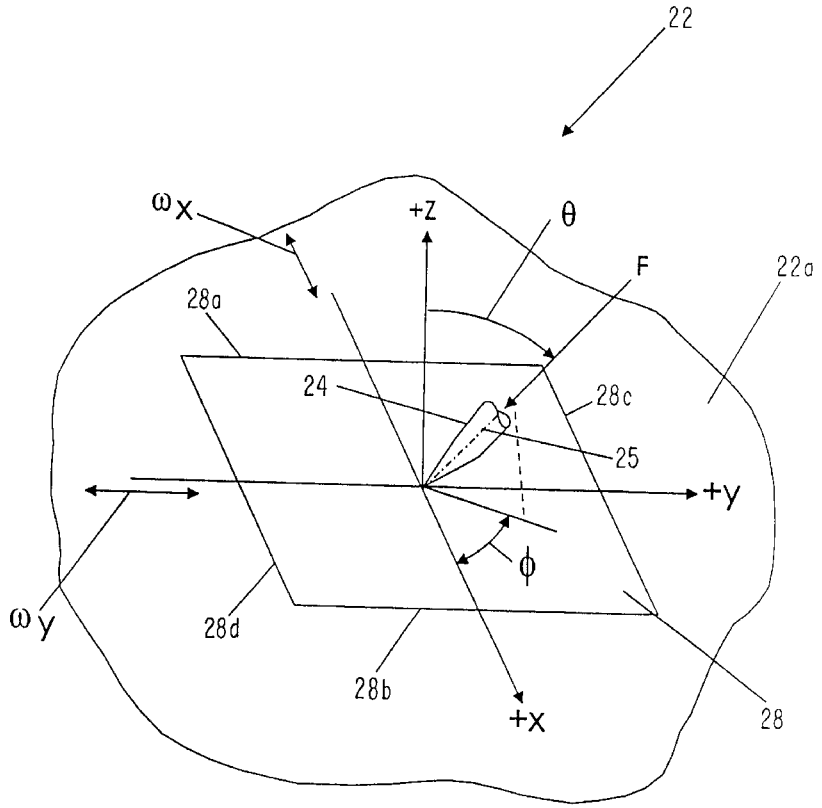

FIG. 1A

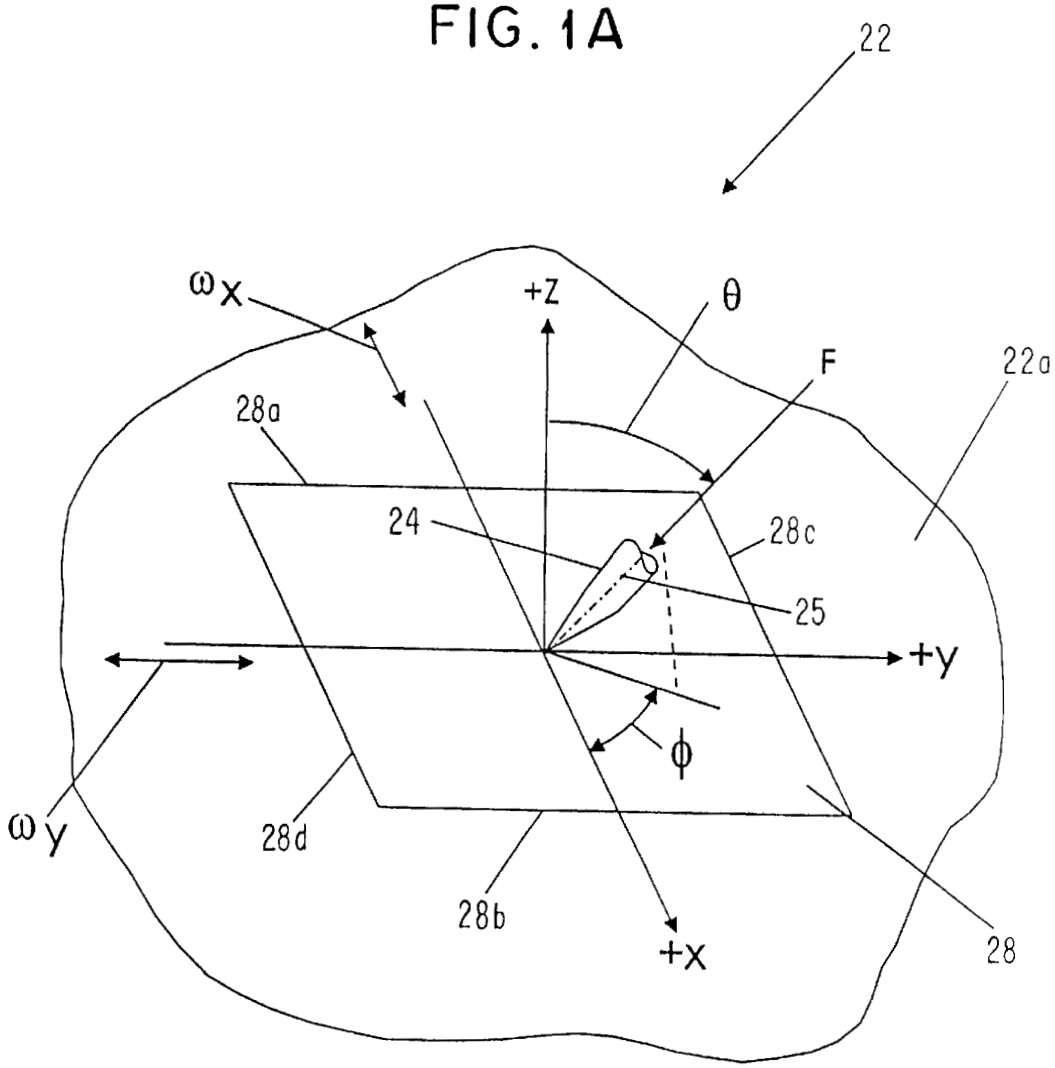

FIG. 1B

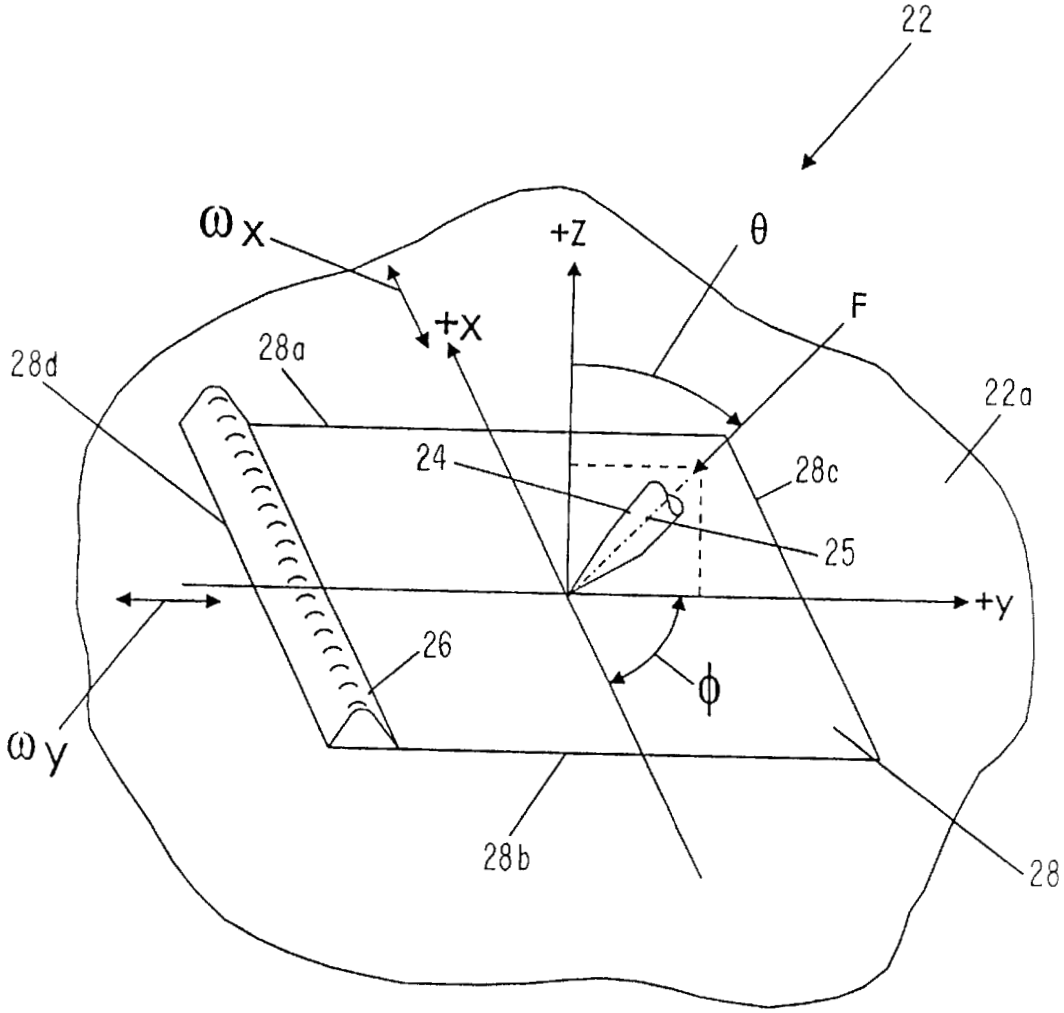

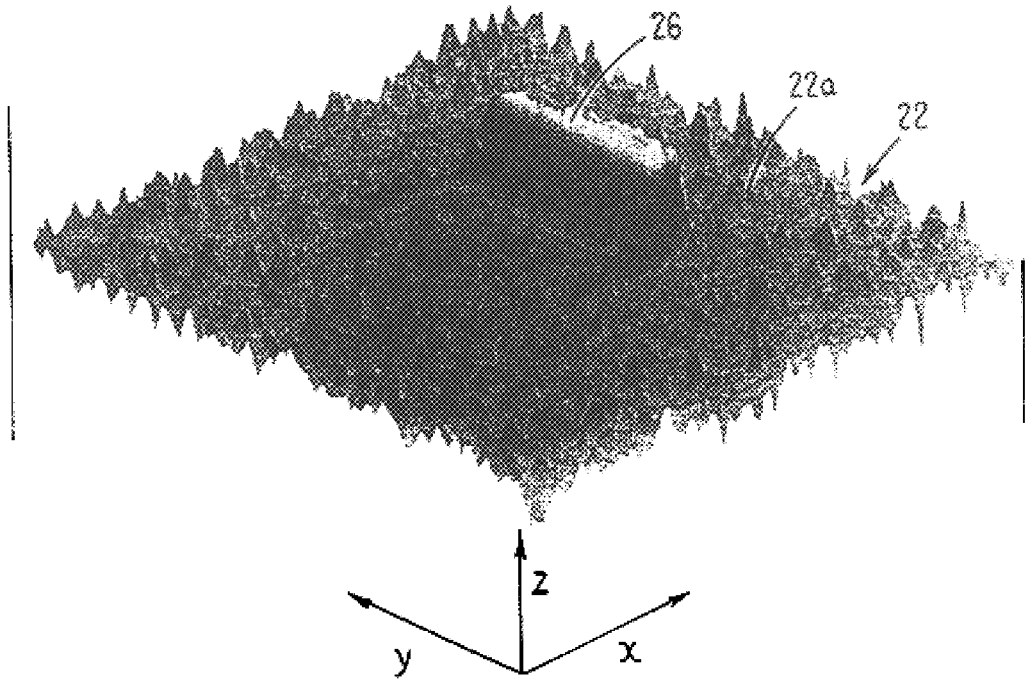

FIG. 2

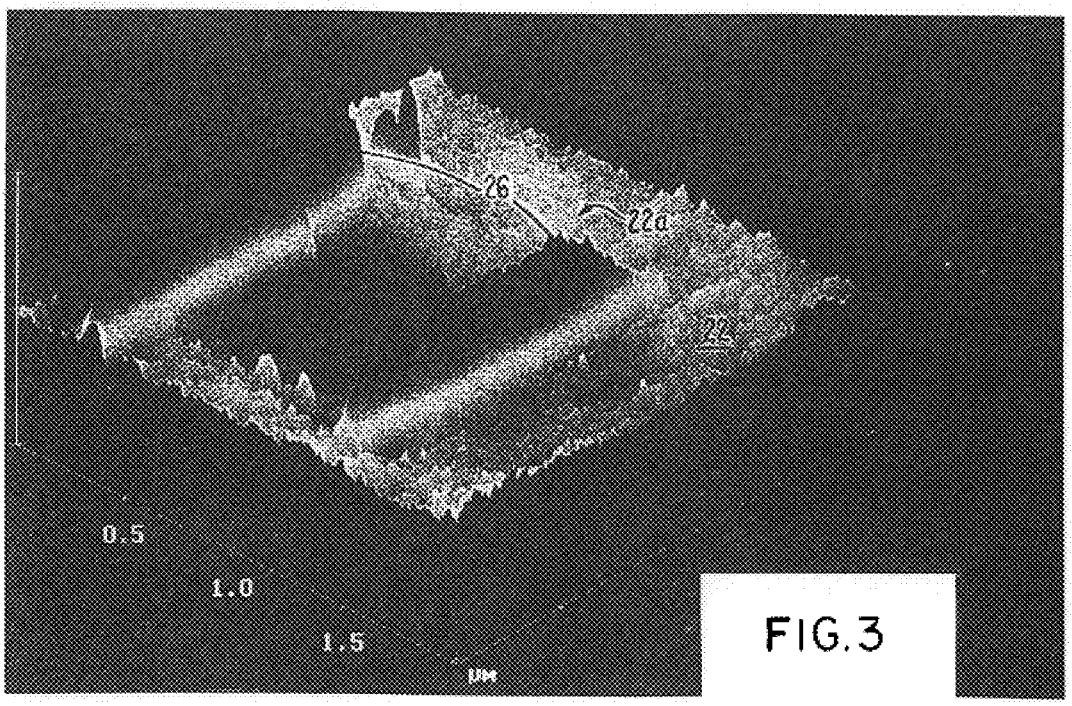

FIG. 3

FIG. 4A

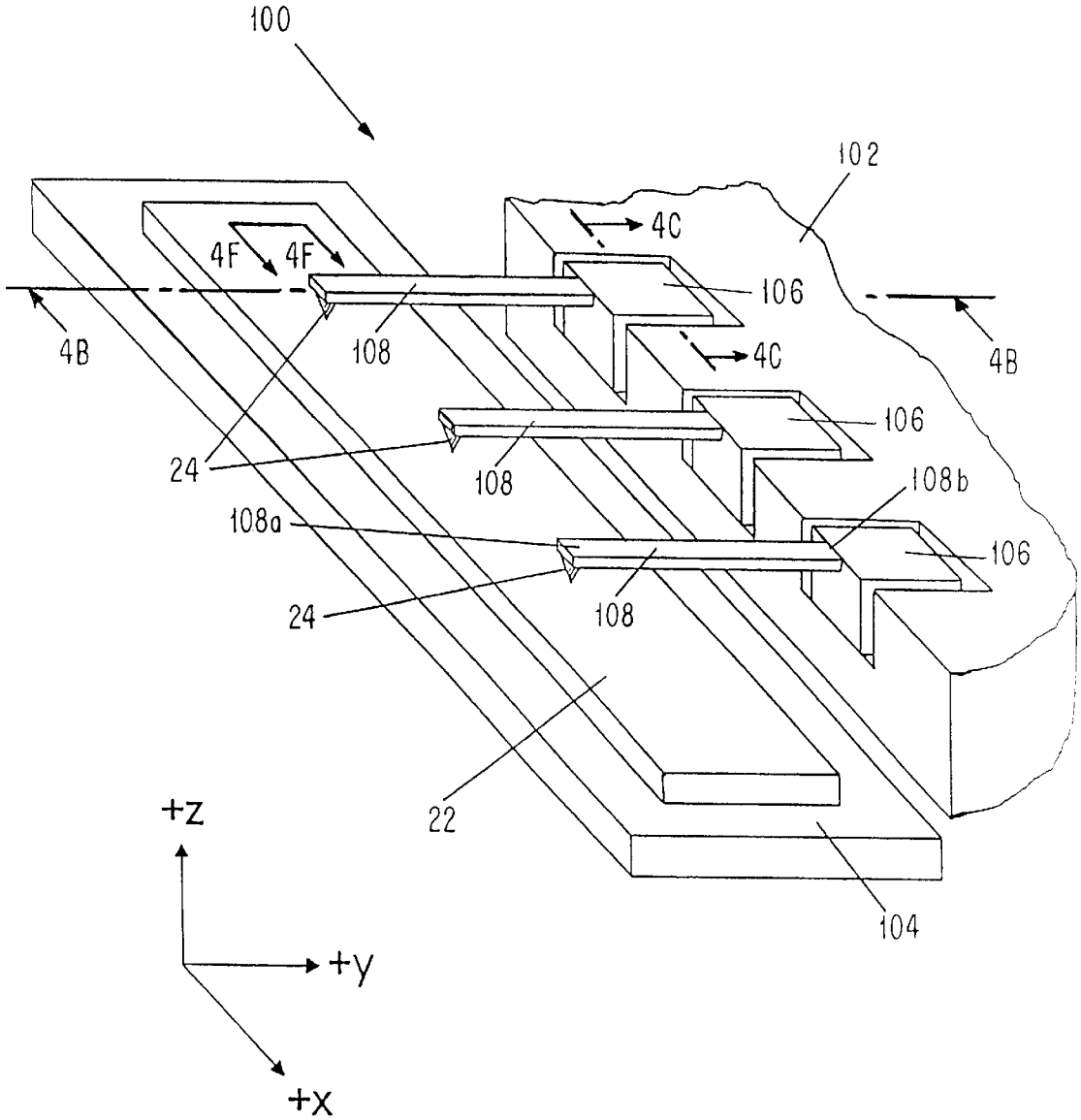
100
102
4C
4F
4F
106
4B
108
4C
4B
106
24
108
108b
108a
106
24
108
22
+z
104
+y
+x

FIG. 4B

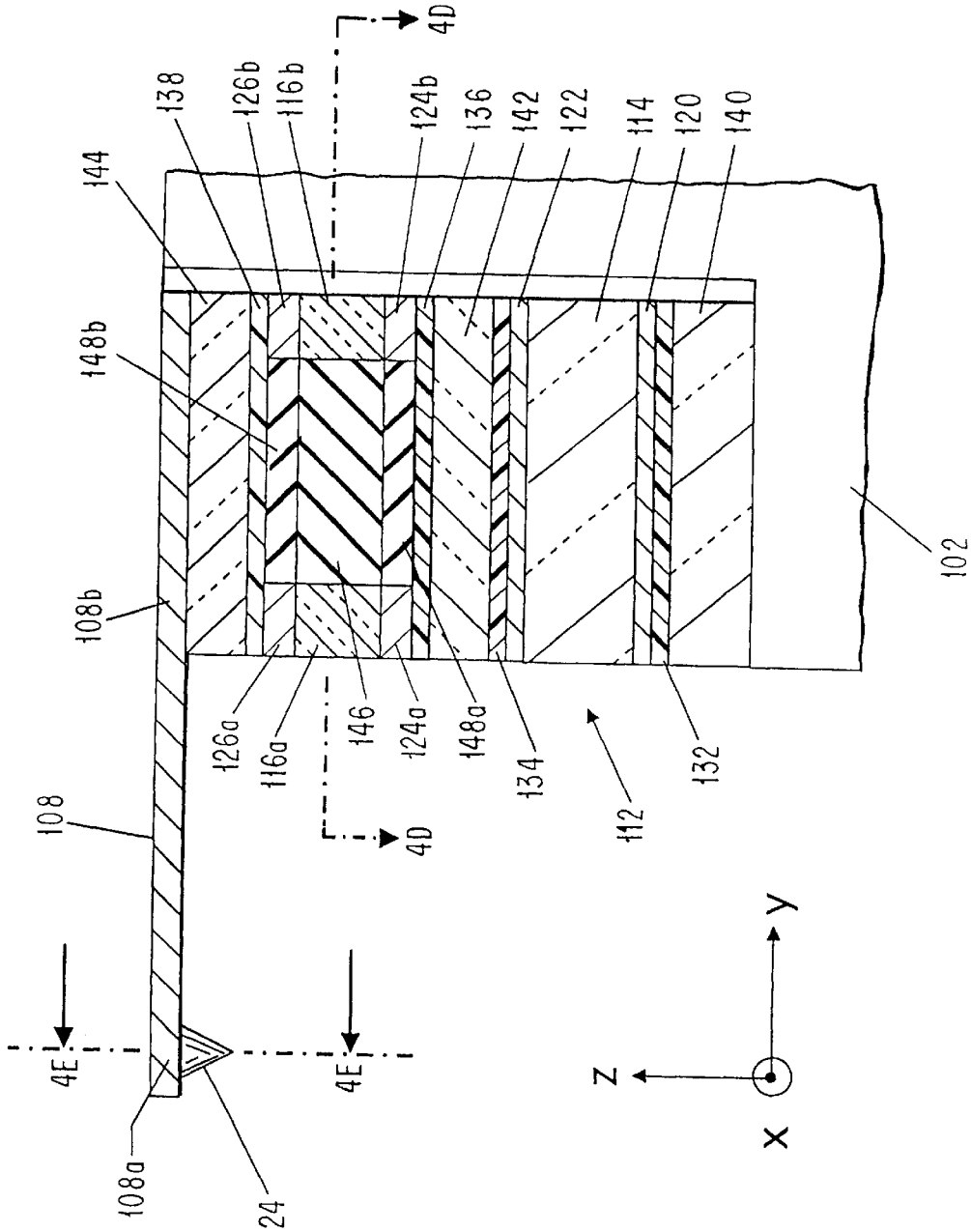
4D
138
126b
116b
124b
136
142
122
114
120
140
144
148b
108b
102
126a
116a
146
124a
148a
134
132
112
108
4D
4E
4E
108a
24
Z
Y
X

FIG. 4C

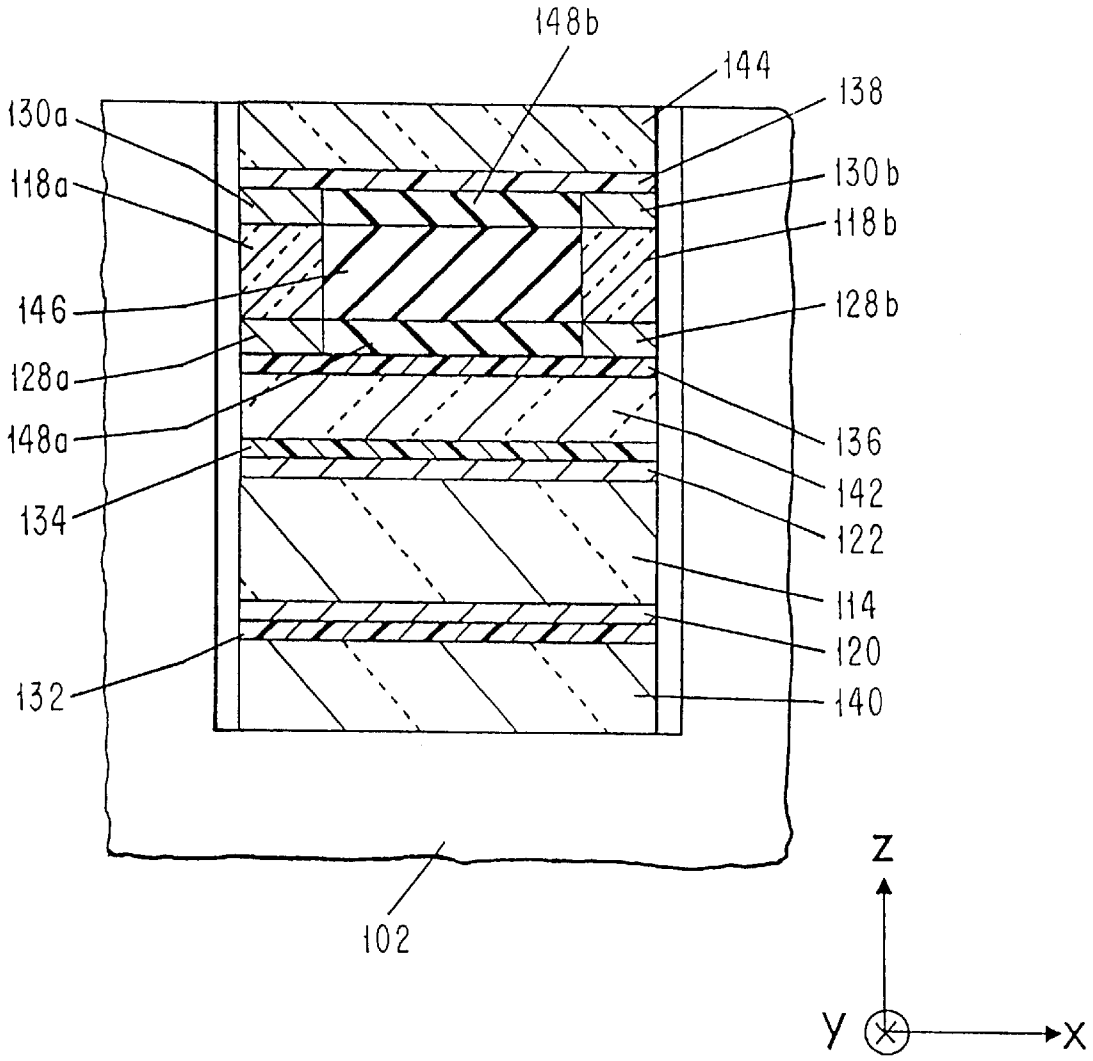
148b
144
138
130a
130b
118a
118b
146
128b
128a
148a
136
142
134
122
114
120
132
140
102
Z
Y
X

FIG. 4D

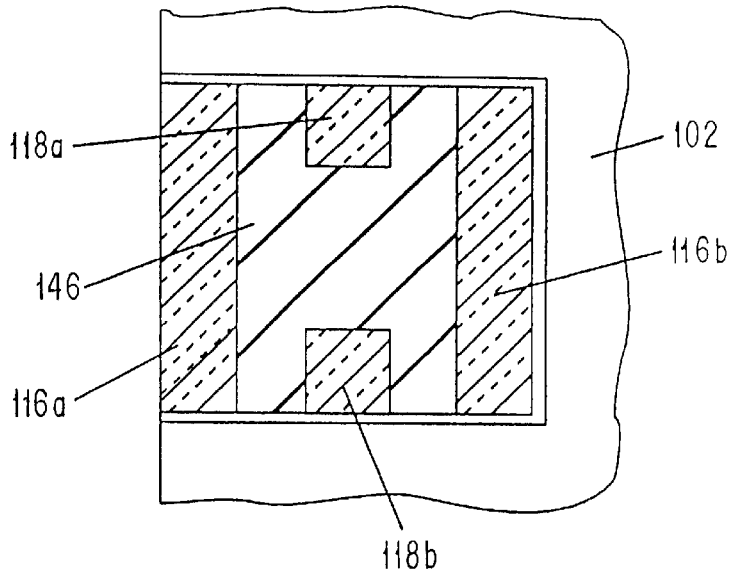

FIG. 4E

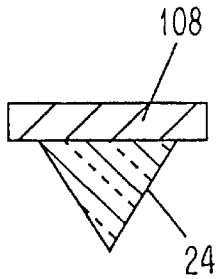

FIG. 4F

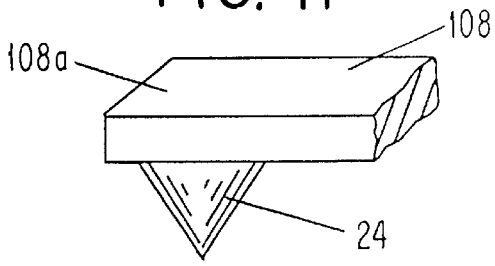

FIG. 4G

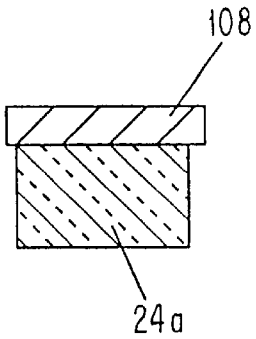

FIG. 4H

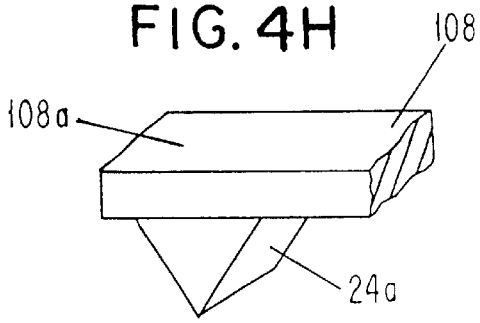

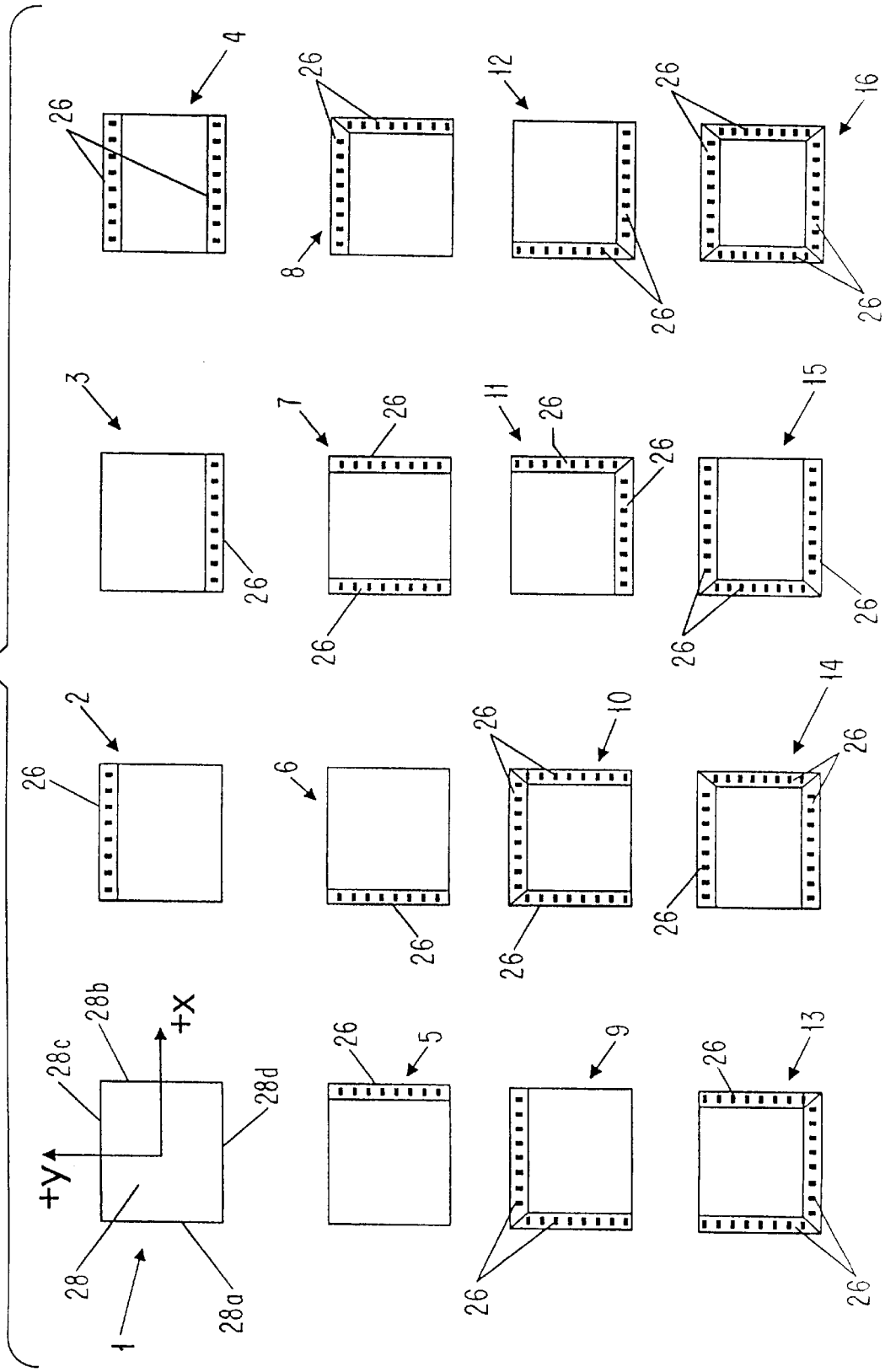
FIG.5
1
2
3
4
5
6
7
8
9
10
11
12
13
14
15
16
26
28
28a
28b
28c
28d
+X
+Y

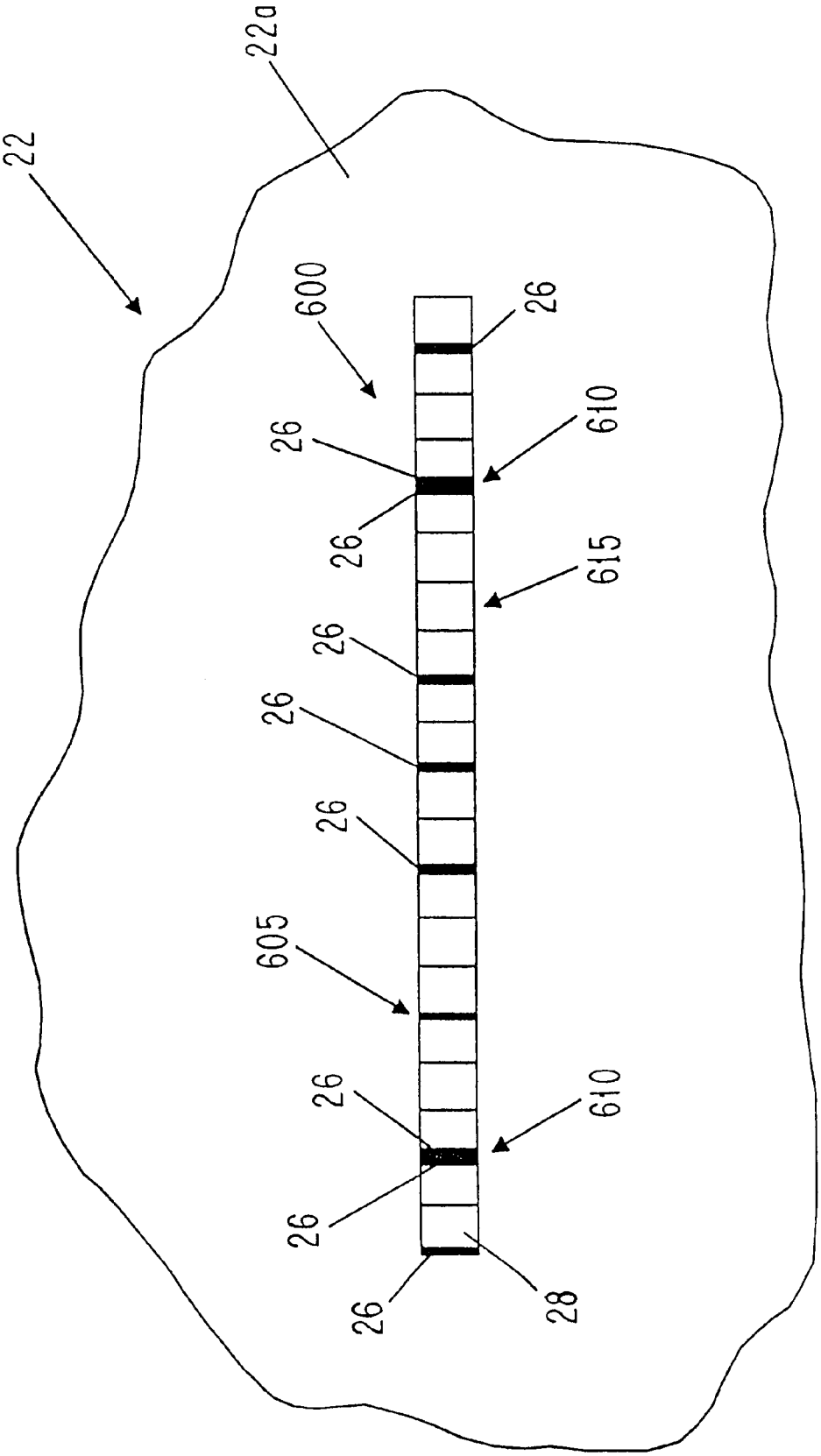

FIG. 6

ULTRA HIGH DENSITY STORAGE MEDIA AND METHOD THEREOF

CROSS REFERENCE TO RELATED APPLICATION

The present application is a divisional of application Ser. No. 08/960,693 filed Oct. 29, 1997, now U.S. Pat. No. 6,017,618.

RELATED APPLICATIONS

U.S. application Ser. No. 08/960,694, entitled "MICRO GONIOMETER FOR SCANNING PROBE MICROSCOPY," filed on even date herewith for Ravi Saraf and Arunava Gupta is incorporated herein by reference.

BACKGROUND OF THE INVENTION

1. Field of the Invention

The field of art to which this invention relates is ultra high density disk storage. Specifically, this invention relates to a method for writing data to a material by manipulating long chain molecules on the material's surface.

2. Description of the Related Art

With the advent of scanning tunneling microscopes (STM) in the early 1980's, several methods have been developed to use the small scale processing capability of the STM for high density data storage. In these methods, atoms are manipulated to form bumps on a media surface, the bump forms a bit of information which is represented in a base two (binary) format (i.e., as a 1 or a 0). An example of such a use is disclosed in U.S. Pat. No. 5,327,625 to Clark et al. Although these methods have their advantages, such as high storage density, they are plagued by several disadvantages.

The main disadvantage of STM data storage is that the speed of writing and replication is prohibitively slow. Conventional magnetic and CD-ROM recording rates are approximately 10^8 and 1.5×10^6 bits/second respectively, while STM atom writing is less than 1 bit/second.

Additionally, writing at the atomic level is usually performed at very cold temperatures and in a vacuum. The equipment used to perform atomic scale writing is therefore very sophisticated and expensive. There are also disadvantages in reading the information written at the atomic level. Atomic scale resolution of the media surface is necessary to read the data. This also requires sophisticated and expensive equipment.

Lastly, the scanning probe processes of the prior art need to write onto single crystal surfaces. Materials of this type are expensive and greatly limit the process by requiring materials of this class.

For the above reasons, there is a need in the art for a high density method of writing to the surface of a material which does not suffer from the drawbacks associated with manipulation of atoms on that surface.

SUMMARY OF THE INVENTION

Therefore, it is an object of the present invention to provide a method for ultra high density media storage which can be performed at rates comparable with those associated with conventional magnetic and CD-ROM recording rates.

Another object of the present invention is to provide a method for ultra high density media storage in which writing to the media is performed at room temperature and atmospheric pressure.

Yet another object of the present invention is to provide a method for ultra high density media storage in which reading of the data is accomplished with conventional inexpensive equipment.

Yet another object of the present invention is to provide a method for writing to a substrate surface with a scanning probe microscope in greater than base two writing.

Yet another object of the present invention is to provide a method for ultra high density media storage in which inexpensive substrate materials are used.

Yet still another object of the present invention is to provide a method for ultra high density media storage in which surface features are created where the shape of the feature is controlled. Accordingly, a storage media for storing information is disclosed. The storage media comprises a substrate having a material with a molecular weight greater than 5,000 on its upper surface, preferably the material is a polymer. The material has a plurality of piles of molecular chains in selected areas formed by pushing molecular chains of the polymer on the surface to the selected area mechanically with a mechanical tool whereby information is written therein. The mechanical tool is preferably an atomic force microscope (AFM).

Also disclosed is a molecular bar-code comprising a substrate having a material with a molecular weight greater than 5,000 on its upper surface. The material has a plurality of piles of molecular chains in selected areas forming a series of parallel lines. The piles are formed by pushing molecular chains of the material on the surface to the selected areas with a mechanical tool whereby information is written on the substrate.

Another aspect of the present invention are methods for storing information comprising the steps of selecting a material substrate having an upper surface and pushing long chain molecules on said upper surface into a molecular pile at selected locations.

BRIEF DESCRIPTION OF THE DRAWINGS

These and other features, aspects, and advantages of the apparatus and methods of the present invention will become better understood with regard to the following description, appended claims, and accompanying drawings where:

FIG. **1**A illustrates an isometric view of an AFM tip operating on a pixel of media surface;

FIG. **1**B illustrates the AFM of FIG. **1**A in which a molecular pile is formed on the negative y axis of the surface pixel;

FIG. **2** illustrates a photograph of a molecular pile on a polyimide surface;

FIG. **3** illustrates a photograph of two molecular piles formed on both sides of the AFM tip;

FIG. **4**A illustrates a substrate plate having multiple goniometer tips;

FIG. **4**B illustrates a sectional view of the goniometer of FIG. **4**A as taken along line **4**B—**4**B;

FIG. **4**C illustrates a sectional view of the goniometer of FIG. **4**A as taken along line **4**C—**4**C;

FIG. **4**D illustrates a sectional view of the goniometer of FIG. **4**B as taken along line **4**D—**4**D;

FIG. **4**E illustrates a sectional view of the goniometer tip of FIG. **4**B as taken along line **4**E—**4**E;

FIG. **4**F illustrates a partial enlarged isometric view of the goniometer tip of FIG. **4**A as viewed along line **4**F—**4**F;

FIGS. **4**G and **4**H illustrate views of an alternate tip as they would be illustrated in FIGS. **4**E and **4**F, respectively;

FIG. **5** illustrates a chart showing the sixteen bit pile combinations achievable with the present invention; and

FIG. **6** illustrates a molecular bar-code disposed on the surface of a silicon wafer chip.

DETAILED DESCRIPTION OF THE PREFERRED EMBODIMENTS

An STM can be used to move atoms or molecules around on an electrically conductive surface (i.e., substrate) by moving the tip of the STM to a position adjacent to the atom or molecule to be moved and subsequently increasing the attraction between the tip and the atom or molecule by moving the tip closer to the surface. Then, while the atom or molecule remains bound to the tip and to the surface of the substrate, the tip can be moved laterally to drag the atom or molecule to a desired position on the substrate surface. The tip can then be moved away from the surface, reducing the attraction between the atom or molecule and tip, and leaving the atom or molecule bound at the desired position. However, the speed of this process is limited.

The speed of thermo-mechanical AFM (a good discussion of which is found at H. J. Mamin, D. Ruger, *Access: Selected Topics in Storage Technology*, Volume VII, Number 1, P. 1, 1993) can reach close to the 10^6 bits/second range. In thermo-mechanical AFM, the writing is done by locally damaging the surface of a dielectric film by rapidly heating and cooling the AFM tip. In the present invention, a writing technique using AFM is disclosed where the tip is not used to damage the substrate surface, but to alter its topography. Furthermore, the surface modification leads to base sixteen writing in contrast to base two writing which is typical of thermo-mechanical AFM.

Referring now to FIGS. **1**A and **1**B, the basic method for writing involves pushing long chain molecules of a substrate material **22** with an AFM tip **24** and accumulating the long chain molecules to form one or more molecular piles **26**. The height of the pile **26** depends upon the amount of material pushed and is related to the area swept by the tip **24**, the dynamical properties of the long chain molecules, and the processing conditions (i.e., normal force of the tip, the tip angle, and the speed of sweeping). To avoid any dissipation of pile **26** , a material must be chosen with molecules that are "frozen" at the writing temperature (T_w), the writing temperature is the temperature at which the substrate is written to.

The glass transition temperature (T_g) is a second order transition where there is a discontinuous change in coefficient of thermal expansion and specific heat. In practical terms, it is the temperature where a glassy phase of the material softens. Therefore, for amorphous polymers, at temperatures above the glass transition temperature (T_g) the material will be significantly soft such that the piles **26** can be "leveled" (i.e., erased) in some predetermined time. Below the T_g, the molecular chains are "frozen" and the piles **26** will not dissipate.

Preferably, a polymer is used as the substrate material. Two types of polymer substrates can be used, amorphous polymers and semicrystalline polymers. A semi-crystalline polymer's melting point temperature (T_m) is defined as the temperature at which a semi-crystalline polymer melts. The storage temperature of a polymer substrate (T_s), is the temperature at which a polymer is stored after writing, and at which the piles will not dissipate.

For an amorphous polymer, the writing temperature (T_w) should be below a temperature 100° C. higher than the glass transition temperature (T_g+100° C.), and preferably below the glass transition temperature (T_g) to keep the pile from dissipating once it is formed. Similarly, the storage temperature (T_s) should be below the glass transition temperature (T_g) so that the piles will not be erased during normal use and storage.

For a semicrystalline polymer, the writing temperature (T_w) and the storage temperature (T_s) should be below the melting point temperature (T_m) other wise the pile formed during writing will collapse. When the material has a glass transition temperature (T_g) below the writing temperature the writing can be done faster because it is easier to move the molecular chains. Examples of such materials are semi-crystalline polymers such as polyolefins which include polyethylene, polypropylene and other polymers such as polytetrafloroethylene. In these molecular systems, the piles **26** will remain stable after writing because the polymer is crystalline at the writing temperature.

When the material has a glass transition temperature (T_g) which is above the writing temperature the chains can still be moved as discussed below. Here the pile **26** will be stable because they are "frozen". Examples of such materials are polymers such as polyimide, polyether, polyether ketone, polycarbonates, polystyrene, polymethyl, and polymethacrylate.

Since the typical size (i.e., radius of gyration) of a polymer coil is ~10–20 nm, an AFM is suitable to manipulate their molecules. Preferably, polyimide is used because in addition to the benefits discussed above, it also has a long life due to its resilience against corrosion, microbe attack and humidity, similar to that of diamond-like films. Additionally, polyimide can be easily processed into a very smooth film. However, any material having a molecular weight greater than 5,000 can be used as the substrate.

Additionally, photosensitive polymers can be used as the substrate. These are polymers which cross link or polymerize when exposed to electromagnetic radiation from the Infrared to the x-ray range. After writing on the surface of a photosensitive substrate, the material is cross linked, which means that the data written (i.e., the piles) will not move, or dissipate. Since the cross linking "gels" the piles on the substrate surface, the writing temperature (T_w) and storage temperature (T_s) can be above or below the glass transition temperature (T_g). Examples of photosensitive polymers are certain polyimides and certain epoxies. Cross linking can be achieved by methods known in the art, such as by light, chemically or thermally.

Another desirable characteristic of a material to be utilized in the present invention is a favorable orientation function. Orientation function is a parameter quantifying the extent of orientation of its molecular chains. The parameter ranges from 0 to 1. At 0, the chains are randomly oriented, and as a result the material is isotopic. At 1, the chains are perfectly oriented along an axis. It is preferable to use a material where the chains will be slightly oriented in the molecular pile **26**. A slightly oriented material leads to higher contrast when a polarized light is used, which is an advantage when reading the pile data, however this is not a necessary condition. Preferably the orientation function is in the range of 0.3 to 1.

Referring again to FIGS. **1**A and **1**B, there is illustrated an AFM tip **24** in which the parameters essential to the method of the present invention are illustrated, namely, to create a molecular pile **26** on the surface **22***a* of a substrate material **22**. A tip **24** is provided, having a tip force, F, along a tip axis **25**. Typically, the tip force F is in the range of 100 nN. The tip **24** is scanned inside a bit or pixel **28** occupying a portion

of the material surface **22***a*. The scanning takes place in the x-y plane at a corresponding frequency of ω_x and ω_y where ω_x is the scanning frequency parallel to the x-axis and ω_y is the scanning frequency parallel to the y-axis. The origin is defined as the location of the tip before scanning commences. This is preferably the center of the pixel **28**. The pixel **28** is centered about the x-y plane and has sides **28***a*, **28***b*, **28***c*, and **28***d*. Side **28***a* corresponds to the side of the pixel on the negative x axis, side **28***b* corresponds to the side on the x axis, side **28***c* corresponds to the side on the y axis, and **28***d* corresponds to the side on the negative y axis.

If ω_x is greater than ω_y the long chain molecules will be swept in the x-direction to form a molecule pile **26** with its long axis parallel to the y-axis, that is, either toward side **28***a* or **28***b*. The inverse situation would occur if $\omega_y > \omega_x$. A photograph of a molecular pile **26** on a material surface **22***a* is shown in FIG. **2**.

Additionally, the angle θ the tip **24** makes with the z-axis and the azimuthal angle ϕ, defined as the angle between the positive x-axis and the projection of the tip axis **25** on the x-y plane, determine the direction the molecules will be pushed toward. In FIG. **1**A the tip **24** is oriented in an arbitrary direction with ϕ between 0° and 90° and θ between 0° and 90°. In order to create piles parallel to the x- and/or y-axis θ is preferably always between 0° and 90°, and ϕ is preferably equal to 0°, 90°, 180° or 270°.

FIG. **1**B illustrates the situation where ϕ is equal to 90° (i.e., toward the positive y-axis, as shown in FIG. **1**B), the tilt angle $\theta \geqq 5°$, and $\omega_y > \omega_x$. In this situation the long chain molecules will then be pushed along the y-axis and the pile **26** will be formed parallel to the x-axis, and on the negative side of the y-axis, designated as side **28***d*. Under the condition where $\theta \sim 0$, the molecule pile **26** will form on both sides of the high frequency sweep direction, as shown in FIG. **3**.

Using a polymer, such as polyimide, the height of the pile **26** is greater then 10 nm, and using the process as described, the location of the pile **26** can be controlled with a very high degree of accuracy. It is therefore possible to write to a material's surface **22***a*, such as a storage disk, and to replicate disks from a master disk using conventional, inexpensive techniques similar to those used in audio disc production.

In order to be able to quickly detect (i.e., read) the piles **26** on the material's surface **22***a* the piles **26** must be prominent in size. However, as the pile **26** size increases in size, the writing speed and storage density decreases. To achieve both fast writing time and high storage density, it has been found that the root mean square roughness of the material's surface **22***a* should be less than 100 nm, and preferably less than 5 nm. The root mean square roughness is calculated by first calculating the average of square of the height of the hills and valleys from a base plane. The root mean square roughness is the square root of that average. The base plane is typically defined as the plane (parallel to the surface) about which the same amount of material is above (i.e., hill) and below (i.e., valley). The root mean square roughness is typically measured using well known reflectivity methods known in the art.

Easy and inexpensive replication is not possible with other methods involving AFM because the writing is done by damaging the substrate surface where the shape of the feature is not well controlled and the size is not prominent enough to permit easy detection.

To further enhance the speed of writing, the surface **22***a* can be modified by rapid annealing. Preferably the rapid annealing is accomplished by exposing the surface **22***a* to laser pulses. For a polymer, a laser pulse is used with the pulses length being in the preferred range of 10 ns to 1 ms at an energy below the ablation threshold. The surface is heated for a long enough time such that local mobility of the molecular chains is provided, but shorter than the Rouse time. The Rouse time is defined as the longest relaxation time of the molecule.

The high speed pulse from the laser heats up the surface molecules well above their glass transition temperature (T_g) causing them to move vigorously. Since the free volume of chain ends is larger than the rest of the molecule, the molecular system will rearrange by bringing their chain ends to the surface **22***a*. As a result, the molecules on the surface **22***a* will have a higher free volume than its previous unexposed state, making it easier for them to be pushed. The easier it is for the long chain molecules to be pushed, the faster the writing speed becomes. For example, a ten fold increase in pushing efficiency results in a ten fold increase in writing speed.

Additionally, AFM tips of the prior art allow only motion along the z-axis which is useful for moving molecules or atoms but not very efficient for pushing molecular chains in a well controlled direction. As discussed previously, the tip needs to scan in the x- and y-directions (ω_x and ω_y, respectively) as well as tilt toward the x- and y-axes (along angles θ and ϕ). In co-pending application Ser. No. 08/960,692, a mechanism for achieving the desired tip scanning and movement is discussed. Such a mechanism greatly facilitates the pushing of the molecular chains in a well controlled direction.

Referring now to FIG. **4**A, there is illustrated a substrate plate **102** having multiple tips **24**. The plate is preferably fabricated from a silicon substrate. The plate **102** is preferably fixed and the substrate sits upon a three axis piezoelectric stage. However, the plate **102** can alternatively sit upon the three axis piezoelectric stage **104**, with the substrate being fixed. The operation of the three axes stage **104** is well known in the art. The stage **104** provides scanning along the x-axis (ω_x), scanning along the y-axis (ω_y), and translation along the z-axis. The goniometer **106** has a cantilever **108** having a cantilevered end **108***a* and a supported end **108***b*. The goniometer **108** also has a tip **24** for writing onto a surface **22***a* of a substrate material **22**. The tip **24** is controlled by the goniometer **106** and is connected to the goniometer **106** by the cantilever **108**. The goniometers **106** preferably comprise a multi-layer structure shown in detail in FIG. **4**B. The goniometers **106** are preferably fabricated simultaneously using conventional semiconductor fabrication methods. The cantilever **108** and tips **24** are also preferably fabricated simultaneously using conventional semiconductor fabrication processes.

Referring now to FIGS. **4**B, **4**C, and **4**D in detail, there is shown the geometry of the multi-layer structure of the goniometer **106** necessary to accomplish the following three motions; translation in the z-direction, tilt about the y-axis, and tilt about the x-axis. The tip **24** is mounted on the cantilevered end **108***a* of the cantilever **108**. The supported end **108***b* of the cantilever **108** is mounted on a multi-layer block **112**. Layers **114**, **116***a*, **116***b*, **118***a*, and **118***b* are first second, third, fourth, and fifth piezoelectric layers, respectively. The piezoelectric layers provide Z-axis translation, Y-axis tilt, and X-axis tilt, of the cantilever **108**, and thus the tip **24**, with the second and third piezoelectric layers **116***a* and **116***b* operating as a pair and the fourth and fifth piezoelectric layers **118***a* and **118***b* operating as a pair. A pair of electrodes surround each piezoelectric layer for actuation

of the piezoelectric layers. A first pair of electrodes **120** and **122** surround and actuate the first piezoelectric layer **114**, a second pair of electrodes **124***a* and **126***a* surround and actuate the second piezoelectric layer **116***a*, a third pair of electrodes **124***b* and **126***b* surround and actuate the third piezoelectric layer **116***b*, a fourth pair of electrodes **128***a* and **130***a* surround and actuate the fourth piezoelectric layer **118***a*, and a fifth pair of electrodes **128***b* and **130***b* surround and actuate the fifth piezoelectric layer **118***b*. Photo-imagable dielectric layers **132**, **134**, **136**, and **138** insulate the electrodes as well as provide adhesion. The photo-imagable dielectric layers **132**, **134**, **136**, and **138** may be single or multiple layers and are preferably fabricated from a photo-imagable epoxy. Inorganic dielectric layers **140**, **142** may also be used to provide a planarized (i.e., smooth) surface to coat the next organic layer. Layer **144**, preferably a suitable organic material may also be used. The dielectric layers **140**, **142**, and **144** are preferably fabricated from a relatively hard material such as silicon dioxide or silicon nitride. A first filler layer **146** is provided to insulate the second, third, fourth, and fifth piezoelectric layers **116***a*, **116***b*, **118***a*, and **118***b*, respectively, from each other. The first filler layer **146** is preferably an organic dielectric layer composed of materials such as polyimide or polysulfone. A second filler layer **148***a* insulates electrodes **124***a*, **124***b*, **128***a*, and **128***b* from each other. A third filler layer **148***b* insulates electrodes **126***a*, **126***b*, **130***a*, and **130***b* from each other. The second and third filler layers **148***a*, **148***b* are preferably composed of the same materials as the first filler layer **146**.

Referring now to FIGS. **4**A, **4**B, **4**C, and **4**D the operation of the goniometer **106** will now be described. In order to achieve the desired angles of ϕ (0°, 90°, 180°, and 270°) different combinations of the second, third, fourth, and fifth piezoelectric layers **116***a*, **116***b*, **118***a*, and **118***b* are activated. To achieve an angle of ϕ=0°, that is to tilt the tip axis **25** to-ward the positive x-axis, the fifth piezoelectric layer **118***b* is expanded by applying a potential difference between the fifth pair of electrodes **128***b* and **130***b*. This will cause the cantilever **108** and hence the tip **24** to tilt toward the positive x-axis which corresponds to ϕ=0°. Alternatively, a greater potential can be applied between the fifth pair of electrodes **128***b* and **130***b* than is applied between the fourth pair of electrodes **128***a* and **130***a* causing the fifth piezoelectric layer **118***b* to expand larger than the fourth piezoelectric layer **118***a*, also resulting in the tip **24** titling toward the positive x-axis. To produce the conditions under which ϕ=180°, that is to tilt the tip axis **25** toward the negative x-axis, the fourth piezoelectric layer **118***a* is expanded by applying a potential difference between the fourth pair of electrodes **128***a* and **130***a*. Alternatively, a greater potential can be applied between the fourth pair of electrodes **128***a* and **130***a* than is applied between the fifth pair of electrodes **128***b* and **130***b* causing the fourth piezoelectric layer **118***a* to expand larger than the fifth piezoelectric layer **118***b*, also resulting in the tip **24** titling toward the negative x-axis.

To produce the conditions under which ϕ=90°, that is to tilt the tip axis **25** toward the positive y-axis, the third piezoelectric layer **116***b* is expanded by applying a potential difference between the third pair of electrodes **124***b* and **126***b*. Alternatively, a greater potential can be applied between the third pair of electrodes **124***b* and **126***b* than is applied between the second pair of electrodes **124***a* and **126***a* causing the third piezoelectric layer **116***b* to expand larger than the second piezoelectric layer **116***a*, also resulting in the tip **24** titling toward the positive y-axis. To produce the conditions under which ϕ=270°, that is to tilt the tip axis toward the negative y-axis, the second piezoelectric layer **116***a* is expanded by applying a potential difference between the second pair of electrodes **124***a* and **126***a*. Alternatively, a greater potential can be applied between the second pair of electrodes **124***a* and **126***a* than is applied between the third pair of electrodes **124***b* and **126***b* causing the second piezoelectric layer **116***a* to expand larger than the third piezoelectric layer **116***b*, also resulting in the tip **24** titling toward the negative y-axis.

Another alternative for producing ϕ=0°, 90°, 180°, and 270° is to normally apply a potential difference between sets of electrodes to cause the corresponding piezoelectric layer to normally be in an expanded state, and to contract the piezoelectric layer into its relaxed state by removing the potential between electrodes. For instance, the fourth and fifth piezoelectric layers **118***a* and **118***b* can be normally expanded by applying a potential difference between their respective sets of electrodes. To achieve ϕ=0°, the fourth piezoelectric layer **118***a* is contracted by removing or decreasing the potential difference between the fourth pair of electrodes **128***a* and **130***a* resulting in a tilt toward the positive x-axis. Alternatively, a greater potential difference can be maintained between the fifth pair of electrodes **128***b* and **130***b* then is maintained between the fourth pair of electrodes **128***a* and **130***a*, resulting in the fourth piezoelectric layer **118***a* contracting more than the fifth piezoelectric layer **118***b*, also resulting in a tilt toward the positive x-axis.

The degree at which the tip axis is tilted toward the negative y or positive y axes determines angle θ, which is the angle the tip axis makes with the z-axis. Therefore, θ will be determined by the difference in the amount of expansion of piezoelectric layers **116***a* and **116***b*.

The goniometer **106** also provides movement along the z-axis. This movement is more of a fine movement along the z-axis, with the stage **104** providing a coarse movement along the z-axis. Applying a potential difference between the first pair of electrodes **120** and **122** expands the first piezoelectric layer **114** from a relaxed position. The expansion provides movement along the Z-axis. Alternatively, the first piezoelectric layer **114** can be normally expanded and contracted toward its relaxed position when a potential difference between the first pair of electrodes **120** and **122** is removed or decreased.

This fine movement is necessary when scanning within a pixel **28**. This is especially important if an array of tips is used, as shown in FIG. **4**A, to control the writing operation of one tip independent from the other tips in the array. If only a single tip is being utilized for writing, then the z-motion of the stage **104** will serve the same purpose. After scanning in a direction within a pixel **28**, the tip is lifted with the fine z-axis movement provided by the first piezoelectric layer **114**, moved back to a starting position, and lowered, again with the fine z-axis movement provided by the first piezoelectric layer **114**, before beginning another scan. For example, referring to FIG. **1**B, the tip **24** starts at side **28***c* and is scanned in the negative y direction while it is in a lowered position corresponding to the first piezoelectric layer **114** being relaxed, which builds a pile **26** parallel to the x-axis on side **28***d*. After reaching side **28***d*, the tip is lifted, i.e., the first piezoelectric layer **114** is expanded, and the tip is returned to side **28***c* where it is again lowered and scanned toward side **28***d*. Concomitantly, while one tip **24** is writing, another tip **24** may be writing another pixel with a different set of ω_y, ω_x, θ, and ϕ conditions. When moving the tip from pixel to pixel, the coarse z-axis movement provided by the stage **104** is utilized.

The tip is preferably fabricated from a hard material such as silicon nitride, tungsten carbide, or silicon dioxide, as is

the cantilever. Tips of the prior art are pointed as is shown in FIG. **4**E, which was necessary to move atoms. The points are achieved by either a conical shaped tip, as shown in FIGS. **4**E and **4**F, or a pyramid shaped tip (not shown). However tips of different geometry have been found to be more efficient at moving molecular chains, one such configuration is shown in FIGS. **4**G and **4**H in which a knife edge tip **24***a* is shown. Instead of being pointed, tip **24***a* has a knife edge which is more useful for moving long chain molecules. However, the knife edge tip **24***a* is only useful when scanning in one direction, resulting in parallel piles **26**.

As discussed earlier and shown in FIGS. **1**A and **1**B, it can be seen that the bit occupies a pixel **28** of the substrate surface **22***a*. The molecular piles **26** can be moved to locations around the periphery of the pixel to form one of 16 bit configurations.

Referring to FIG. **5**, there is illustrated the sixteen different bit configurations possible, referred to by reference numerals **1**–**16** respectively. The molecular piles can be moved to achieve all of the possible configurations shown by varying the variables discussed previously, namely ω_y, ω_w, θ, and ϕ. The variables needed to achieve each of the sixteen bit configurations are listed in table 1.

Fifteen of the configurations (reference numerals **2**–**16** in FIG. **5**) are achieved by pushing the molecular piles **26** to different sides **28***a*, **28***b*, **28***c*, and

TABLE 1

Pile Configuration	ω_x	ω_y	ϕ	θ
1	—	—	—	—
2	low	high	270°	≧5°
3	low	high	90°	≧5°
4	low	high	—	0°
5	high	low	0°	≧5°
6	high	low	90°	≧5°
7	high	low	—	0°
8	successive combination of 2 and 5			
9	successive combination of 2 and 6			
10	successive combination of 2 and 7			
11	successive combination of 3 and 5			
12	successive combination of 3 and 6			
13	successive combination of 3 and 7			
14	successive combination of 4 and 5			
15	successive combination of 4 and 6			
16	successive combination of 4 and 7			

28*d* along the periphery of the surface pixel **28**. The sixteenth bit (reference numeral **1** in FIG. **5**) is a null pixel, having no molecular piles **26**.

Additionally, configurations 2–7 are achieved in a single operation using the variables listed in table 1. Configurations 8–16 are achieved by successive operations used to achieve configurations 2–7. For example, configuration 8 is achieved by successively forming combinations 2 and 5 within the same pixel **28**.

These molecular pile **26** configurations allow a single bit to be written in sixteen different ways making the data naturally base sixteen, thereby improving the storage density by sixteen fold over binary data storage.

Referring now to FIG. **6**, there is illustrated a molecular bar-code, referred to generally by reference numeral **600**. The bar code is formed on the surface **22***a* of a substrate **22** using the method of the present invention. Bar-codes of this type can be made very small, and can be written by the method of the present invention and read using conventional methods known in the art.

An application for the molecular bar-code **600** is illustrated in FIG. **6** in which the bar-code **600** is disposed on the surface **22***a* of a silicon wafer **22**. Silicon wafers typically have a layer of polyimide on their uppermost surface which make them ideal for the molecular chain manipulation of the present invention.

There are several steps (gates) which a silicon wafer goes through during its fabrication. Each step can be performed by different processing equipment to achieve the same end result. In a given fabrication line, each wafer, in principle, can undergo processing at different process conditions, for example, at different deposition temperatures. Therefore, silicon wafers from the same fabrication lines and processing equipment can undergo a combination of different processes used in their fabrication. The processes that each silicon wafer undergoes is typically recorded, in an extensive process known in the art as "bookkeeping." Bookkeeping is necessary when determining which processes make for a higher quality wafer. However, the bookkeeping process can be quite expensive.

The molecular bar-code **600** illustrated in FIG. **6** can contain the bookkeeping information under which the silicon wafer was fabricated. It can be placed on the wafer in a compact form and since it is placed on the silicon wafer to which it refers, the need to cross-reference or match-up silicon wafers with respective bookkeeping records is eliminated.

FIG. **6** shows a series of pixels **28** arranged side by side on the surface **22***a* of a silicon wafer **22**. Molecular piles **26** are formed within the pixels as described above to form a series of parallel lines, the lines being the piles **26** themselves. The bar-code can a contain a combination of thin lines **605** made up of a single pile **26**, thick lines **610** made up of two piles **26** formed on the sides of two adjacent pixels **28**, or null pixels **615**. Each combination of thin lines, thick lines, and null pixels is used to contain the bookkeeping information used in the silicon wafers fabrication. Since the bar code contains only parallel piles **26**, the knife edge tip **24***a* of FIGS. **4**F and **4**G are particularly useful.

From the foregoing, it becomes readily apparent to one skilled in the art that the novel storage media of the present invention offers increased storage density at high recording rates. Due to the inventive media surface manipulation the advantages offered by the inventive structure resides in:

(a) a writing technique whereby AFM is used, not to damage the media surface, but to alter its topography;

(b) a single bit may be written in sixteen different ways making the data naturally base **16** thereby improving the storage density by sixteen fold;

(c) the surface topography can be replicated by conventional, inexpensive transfer techniques to mass produce disks from a single master disk thereby improving the writing speed by several orders of magnitude;

(d) writing to the media may be performed at room temperature and atmospheric pressure instead of the very cold temperatures and vacuum needed in the methods of the prior art; and

(e) writing can be done on relatively inexpensive polymer substrates instead of the single crystal surfaces of the prior art.

While there has been shown and described what is considered to be preferred embodiments of the invention, it will, of course, be understood that various modifications and changes in form or detail could readily be made without departing from the spirit of the invention. It is therefore intended that the invention be not limited to the exact forms described and illustrated, but should be constructed to cover

all modifications that may fall within the scope of the appended claims.

Having thus described our invention, what we claim as new and desire to secure by Letters Patent is:

1. A method for storing information comprising the steps of:

selecting a material substrate having an upper surface, the upper surface having molecules with a molecular weight greater than 5,000, the molecules further having chain ends; and

pushing molecules on said upper surface into a molecular pile at selected locations.

2. The method of claim **1**, further comprising the steps of:

exposing the upper surface to radiant energy pulses at an energy below the ablation threshold, and

heating said surface whereby the molecules are at a temperature well above the glass transition temperature to rearrange the molecules by bringing their chain ends to said upper surface.

3. The method of claim **1**, wherein the pushing step is performed by an atomic force microscope having a tip.

4. The method of claim **3**, further comprising the step of tilting the AFM tip relative to the upper surface for facilitating the pushing of molecules.

5. The method of claim **1**, wherein the molecules are pushed into one of sixteen different pile configurations around the periphery of a pixel on the upper surface.

6. The method of claim **1**, wherein the selected material is a polymer selected from the group consisting of polyimide, polyamide, polyester, polycarbonate, polyolefin, polyether ketone, polyether, polyacrylate, photo cross linked polymers, and mixtures thereof.

* * * * *