University of Nebraska - Lincoln
DigitalCommons@University of Nebraska - Lincoln

The Handbook: Prevention and Control of Wildlife Damage | Wildlife Damage Management, Internet Center for

1-1-1994

PIGEONS (Rock Doves)

David E. Williams
State Director, USDA-APHIS-ADC, Lincoln, Nebraska 68501

Robert M. Corrigan
Staff Specialist, Vertebrate Pest Management, Purdue University, West Lafayette, Indiana 47907

Follow this and additional works at: http://digitalcommons.unl.edu/icwdmhandbook

Part of the Environmental Sciences Commons

Williams, David E. and Corrigan, Robert M., "PIGEONS (Rock Doves)" (1994). *The Handbook: Prevention and Control of Wildlife Damage.* Paper 69.
http://digitalcommons.unl.edu/icwdmhandbook/69

This Article is brought to you for free and open access by the Wildlife Damage Management, Internet Center for at DigitalCommons@University of Nebraska - Lincoln. It has been accepted for inclusion in The Handbook: Prevention and Control of Wildlife Damage by an authorized administrator of DigitalCommons@University of Nebraska - Lincoln.

David E. Williams
State Director
USDA-APHIS-
Animal Damage Control
Lincoln, Nebraska 68501

Robert M. Corrigan
Staff Specialist
Vertebrate Pest Management
Purdue University
West Lafayette, Indiana 47907

PIGEONS (Rock Doves)

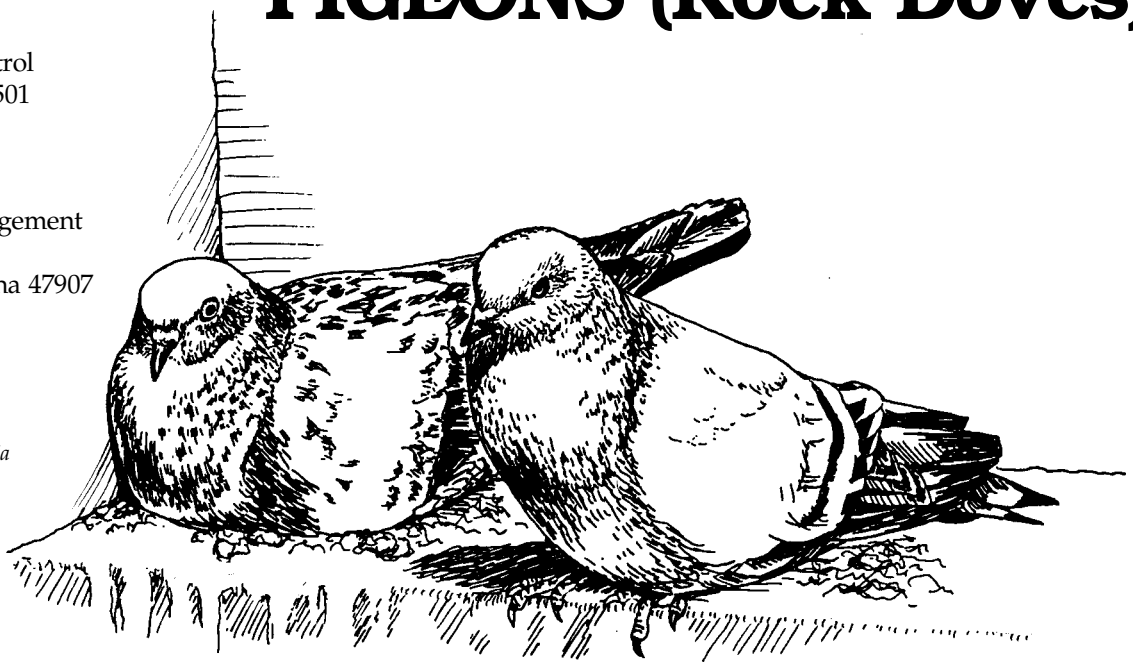

Fig. 1. Pigeons, *Columba livia*

Damage Prevention and Control Methods

Exclusion

Screen eaves, vents, windows, doors, and other openings with 1/4-inch (0.6-cm) mesh hardware cloth.

Change angle of roosting ledge to 45° or more.

Attach porcupine wires (Cat Claw™, Nixalite™), ECOPIC™, or Bird Barrier™ to roosting sites.

Install electrical shocking device (Avi-Away™, Flyaway™, Vertebrate Repellent System [VRS™]) on roost sites.

Construct parallel or grid-wire (line) systems.

Habitat Modification

Eliminate food supply. Discourage people from feeding pigeons in public areas. Clean up spilled grain around elevators, feed mills, and railcar clean-out areas. Eliminate standing water.

Frightening

Visual and auditory frightening devices are usually not effective over long periods of time.

Avitrol® (a chemical frightening agent)

Repellents

Tactile:
various nontoxic, sticky substances (4 -The Birds™, Hotfoot™, Tanglefoot™, Roost No More™, and Bird-Proof™).

Odor:
naphthalene flakes.

Toxicants

Oral:
DRC-1339, used under supervision of USDA-APHIS-ADC only.

Avitrol®, depends on bait concentration.

Contact:
Rid-A-Bird™ perches containing fenthion (use with great care; can be hazardous to nontarget species).

Fumigants

Generally not practical.

Trapping

Several live trap designs are effective.

Shooting

Where legal.

Other Control Methods

Alpha-chloralose (immobilizing agent used under the supervision of certified personnel only).

Nest removal.

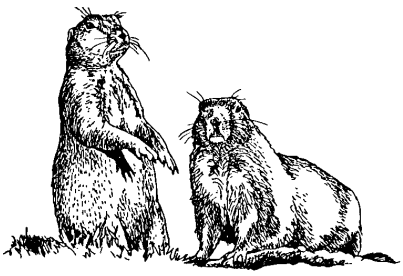

PREVENTION AND CONTROL OF WILDLIFE DAMAGE — 1994

Cooperative Extension Division
Institute of Agriculture and Natural Resources
University of Nebraska - Lincoln

United States Department of Agriculture
Animal and Plant Health Inspection Service
Animal Damage Control

Great Plains Agricultural Council
Wildlife Committee

Identification

Pigeons (*Columbia livia*) typically have a gray body with a whitish rump, two black bars on the secondary wing feathers, a broad black band on the tail, and red feet (Fig. 1). Body color can vary from gray to white, tan, and black. The average weight is 13 ounces (369 g) and the average length is 11 inches (28 cm). When pigeons take off, their wing tips touch, making a characteristic clicking sound. When they glide, their wings are raised at an angle.

Range

Pigeons are found throughout the United States (including Hawaii), southern Canada, and Mexico.

Habitat

Pigeons are highly dependent on humans to provide them with food and sites for roosting, loafing, and nesting. They are commonly found around farm yards, grain elevators, feed mills, parks, city buildings, bridges, and other structures.

Food Habits

Pigeons are primarily grain and seed eaters and will subsist on spilled or improperly stored grain. They also will feed on garbage, livestock manure, insects, or other food materials provided for them intentionally or unintentionally by people. In fact, in some urban areas the feeding of pigeons is considered a form of recreation. They require about 1 ounce (30 ml) of water daily. They rely mostly on free-standing water but they can also use snow to obtain water.

General Biology, Reproduction, and Behavior

The common pigeon was introduced into the United States as a domesticated bird, but many escaped and formed feral populations. The pigeon is now the most common bird pest associated with people.

Pigeons inhabit lofts, steeples, attics, caves, and ornate architectural features of buildings where openings allow for roosting, loafing, and nest building. Nests consist of sticks, twigs, and grasses clumped together to form a crude platform.

Pigeons are monogamous. Eight to 12 days after mating, the females lay 1 or 2 eggs which hatch after 18 days. The male provides nesting material and guards the female and the nest. The young are fed pigeon milk, a liquid-solid substance secreted in the crop of the adult (both male and female) that is regurgitated. The young leave the nest at 4 to 6 weeks of age. More eggs are laid before the first clutch leaves the nest. Breeding may occur at all seasons, but peak reproduction occurs in the spring and fall. A population of pigeons usually consists of equal numbers of males and females.

In captivity, pigeons commonly live up to 15 years and sometimes longer. In urban populations, however, pigeons seldom live more than 3 or 4 years. Natural mortality factors, such as predation by mammals and other birds, diseases, and stress due to lack of food and water, reduce pigeon populations by approximately 30% annually.

Damage

Pigeon droppings deface and accelerate the deterioration of buildings and increase the cost of maintenance. Large amounts of droppings may kill vegetation and produce an objectionable odor. Pigeon manure deposited on park benches, statues, cars, and unwary pedestrians is aesthetically displeasing. Around grain handling facilities, pigeons consume and contaminate large quantities of food destined for human or livestock consumption.

Pigeons may carry and spread diseases to people and livestock through their droppings. They are known to carry or transmit pigeon ornithosis, encephalitis, Newcastle disease, cryptococcosis, toxoplasmosis, salmonella food poisoning, and several other diseases. Additionally, under the right conditions pigeon manure may harbor airborne spores of the causal agent of histoplasmosis, a systemic fungus disease that can infect humans.

The ectoparasites of pigeons include various species of fleas, lice, mites, ticks, and other biting insects, some of which readily bite people. Some insects that inhabit the nests of pigeons are also fabric pests and/or pantry pests. The northern fowl mite found on pigeons is an important poultry pest.

Pigeons located around airports can also be a threat to human safety because of potential bird-aircraft collisions, and are considered a medium priority hazard to jet aircraft by the US Air Force.

Legal Status

Feral pigeons are not protected by federal law and most states do not afford them protection. State and local laws should be consulted, however, before any control measures are taken. Some cities are considered bird sanctuaries that provide protection to all species of birds.

Damage Prevention and Control Methods

Habitat Modification

Elimination of feeding, watering, roosting, and nesting sites is important in long-term pigeon control. Discourage people from feeding pigeons in public areas and clean up spilled grain around elevators, feed mills, and rail-car clean-out areas. Eliminate pools of standing water that pigeons use for watering. Modify structures, buildings, and architectural designs to make them less attractive to pigeons.

Exclusion

Pigeons can be excluded from buildings (in some cases very easily) by blocking access to indoor roosts and nesting areas. Openings to lofts, steeples, vents, and eaves should be blocked with wood, metal, glass,

masonry, 1/4-inch (0.6-cm) rust-proofed wire mesh, or plastic or nylon netting.

Roosting on ledges can be discouraged by changing the angle to 45° or more. Sheet metal, wood, styrofoam blocks, stone, and other materials can be formed and fastened to ledges to accomplish the desired angle. Ornamental architecture can be screened with 1-inch (2.5-cm) mesh polypropylene u.v.-stabilized netting to prevent roosting, loafing, and nesting. To make the netting aesthetically pleasing, it can be spray painted to match the color of the building, but black is often the best choice. The life span of this netting can be as long as 10 years.

In a tool or machinery shed, barn, hangar, or other similar buildings, roosting can be permanently prevented by screening the underside of the rafter area with netting. Nylon netting can be stapled or otherwise affixed to the underside of rafters to exclude birds from nesting and roosting. Panels can be cut into the netting and velcro fasteners can allow access to the rafter area to service equipment or lights.

Porcupine wires (Cat Claw™, Nixalite™) are mechanical repellents that can be used to exclude pigeons. They are composed of a myriad of spring-tempered nickel stainless steel prongs with sharp points extending outward at all angles. The sharp points of these wires inflict temporary discomfort and deter pigeons from landing on these surfaces. The prongs are fastened to a solid base that can be installed on window sills, ledges, eaves, roof peaks, ornamental architecture, or wherever pigeons are prone to roost (Fig. 2). Elevate the base with plastic washers and anchor it with electrical bundle straps. Sometimes pigeons and sparrows cover the wires with nesting material or droppings, which requires occasional removal.

A variation of porcupine wires, ECOPIC™, mounts flat to a surface and has a triangular pattern of vertically oriented stainless steel rods.

Bird Barrier™ is another permanent nonlethal mechanical repellent used to exclude pigeons from structures. It is a stainless steel coil affixed to a base-mounting strip that can be attached to structural features as one would with porcupine wires.

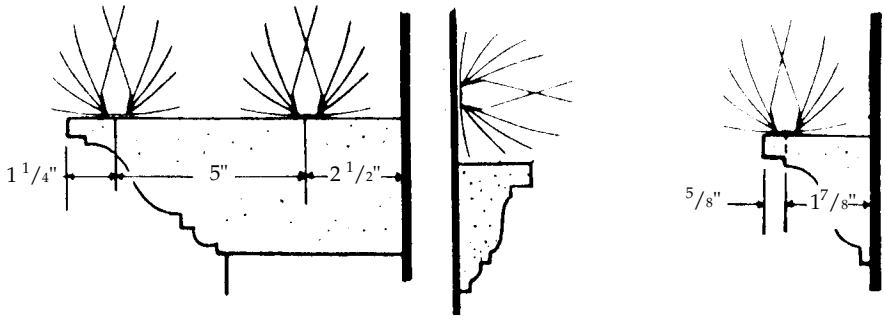

Fig. 2. Porcupine wires are a relatively permanent method of discouraging pigeons from roosting on structures.

Tightly stretched parallel strands of 16- to 18-gauge steel wire or 80-pound+ (36-kg+) test monofilament line can be used to keep birds off support cables, narrow ledges, conduit, and similar areas. Attach L-brackets at each end of the area or item to be protected and fasten the wire to the L-brackets with turnbuckles. Slack is taken out using the turnbuckles. L-brackets should be welded or attached with a cable clamp or aircraft hose clamps (threads on standard radiator clamps become stripped under the high torque loads required for holding L-brackets supporting wire over long distances). On heavily used structures, it may be necessary to stretch 3 lines at 2, 5, and 7 inches (5, 12, and 18 cm) above the surface.

Overhead monofilament grid systems, 1 x 1 foot to 2 x 2 feet (30 x 30 cm to 60 x 60 cm), have been used successfully to reducing pigeon activity in enclosed courtyards. Persistent pigeons will likely penetrate parallel or grid-wire (line) systems.

Electric shock bird control systems (Avi-Away™, Flyaway™, and Vertebrate Repellent System [VRS™]) are available for repelling many species of birds, including pigeons. The systems consist of a cable durably embedded in plastic with two electrical conductors. Mounting and grounding hardware and a control unit are included. The conductors carry a pulsating electric charge. When pigeons make contact with the conductors and the cable, they receive a shock that repels but does not kill them. The cable can be installed in situations also suitable for porcupine wires and stretched steel wires or monofilament lines. Although these devices and their installation are usually labor intensive and/or expensive, their effectiveness in some cases justifies the investment. These devices have a life span of 8 years on residential structures.

Frightening

Noise-making devices are usually disturbing to humans but have little permanent effect on roosting pigeons. High-frequency (ultrasonic) sound, inaudible to humans, is not effective on pigeons. Revolving lights, waving colored flags, balloons, rubber snakes, owl models, and other devices likewise have little or no effect. Roman candles, firecrackers, and other pyrotechnics may have a temporary effect but have many limitations in use and often fail to provide long-term control, especially against pigeons.

Nesting sites can be sprayed with streams of water to disperse pigeons, but this must be done persistently until the birds have established themselves elsewhere.

Avitrol® (4-aminopyridine). Avitrol® is classified as a chemical frightening agent, but it can be used as a toxicant in areas where higher mortality is acceptable. Blend ratios of 1:9 will produce higher mortality than more dilute applications. See the section on Toxicants in this chapter for information on prebaiting and baiting.

Avitrol® for pigeon control is a whole-corn bait formulated with 4-aminopyridine, a Restricted Use Pesticide and may be used only by a certified applicator or persons under their direct supervision. Birds that consume sufficient amounts of the treated bait usually die. The dying birds exhibit distress behavior that frightens other members of the flock away. In order to minimize the mortality and maximize the flock-alarming reactions, the treated bait must be diluted with clean, untreated whole corn.

In urban areas where high bird mortality may cause adverse public reactions, a blend ratio of 1:19 or 1:29 will produce low mortality, but requires more time to achieve control. Where high mortality is acceptable, a blend ratio of 1:9 will produce quicker population reduction. Prebaiting for at least 10 to 14 days is critical for a successful program. At the conclusion of the program, all unconsumed bait should be recovered to prevent nontarget birds from ingesting the bait.

Secondary poisoning is unlikely to occur with Avitrol®, although it is toxic to any bird through direct ingestion. Avitrol® is designed to be as selective as possible but should always be used to minimize the possibility that nontarget species will have access to the bait. After initial success, Avitrol® need only be applied periodically following prebaiting to maintain effective control.

Repellents

Various nontoxic chemical repellents (polybutenes) such as 4 The Birds™, Hotfoot™, Tanglefoot™, Roost No More™, and Bird-Proof™, are available in the form of liquids, aerosols, nondrying films, and pastes. These substances are not toxic to pigeons. Rather, they produce a sticky surface that the pigeons dislike, forcing them to find loafing or roosting sites elsewhere.

Building surfaces should first be cleaned and protected with a waterproof tape before applying the repellent. Otherwise, sticky repellents may be difficult to remove or may stain the building. Applications should be made about 1/2 inch (1.3 cm) thick in rows spaced no farther than 3 to 4 inches (7.6 to 10.2 cm) apart. Pigeons should not be able to land between the rows without contacting the repellent. To be effective, all roosting and/or loafing surfaces in a problem area must be treated, or the pigeons will move to untreated surfaces.

The effectiveness of sticky repellents is usually lost over time, especially in dusty areas. An application may remain effective for 6 months to 2 years. Some manufacturers have added a protective second-stage application that forms a crust on the repellent and helps extend the life of the repellent in dusty or hot areas. Some pest control operators spray clear shellac over the applied repellent to accomplish the same affect.

Although chemical repellents offer effective results in many situations, there are several important considerations. First, repellents are not aesthetically pleasing. Second, they can be annoying to professional window cleaners in urban areas. Third, nesting pigeons will occasionally drop sticks and straw over the repellents and continue to nest. Fourth, high temperatures may cause the material to run down the sides of buildings, while cold temperatures may cause the repellent to become too stiff for the bird's feet to penetrate. Finally, chemical repellents are most appropriate for small- and medium-sized jobs. For large commercial situations requiring significant amounts of labor and expensive equipment, the use of repellents may be economically shortsighted because they are expensive to reapply frequently.

Naphthalene is a repellent that may offend the bird's olfactory sense. Naphthalene flakes are federally registered as a repellent for pigeons, though they are not registered in every state. Upon evaporation, naphthalene produces a strong odor that repels pigeons from enclosed areas such as attics and wall voids. The flakes are spread on the attic floor or between walls, using about 5 pounds (2.3 kg) for every 2,000 cubic feet (56 cu. m) of space. After the birds have departed, all openings must be closed to prevent reentry. The strong odor produced by naphthalene flakes is also disagreeable and irritating to some people. Prolonged breathing of the vapor should be avoided.

Toxicants

Pigeon control using toxicants may require special permits issued through various state agencies such as state departments of agriculture, health, or wildlife.

Toxic Baits

Prebaiting. Prebaiting is the single most important element of a successful toxicant program. The birds must be trained to feed on a specific bait at specific sites before the toxicant is introduced. If the prebaiting is not done correctly, the results will likely be less than desirable.

Before any control work is attempted, the daily movement patterns of the birds between feeding, loafing, and roosting areas must be determined. Several potential baiting sites can then be selected. The number of bait sites selected depends on the size of the area being treated and the number of birds involved, but if possible, three to five baiting sites should be used. Establish bait sites in locations normally frequented by the birds, free from disturbances, and where rigid control over access can be maintained at all times. Generally, the closer the bait site is to the normal feeding site, the more successful the program.

In urban areas, flat rooftops make excellent bait sites, even though pigeons do not normally feed on them. They do normally frequent rooftops, however, and it is possible to control access to them. With persistence, pigeons can be trained to feed almost anywhere.

Every effort must be made to reduce or eliminate food sources other than the prebait so that pigeons will have to rely solely on the prebait. It must be as nearly identical to the toxic bait as possible. Generally, the best prebait and bait is clean, untreated whole corn. Whole corn is recommended because smaller resident birds, such as sparrows, are physically incapable of swallowing it, thus reducing the possibility

of poisoning these birds. Also, corn is a high-energy food and is therefore preferred by pigeons, especially during the winter months. A constant supply of fresh, acceptable prebait must be made available to the birds at all times. There should always be a little prebait left over when the birds finish feeding. It is impossible to train birds to feed at a site where they cannot get enough to eat. Therefore, all birds must have the opportunity to feed or they will simply go elsewhere. Once the pigeons have been trained to feed at the selected locations, the toxic bait may be applied.

Prebaiting and subsequent toxic baiting should be done at the same time of day and in the same manner. Pigeons usually feed most vigorously shortly after leaving the roost early in the morning. Therefore, prebait and bait should be placed before dawn. The duration of the prebaiting period will vary as each case is different. Usually, 2 weeks of prebaiting is most effective.

Apply the prebait on firm, relatively smooth surfaces, or on wide, shallow wooden or metal trays. This helps the applicator maintain control of the prebait and poison bait, and will facilitate the removal of any unused material at the end of the control program. Record the quantity of prebait placed and consumed each day so that the correct amount of treated bait to be used can be determined. Generally, 100 feeding pigeons will eat about 7 to 8 pounds (15 to 18 kg) of whole corn per day.

The prebait and toxic bait should be placed in numerous small piles so that all birds can feed at one time. Never place the prebait or toxic bait in one pile. For large flocks (100 birds or greater), 8 to 12 piles containing 1 pound (454 g) of grain each may be necessary. Small flocks of less than 100 birds can be accommodated with three to four piles.

During the prebaiting period, the site must be carefully observed to ensure that the prebait is not attracting nontarget birds such as cardinals, blue jays, or doves. If protected birds appear at a bait site, continue to put out the prebait to keep the protected birds there while toxic baits are put out elsewhere. Do not place toxic baits at sites used by nontarget birds. If protected birds begin using all the locations, new bait sites will have to be established or the plan to use toxic baits abandoned.

Poisoning birds is a complex task that requires careful attention to details. Do not take shortcuts, especially in prebaiting.

Baiting and Baits

All prebait must be removed before the toxic bait is applied. When the toxic bait is put out, the feeding birds should not be disturbed but should be observed from a hidden location.

DRC-1339 (3-chloro-*p*-toluidine hydrochloride). DRC-1339 is a Restricted Use Pesticide registered for the control of pigeons. It can only be used by USDA-APHIS-ADC employees or persons working under their direct supervision.

The toxicity of DRC-1339 to birds varies considerably. Starlings, red-winged blackbirds, crows, and pigeons are most susceptible, but house sparrows and hawks are somewhat resistant. Therefore, DRC-1339 may be a toxicant that provides a higher margin of safety than the other toxicants for use in cities where peregrine falcons have been introduced. Generally, mammals are not sensitive to the toxic effects of DRC-1339.

DRC-1339 is slow-acting and apparently painless. It takes from several hours to 3 days for death to occur. Death is caused by uremic poisoning and occurs without convulsions or spasms as in the case of other toxicants. DRC-1339 is metabolized within 2 1/2 hours after ingestion. Normally, there is little chance of undigested bait remaining in the crop or gut of dead or dying pigeon. The excreta and the flesh of pigeons poisoned with DRC-1339 are nontoxic to predators or scavengers.

Because of the slow rate of death, the majority of dead birds are usually found at the roost site. Since bait shyness does not develop, DRC-1339 allows for baiting programs to be extended until control is achieved. Areas where pigeons roost or loaf should be monitored so that carcasses can be picked up.

As in other baiting programs, prebaiting is critical to successful control. Prebaits and carriers for toxic baits can be made from one of the following: oat groats, cracked corn, whole corn, commercial wild bird seed, or commercial poultry mix. A good technique is to use more than one type of prebait, in order to assess which is better accepted by the target population.

Do not bait sites where prebait has not been accepted well or where nontarget species have been consuming prebait.

Contact Poisons

The Rid-A-Bird™ perch contains 11% fenthion, a Restricted Use Pesticide, and is registered for pigeon control. These perches are hollow tubes that hold about 1 ounce (28 ml) of the toxicant within a wick. When a bird lands on the perch, the toxicant is absorbed through the feet in a short period of time. Death usually takes place within 24 to 72 hours. Pigeons may die at the roost site or some distance away if contact was made at a feeding or loafing area.

Perches are available in a number of configurations for both indoor and limited outdoor applications. The wide perch, 1 x 24 inches (2.5 x 61 cm), is used to accommodate the sitting (nongrasping) habit of pigeons (Fig. 3). Ten to 12 perches will solve most problems, but large jobs may require as many as 30 perches. For example, in a warehouse measuring 50 x 100 feet

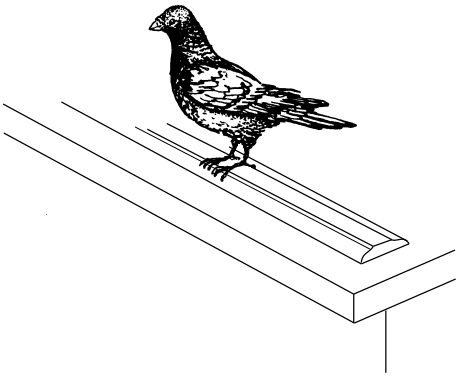

Fig. 3 Rid-A-Bird™ perch for pigeons.

(15 x 30 m), most pigeons can be eliminated by placing one or two perches in each heavily used area. Effective places to install perches around structures can be determined if the area is observed for preferred perching areas for 48 hours before placement.

Rid-A-Bird™ perches are restricted for use at farm buildings, loading docks, roof tops, nonfood storage warehouses, and bridges. They are prohibited inside food processing, handling, or storage buildings.

Toxic perches should be used only by persons experienced with their use because they can be hazardous to other birds, animals, and people if used incorrectly. Label instructions must be rigidly followed.

Fenthion may present a secondary hazard to birds of prey, small carnivores, and scavengers. Any nontarget animals, including humans, that come in contact with the perch itself could absorb a fatal amount of fenthion.

Trapping

Pigeons can be effectively controlled by capturing them in traps placed near their roosting, loafing, or feeding sites. Some traps, such as the common pigeon trap (Fig. 4), are over 6 feet (2 m) tall, while low-profile traps (Fig. 5) measure only 9 inches (23 cm) high and 24 inches (61 cm) in width and length. Generally, the larger the population of birds to be trapped, the larger the trap should be. Although larger traps hold many birds, they can be cumbersome in situations such as rooftop trapping programs. In these instances, it may be more convenient to use several low-profile traps that are more portable and easier to deploy.

Small portable traps, such as the funnel trap or the lily-pad trap (Fig. 6), can be easily constructed and deployed. Live traps and/or trap parts designed for the capture of small birds are also commercially available (see **Supplies and Materials**).

Tips for Effective Trapping. The best locations for traps are major pigeon loafing areas. During the heat of the summer, place traps near pigeon

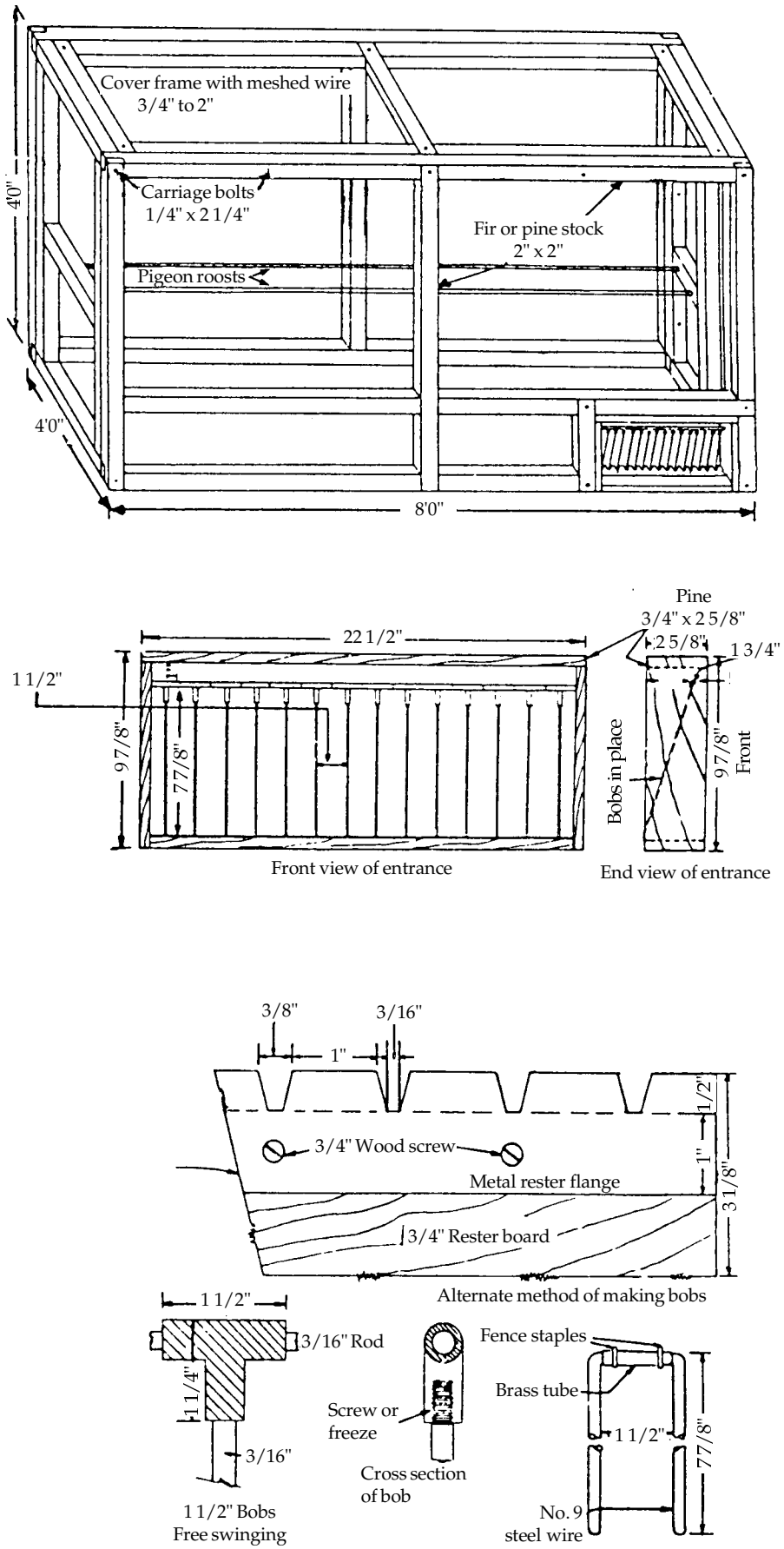

Fig. 4. A bob-type trap (walk-in design).

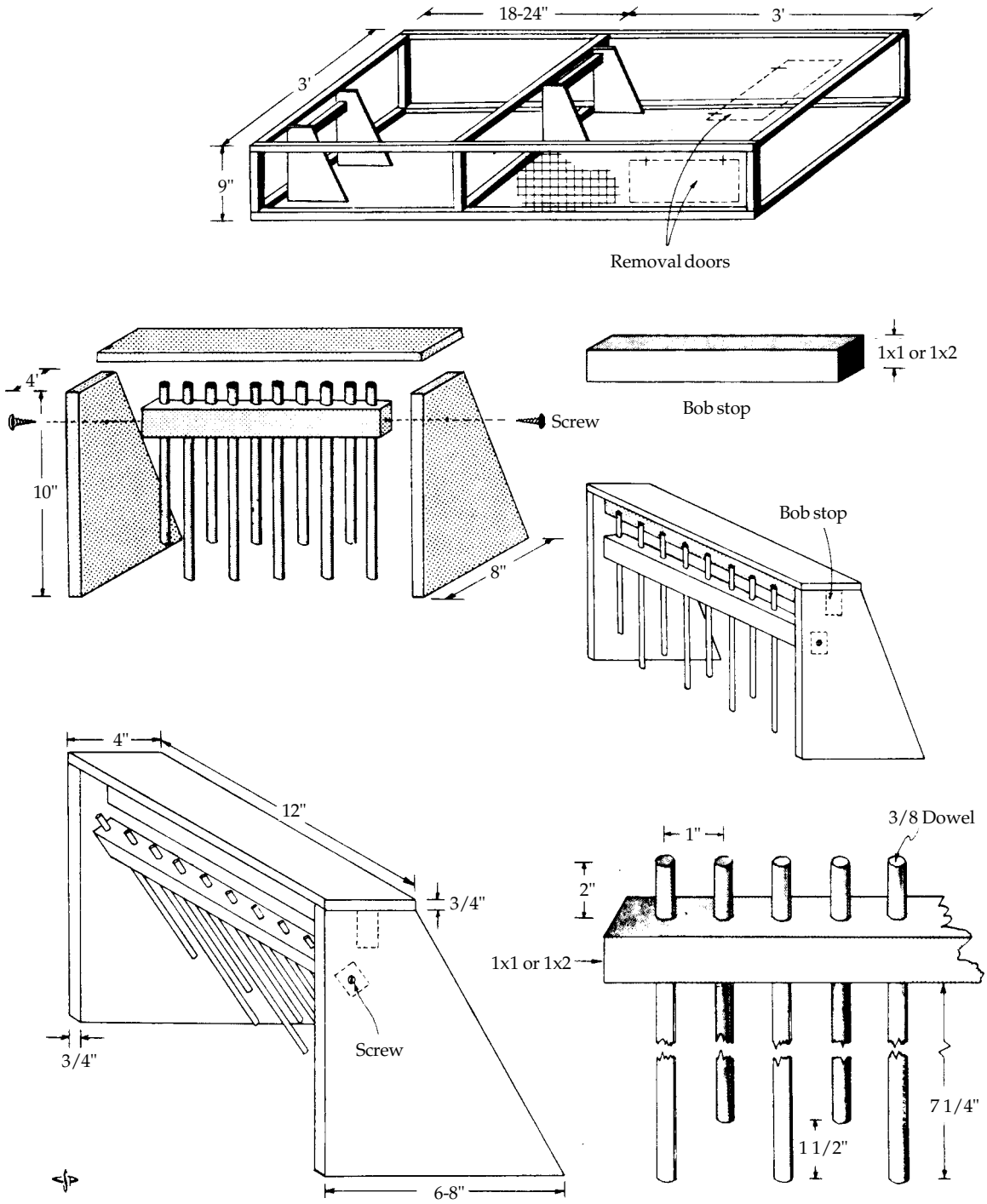

Fig. 5. A bob-type trap (low-profile design).

a

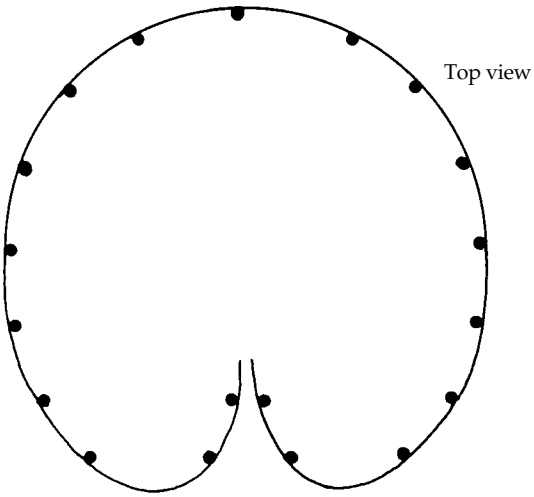

Lily-Pad Trap

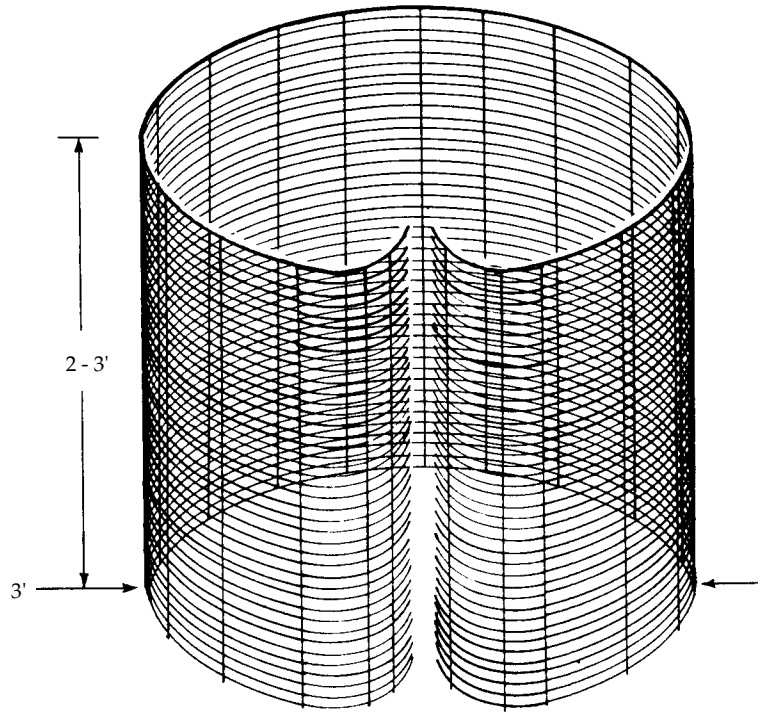

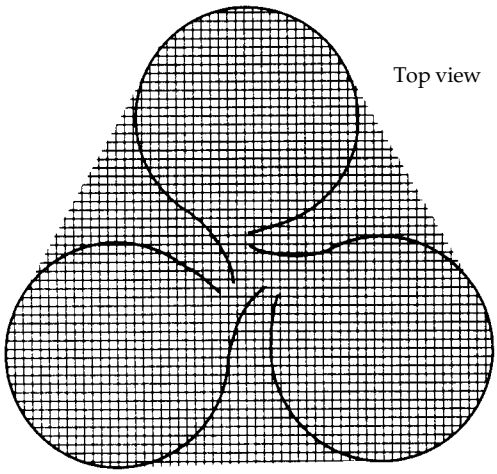

Clover-Leaf Trap

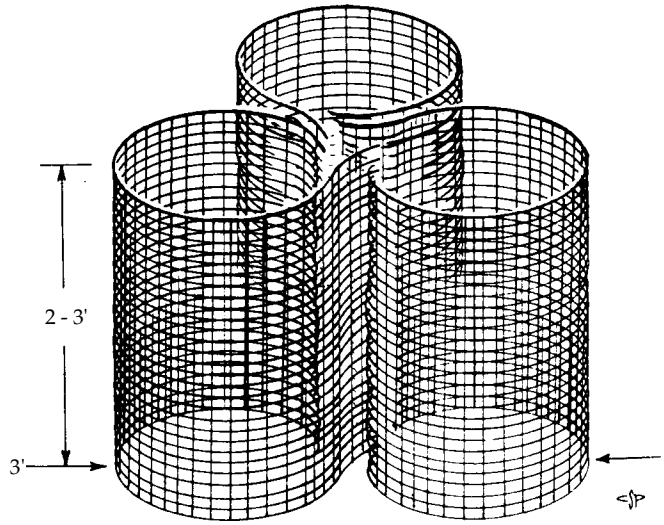

b

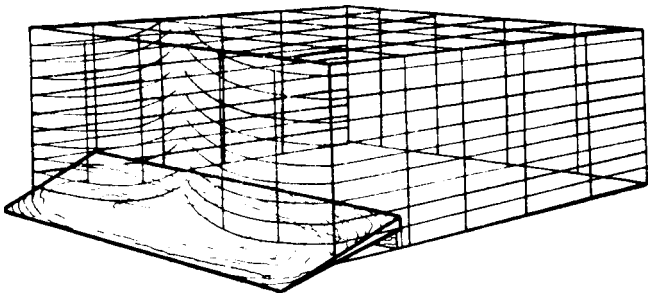

Double Funnel Trap

Fig. 6. (a) Lily-pad trap and clover-leaf trap; (b) double funnel trap.

watering sites such as rooftop cooling condensers. Also consider prebaiting areas for several days before beginning the actual trapping. To prebait, place attractive baits, such as corn or milo, around the outside of the traps. After 3 to 4 days, the baits can be placed inside the trap (in both compartments of the low-profile trap). Four or five decoy birds should be left in the trap to lure in more pigeons.

Visit traps at least every other day. Fresh food and water must be provided at all times for decoy birds. If "trap-shyness" develops, traps can be left open for 2 to 3 days and then reset again for 4 to 5 days. Select another site if traps fail to catch a sufficient number of birds.

The disposal of trapped birds should be quick and humane. The act of inducing painless death is called euthanasia. There are several options to select from, including inhalant agents, noninhalant pharmacologic agents, and physical methods. Review the 1986 report of the American Veterinary Medical Association panel on euthanasia when selecting a humane disposal method.

For large-scale pigeon control projects, the most cost-effective and humane method is to use a carbon monoxide (CO) or carbon dioxide (CO_2) gas chamber. These chambers utilize commercially available compressed CO or CO_2 in gas cylinders. The chambers can be purchased commercially or be constructed by modifying a garbage can or 55 gallon (209 l) drum with a tight-fitting lid having a hole for a gas supply line. Birds will expire in 5 to 7 minutes (using CO or CO_2), when the gas flow displaces approximately 20% of the chamber volume per minute. Chambers should be used in well-ventilated areas, preferably outside, to protect personnel.

Releasing pigeons back to the "wild" is impractical. Pigeons are likely to return even when released 50 or more miles (>80 km) from the problem site, or become pests in other communities.

Cannon Nets. A cannon net may be effective and practical where pigeons congregate in large numbers on the ground (for instance, rail yards and grain-handling facilities). Cannon nets are large sections of netting attached to explosive charges that are activated when birds are within range. They can be set up adjacent to areas where pigeons visit on a daily basis to feed. The net operator observes from a hidden location and activates the explosive propellent with an electrical charge. The netting travels over the birds, then drops on the flock. Cannon nets can capture up to 500 birds at a time.

Shooting

Where permissible, persistent shooting with .22 caliber rifles (preferably using ammunition loaded with short-range pellets), .410 gauge shotguns, or high-powered air rifles can eliminate a small flock of pigeons. For example, shooting can be an effective technique to remove the few pigeons that may persist around farm or grain elevators after a reduction program has been terminated.

Most towns and cities have ordinances prohibiting the discharge of firearms within corporate limits. Check local laws before employing a shooting program.

Other Control Methods

Alpha-chloralose. Alpha-chloralose is an immobilizing agent that depresses the cortical centers of the brain. Pigeons fed about 60 mg/kg of alpha-chloralose become comatose in 45 to 90 minutes. The pigeons can then be captured to be relocated or euthanized. Full recovery occurs 4 to 24 hours later.

The Food and Drug Administration (FDA) has granted USDA-APHIS-ADC authority to use alpha-chloralose to capture pigeons under a perpetual Investigational New Animal Drug Application (INADA). The INADA is the only legal way to use alpha-chloralose as a wildlife immobilizing agent. The drug can be legally obtained for this use only from the Pocatello Supply Depot. Only USDA-APHIS-ADC personnel certified in its use or individuals under their supervision are allowed to use alpha-chloralose.

Nest Destruction Destroying nests and eggs at 2-week intervals can be helpful in reducing pigeon numbers. This technique, however, should be used in conjunction with other control methods.

Economics of Damage and Control

Structures inhabited by pigeons can sustain damage from droppings and harbor disease. The droppings can also make structural surfaces slick and hazardous to walk or climb on.

Washing acidic accumulations of droppings to prevent structural damage can cost in excess of $10,000 per year. The longevity of industrial roofing materials can be adversely affected by droppings, resulting in expensive replacement costs.

Employee health claims and lawsuits resulting from diseases or injuries attributed to pigeons can easily exceed $100,000.

An integrated pigeon management program incorporating lethal and nonlethal control techniques is well worth the investment when considering the economic damage and health threats caused by large populations of pigeons.

Acknowledgments

Special thanks go to Mr. Fred Courtsal, retired USDA-APHIS-ADC state director, for his work in compiling the original chapter on pigeon control. Many ADC field personnel provided valuable input regarding updates and revisions on pigeon control. We would also like to thank Kathleen LeMaster and Dee Anne Gillespie, who coordinated revisionary corrections.

Figure 1 by Emily Oseas Routman.

Figure 2 courtesy of Nixalite Company of America.

Figure 3 by Renee Lanik, University of Nebraska-Lincoln.

Figures 4, 5, and 6 from US Fish and Wildlife Service (1961), *Trapping Pigeons*, Leaflet AC 206, Purdue University, West Lafayette, Indiana.

For Additional Information

American Veterinary Medical Association. 1986. Report of the American Veterinary Medical Association panel on euthanasia. J. Amer. Veterin. Med. Assoc. 188(3):252-268.

Bennett, G. W., J. M. Owens, and R. M. Corrigan. 1989. Pigeon control. Pages 333-336 *in* Truman's scientific guide to pest control operations. Purdue Univ./Edgell Commun. Duluth, Minnesota. 539 pp.

Corrigan, R. M. 1989. A guide to managing pigeons and sparrows. Pest Control Tech.17(1):38-40, 44-46, 48-50.

Corrigan, R. M., D. E. Williams, and F. Courtsal. 1989. Pigeons, ADC-1. Coop. Ext. Serv. Purdue Univ. West Lafayette, Indiana. 6 pp.

Department of the Interior, US Fish and Wildlife Service. 1961. Trapping pigeons, ADC-206. Coop. Ext. Serv. Purdue Univ., West Lafayette, Indiana. 2 pp.

Jackson, W. B. 1978. Rid-A-Bird™ perches to control bird damage. Proc. Vertebr. Pest Conf. 8:47-50.

Marsh, R. E., and W. E. Howard. 1990. Vertebrate pests. Pages 771-832 *in* A. Mallis, ed., Handbook of pest control. 7th ed. Franzak and Foster Co., Cleveland, Ohio.

Martin, C., and L. R. Martin. 1982. Pigeon control: an integrated approach. Proc. Vertebr. Pest Conf. 10:190-192.

Murton, R. K., R. J. P. Thearle, and J. Thompson. 1972. Ecological studies of the feral pigeon, *Columba livia* var. J. Appl. Ecol. 9:835-874.

Scott, H. G. 1961. Pigeons, public health importance and control. Commun. Disease Center. Atlanta, Georgia. 17 pp.

Weber, W. J. 1979. Health hazards from pigeons, starlings and English sparrows. Thomson Pub., Fresno, California, 138 pp.

Woronecki, P. P. 1988. Effect of ultrasonic, visual and sonic devices on pigeon numbers in a vacant building. Proc. Vertebr. Pest Conf. 13:266-272.

Editors

Scott E. Hygnstrom
Robert M. Timm
Gary E. Larson