University of Nebraska - Lincoln
DigitalCommons@University of Nebraska - Lincoln

The Handbook: Prevention and Control of Wildlife Damage | Wildlife Damage Management, Internet Center for

1-1-1994

CROWNED SPARROWS

Jerry P. Clark
Primary Staff Biologist, California Department of Food and Agriculture, Sacramento, California 95814

Scott E. Hygnstrom
Extension Wildlife Damage Specialist, Department of Forestry, Fisheries and Wildlife, University of Nebraska, Lincoln, Nebraska 68583

Follow this and additional works at: http://digitalcommons.unl.edu/icwdmhandbook

Part of the Environmental Sciences Commons

Clark, Jerry P. and Hygnstrom, Scott E., "CROWNED SPARROWS" (1994). *The Handbook: Prevention and Control of Wildlife Damage.* Paper 70.
http://digitalcommons.unl.edu/icwdmhandbook/70

This Article is brought to you for free and open access by the Wildlife Damage Management, Internet Center for at DigitalCommons@University of Nebraska - Lincoln. It has been accepted for inclusion in The Handbook: Prevention and Control of Wildlife Damage by an authorized administrator of DigitalCommons@University of Nebraska - Lincoln.

Jerry P. Clark
Primary Staff Biologist
California Department of Food
and Agriculture
Sacramento, California 95814

Scott E. Hygnstrom
Extension Wildlife Damage Specialist
Department of Forestry, Fisheries
and Wildlife
University of Nebraska
Lincoln, Nebraska 68583-0819

CROWNED SPARROWS

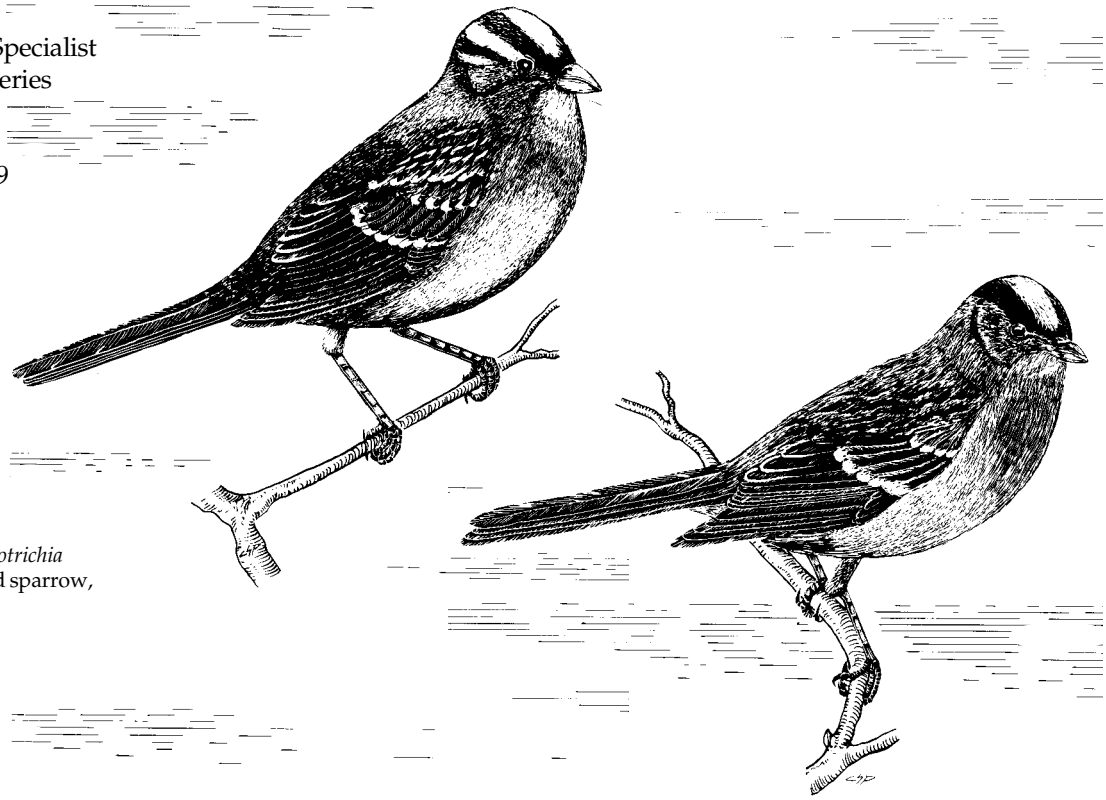

Fig. 1. White-crowned sparrow, *Zonotrichia leucophrys* (left) and golden-crowned sparrow, *Zonotrichia atricapilla* (right)

Damage Prevention and Control Methods

Exclusion

Protect small areas with screened or netted frames

Habitat Modification

Remove unnecessary cover around valuable crops.

Frightening

Use propane exploders in conjunction with shotgun fire, shell crackers, bird bombs or whistles, and raptor-mimicking kites.

Avitrol®.

Repellents

Capsicum

Toxicants

None are registered or currently available for use.

Trapping

Lily pad, cloverleaf, or modified Australian crow traps.

Identification

White-crowned sparrows (*Zonotrichia leucophrys*, Fig. 1) are distinguished by their pink or yellowish bill, erect posture, gray throat and breast, and prominent crown streaked with black and white. Geographic races, including the mountain (*Z. l. oriantha*), Gambel's (*Z. l. gambelii*), Nuttall's (*Z. L. nuttalli*), and Puget Sound white-crowned sparrow (*Z. l. pugetensis*) show minor differences in head pattern, bill color, and song. Their songs vary geographically, but consist primarily of clear whistles.

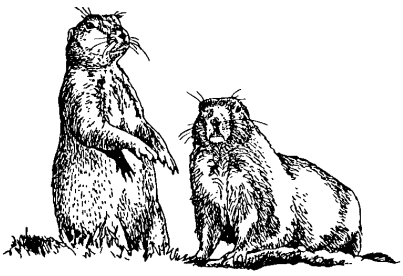

PREVENTION AND CONTROL OF WILDLIFE DAMAGE — 1994

Cooperative Extension Division
Institute of Agriculture and Natural Resources
University of Nebraska - Lincoln

United States Department of Agriculture
Animal and Plant Health Inspection Service
Animal Damage Control

Great Plains Agricultural Council
Wildlife Committee

Golden-crowned sparrows (*Zonotrichia atricapilla*, Fig. 1) are similar in appearance to white-crowned sparrows with the exception that they have no white head stripes. Instead, adults have a dull golden-yellow central crown stripe that is heavily bordered with black. Immatures look like female house sparrows, but are larger, darker, have longer tails, and usually have a yellowish crown. Their song consists of three to five clear whistles that descend in scale. They are less numerous and cause fewer problems than white-crowned sparrows.

Range

White-crowned sparrows are abundant in the western United States. They breed primarily in Alaska and Canada and winter in the western and southern United States and Mexico. Breeding and wintering ranges overlap in California, Oregon, Washington, and other western states. Gambel's, the most important, race, breeds in Alaska and western Canada but winters in the interior valleys of California and from San Francisco Bay southward.

Golden-crowned sparrows breed along the coast from Alaska to northern Washington and winter west of the Cascades and in the Sierra Nevada to Baja California. They migrate south to California in October and stay until April.

Habitat

White-crowned sparrows are birds of the chaparral, brushy river bottoms, brush piles, rubbish heaps, dense weed fields, and fence rows. They commonly winter in dense hedges and thick plantings of shrubbery found near towns and suburbs. Golden-crowned sparrows commonly winter in boreal scrub and spruce.

Food Habits

Food of white-crowned sparrows averages 75% plant and 25% animal matter. Most of the animal food is taken during the breeding season. During the winter months white-crowned sparrows feed primarily on seeds. The diet of golden-crowned sparrows is thought to be similar.

General Biology

Gambel's white-crowned sparrows appear in California valleys in September and reach their maximum density during October, becoming injurious to crops in localized areas. They remain extremely abundant until March and gradually leave by May.

Nests are built in bushes or on the ground among mosses sheltered by higher vegetation. White-crowned and golden-crowned sparrows lay 3 to 5 eggs. One brood is raised per year. Incubation takes 12 days, with age at first flight commonly 10 days.

Damage and Damage Identification

The crowned sparrows are involved in crop depredations over a wide area and upon a great variety of crops. Newly sown lawn grass and garden and flower seedlings are often completely consumed. Waves of migrating crowned sparrows have been known to destroy every small flower and vegetable plantlet in home gardens. The damage is most severe in areas adjacent to brushy river bottoms. Extensive damage often occurs to commercial plantings of lettuce, broccoli, sugar beets, alfalfa, and grain. Depredations are most noticeable in field crops that are adjacent to river bottom brush or weedy fields or have shrubbery or trees planted for windbreaks. Damage occurs along the margins of the fields near dense cover favored by these birds and is usually limited to the outer 50 to 100 feet (15 to 30 m) of the field. Seedlings are often consumed by crowned sparrows when crop seeds germinate and emerge from the soil. Damage normally stops when the seedlings reach a height of 3 or 4 inches (7.6 to 10.2 cm).

Crowned sparrows play a minor role in debudding almond and other deciduous fruit trees. Occasionally, a few trees near a wood or brush pile may be severely attacked. Depredations increase as the buds swell.

Legal Status

Crowned sparrows are classified as migratory nongame birds in the Code of Federal Regulations. Depredation permits are required from the US Fish and Wildlife Service before any control activities can be initiated. Crowned sparrows may be controlled in California under the general supervision of the county agricultural commissioner.

Damage Prevention and Control Methods

Exclusion

To protect flower seedlings and home vegetable gardens, grow plants under frames covered with wire or plastic netting.

Habitat Modification

Since crowned sparrows usually feed within a few yards of secure cover, the elimination of all useless brush piles, rolls of wire, and stacks of wood around vulnerable crops is desirable. Eliminate weedy borders along fields. Destroy fence rows and unnecessary shrubbery if occupied by sparrows.

Frightening

Historically, the most widely used sound devices for minimizing crowned sparrow depredations have been the automatic propane exploders. These units should be moved every day or two to prevent the birds from becoming habituated to the sound. Shell crackers fired from a 12-gauge shotgun, bird bombs, and whistlers discharged from a 6-mm flare pistol are commonly used to frighten sparrows from damaged fields. Some growers have reported limited success with raptor-mimicking kites tethered to stationary posts positioned along crop borders.

Avitrol® Mixed Grains (0.5%) is a toxic chemical that produces flock-alarming

reactions in birds that ingest a sufficient quantity. It is currently registered in California to control crowned sparrows that may damage sprouting crops. Prebaiting is usually necessary with untreated grain (fine chick scratch) to establish a feeding pattern. The prebait should be placed in trays in the same area where the treated bait will be exposed. Avitrol®-treated chick scratch must be exposed in trays only. Set trays out in the field after the crop is planted and before crowned sparrows have moved into the area. Each bait tray should contain one part Avitrol® Mixed Grain concentrate with two to nine parts of untreated fine chick scratch. The quantity of treated bait to expose per tray will vary depending on the amount taken by crowned sparrows during prebaiting. Several trays should be placed where the birds are normally observed. Bait should be replaced if it becomes water soaked or depleted.

Repellents

Granular formulations of capsicum are federally registered for repelling sparrows from certain fruit, vegetable, and grain crops. Read the product label for specific information.

Toxicants

None are registered.

Trapping

Crowned sparrows are usually quite easy to trap using lily pad or cloverleaf traps and have been taken by modified Australian crow traps. Use milo or finely cracked corn as bait.

The lily pad trap and cloverleaf trap are easy to set up and peg to the ground (Fig. 2). They are effective in catching small numbers of crowned sparrows. These traps are usually 3 feet (1 m) high and 3 feet (1 m) wide.

Australian crow traps are used to capture crows, magpies, and ravens. The traps can be modified by changing the entrance, and used to capture crowned sparrows, starlings, blackbirds, house finches, and house sparrows (Fig. 3). Minor modifications can be made to fit the trap on a truck or trailer. The basic design of the trap, however, should not be changed.

Proper trap location is one of the most important factors in achieving good results. Observe the problem area to determine flyways and resting, perching, and feeding areas before placing traps. Place traps in open areas where they can be easily seen. Traps have been most effective where birds enter fields and orchards, or near resting and perching sites.

Trapped crowned sparrows serve as decoys to other birds. Decoy birds are usually essential in attracting other crowned sparrows. Use one to five live decoys, depending on the size of the trap. Provide food and water at all times to keep decoys alive and to make the trap more attractive to wild birds. Canary grass seed, wild bird seed mix, or chick scratch work well to maintain decoy birds. Install 1/4-inch (0.6-cm) dowel rods to serve as perches, especially in larger traps. Perches should run the full length of the trap, about 1 foot (30 cm) from the sides and halfway between the top and the bottom of the trap. Cold winds or hot sun can stress trapped birds. Fasten burlap to the sunny side of the trap to provide shade in the summer.

With small traps, the captured birds may be removed by hand. Birds can be removed from modified Australian crow traps by hand or with a small net. Several birds can be removed by cutting a 6 x 6-inch (15 x 15-cm) exit hole that is easily opened and closed in an upper corner of the rear of the trap. Place a small holding cage on the outside of the trap over the open exit hole and herd the birds from the trap into the holding cage. To euthanize the birds, place the holding cage in a plastic bag and inject carbon dioxide through a hose until the birds are dead. Burn or bury the dead birds.

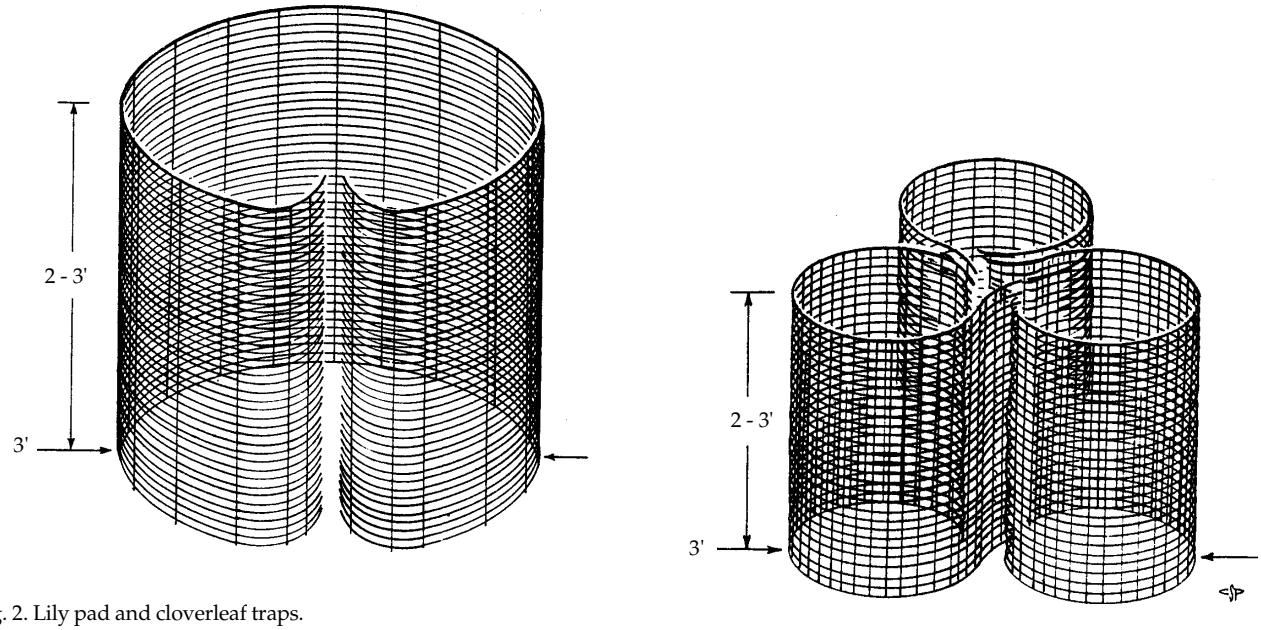

Fig. 2. Lily pad and cloverleaf traps.

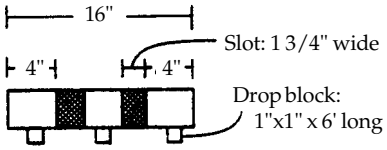

Entrance — end view

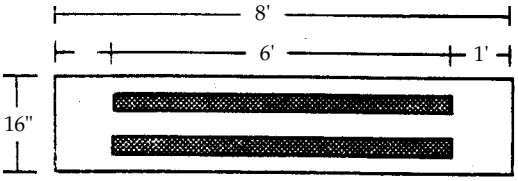

Entrance

Assembled Trap

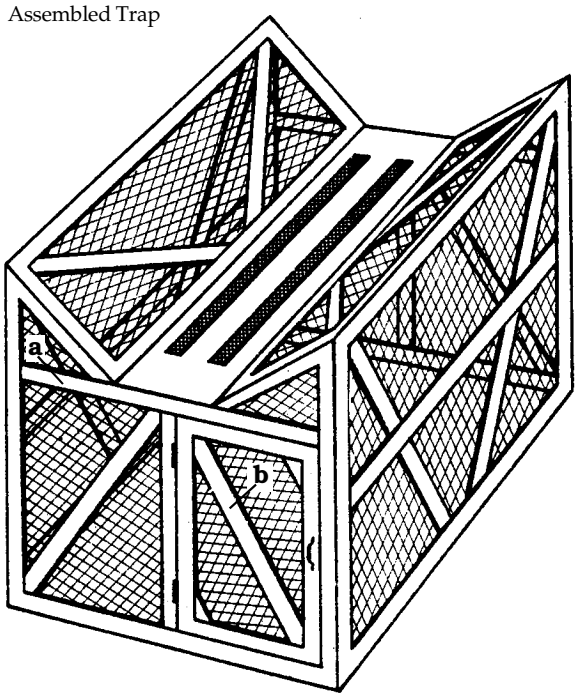

Important Assembly Instructions:

Place end panels between side panels; otherwise, top panels will not fit properly. Note:

a. Reinforce this area with a 2 x 4 x 16-inch (5 x 10.2 x 40.6- cm) piece of wood. This provides a greater surface area for the entrance to rest on.

b. Place a small door in this area for removal of trapped birds.

Materials Needed For Trap:

15 boards - 1 x 4s, 8 feet long (2.5 x 10.2 cm, 2.4 m long)
25 boards - 1 x 4s, 6 feet long (2.5 x 10.2 cm, 1.8 m long)
4 boards - 1 x 1s, 8 feet long (2.5 x 2.5 cm, 2.4 m long)
1/2-inch exterior plywood - 16 inches x 8 feet (40.1 cm x 2.4 m)
1/2-inch mesh aviary wire - 3 x 80 feet (0.9 x 24.4 m)
2 hinges
staples

Fig. 3. Modified Australian crow trap.

Acknowledgments

Figures 1, 4, and 5 from Clark (1986).

Figures 2 and 3 were adapted from Robbins et al. (1983) by David Thornhill, University of Nebraska-Lincoln.

For Additional Information

Beal, F. E. L. 1910. Birds of California in relation to the fruit industry. Biol. Survey Bull. No. 34. US Dep. Agric.

Clark, J. P. 1986. Depredating birds. Pages 701-1 - 726-1 *in* J. P. Clark, ed. Vertebrate pest control handbook. Calif. Dep. Food Agric. Sacramento.

Peterson, R. T. 1961. A field guide to western birds. Houghton Mifflin Co. Boston. 309 pp.

Robbins, C. S., B. Brunn, and H. S. Zim. 1983. Birds of North America. Golden Press. New York. 360 pp.

Editors

Scott E. Hygnstrom
Robert M. Timm
Gary E. Larson