1-1-2001

G1421 Disposal Methods of Livestock Mortality

Chris G. Henry
University of Nebraska at Lincoln, chenry1@unl.edu

Robert Wills
University of Nebraska at Lincoln

Larry L. Bitney
University of Nebraska at Lincoln, lbitney1@unl.edu

NebGuide
Published by University of Nebraska–Lincoln Extension, Institute of Agriculture and Natural Resources

G1421
(Revised July 2001)

Disposal Methods of Livestock Mortality

Chris Henry, Extension Engineer; Robert Wills, Extension Swine Veterinarian; and Larry Bitney, Professor of Agricultural Economics

This NebGuide discusses approved disposal methods for dead animals and provides guidelines for selecting a method.

The methods approved in Nebraska statutes for disposal of dead animals dying from infectious disease include burying the carcass at least 4 feet below the surface of the ground, burning the carcass in a permitted incinerator, removing it by a licensed rendering company, and composting. Burial, incineration, composting, and removal by a rendering company must be done within 36 hours of death. In all instances, disposal of carcasses must occur on the premises where the animal died, unless they are picked up by a licensed rendering company. Injection of liquefied animal remains is no longer an approved method of carcass disposal.

Rendering

Rendering companies have raised their fees and even discontinued service to some areas, due to changes in the animal by-products market. Meat packing plants have become more efficient in their abilities to recover and process by-products thus becoming more competitive with rendering companies. Lower prices for alternative high protein feedstuffs such as soybean meal have resulted in lower prices for meat and bone meal. Disease transmission issues also have impacted the market for meat and bone meal.

It is desirable to have a carcass storage area *(Figure 1)* that cannot be seen from a public road if the rendering method is used. The storage area should be at least 100 feet from production facilities to lessen risk of disease transmission by rodents. The facilities should be located and managed to minimize the biosecurity risk imposed by rendering trucks carrying disease organisms.

Incineration and Open Burning

A mortality incinerator *(Figure 2)* is essentially a convection oven (starved air combustor) that burns a carcass under a controlled environment at a very high temperature, reducing the carcass to ashes. Incinerators can operate on either diesel, natural gas, or propane. A diesel fueled incinerator will require from 1 to 3 gallons of fuel per 100 pounds of carcass. Large carcasses are more difficult to burn in most farm operated incinerators. They work best for carcasses smaller than 500 pounds.

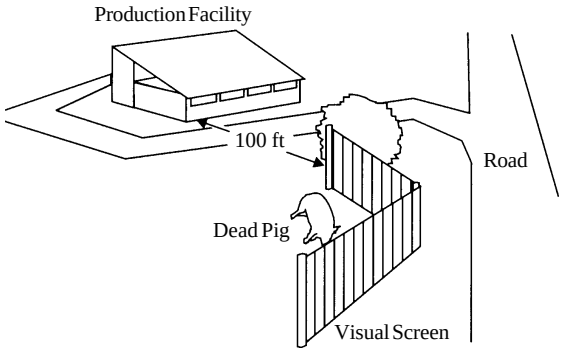

Figure 1. Carcass storage area for rendering pick up.

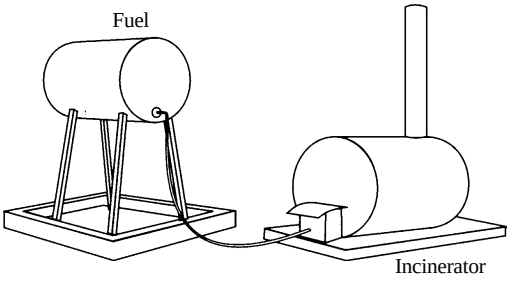

Figure 2. A mortality incinerator.

To own and operate an incinerator in Nebraska requires a Class II Nebraska Department of Environmental Quality (NDEQ) air operating permit and an air construction permit. The incinerator owner also is required to report the weight of carcasses burned annually in a yearly emission inventory report form sent by NDEQ. There may be county and city ordinances in place concerning incinerators and it is the producer's responsibility to comply with local regulations.

The incinerator should have a timer or other automatic shut-off so that when the carcass is consumed the burners shut off. The smoke generated from incinerating may generate complaints from neighbors. Burning carcasses in open pits

does not comply with NDEQ air quality standards and is not an approved method.

Burial

Livestock carcasses must be buried at least 4 feet below the ground within 36 hours. There are many challenges and risks associated with this disposal method. A common practice is to dig a trench and then, starting at one end, fill the trench in over time with carcasses and soil. However, maintaining an open trench poses a serious occupational hazard. Given this risk to human life, the burial method should be discouraged for routine disposal of livestock. Consider burial primarily for occasional or catastrophic losses.

Earth-moving equipment must be used to excavate a hole or trench for the carcasses, and during winter months it is difficult, if not impossible, to bury the carcasses in frozen soil. The liquid from decomposing carcasses can pose a risk to groundwater. The burial site should consist of deep, fine textured soils (such as clay and silt) with an underlying geology that poses little risk to groundwater contamination. The burial pit should be at least 100 feet away from production facilities to lessen risk of disease transmission by rodents. Nebraska law requires that excavators call the Diggers Hotline (800) 331-5666 before beginning any type of excavation.

Composting

Composting was approved in the 1999 session of the Nebraska legislature. The Department of Agriculture currently regulates mortality composting. New legislation in 2001 increased the carcass weight restriction from 300 lbs to 600 lbs. However, composting has been used to successfully dispose of larger carcasses, such as mature dairy cattle, in other states.

The concept can be described as burying the animal above ground in a mound of sawdust or other carbon source and allowed to decay. In the composting process, the tissues of carcasses are broken down aerobically by bacteria, fungi, actinomycetes, and protozoa to produce water vapor, carbon dioxide, heat, and a stabilized organic residue. High temperatures indicate good microbial activity and will reach 120 to 160 degrees F. An internal pile temperature of 131 degrees for three days is needed to destroy disease causing organisms.

Facility site selection is important to successful composting. A site must be selected so that surface water and groundwater sources will not be adversely affected. It's beneficial to locate the facility away from neighbors and human dwellings. The facility should be at least 100 feet away from production facilities to lessen the risk of disease transmission by rodents. The drainage of the site should be considered when deciding what type of compost facility to build. There should be no surface water contacting the com-post area. Clean water diversions should be built to control runoff water.

While composting can be accomplished fairly easily and economically, additional time and equipment are needed compared to the other disposal methods. To successfully operate a compost facility, a bucket loader or skid steer is needed to transport carcasses from buildings or lots to the compost facility, cover the carcasses, and move piles from the primary to the secondary stages. Equipment to haul and unload incoming carbon source is also needed. Finished compost can be spread on crop ground with a solid manure spreader.

Additional information on composting can be obtained from the Composting Module of the Environmentally Assured Program of the National Pork Producer Council, (800) 456-7675; www.nppc.org. A spreadsheet to estimate weight of mortality produced by an operation and the required size of composter is provided at www.manure.unl.edu/composting.html.

Deciding Which Option Best Fits Your Livestock Operation

Each livestock operation is different and the resources available vary. Each disposal method should be carefully considered in the context of how each one would work in a specific situation. Then, the cost to implement each of the feasible methods should be estimated. The result should be a method that is environmentally sound and cost effective for your operation.

Evaluate Logistic Factors First

The following factors should be considered first to determine which disposal methods are logistically and environmentally suited for a specific operation. The economics of each viable method can then be used to make the final selection.

Incineration

- ☐ Smoke and odors will not be a nuisance to neighbors
- ☐ Carcasses are smaller than 550 pounds
- ☐ Required permits obtained (annual reporting required)

Burial

- ☐ Have access to backhoe or other earth moving equipment
- ☐ Labor is available for daily trenching and covering
- ☐ Land is available year round for burial
- ☐ Burial pit is at least 100 feet away from production facilities
- ☐ Burial site consists of deep, fine textured soils
- ☐ Underlying geology poses little risk for groundwater contamination
- ☐ Trench bracing equipment is available

Composting

- ☐ Ample carbon source is available
- ☐ If not using sawdust, have bale processor or other means to chop wheat straw, brome hay, etc.
- ☐ Labor is available to process carcasses and turn compost
- ☐ Location is available for composter
- ☐ Composter site is 100 feet away from production facilities
- ☐ Composter does not pose risk to surface water
- ☐ Manure spreader is available to land apply compost
- ☐ Bucket loader is available for loading and turning compost
- ☐ Land available for spreading finished compost

Rendering

- ☐ Pickup service is available
- ☐ Carcass can be removed without compromising biosecurity
- ☐ Carcass storage area is at least 100 feet from production facilities
- ☐ Carcass storage area is well screened from public view

Evaluate the Economic Factors

After the logistic and environmental factors have been considered, the next step is to compare the cost of disposal methods that otherwise fit a specific situation. Factors which influence costs are the volume of mortality, management, site layout, and size of the production unit.

Disposal costs were estimated for a swine production system that needs to dispose of 40,000 pounds/year or 110 lb./day, as would be the case in a 300 sow farrow to finish

operation with average death losses. The total annual cost as well as the cost per pound of mortality disposed of are the basis for comparison among the alternatives presented in *Table I*. Costs of each method vary from farm to farm, depending on the resources available. Although the example provided may be used as a guideline, cost estimates for a specific operation should be made for the disposal methods that are being considered.

The costs do not include labor or loader use for removing dead animals from the production facility. It is assumed that this would be the same for all alternatives. Labor costs were counted when the method required moving dead animals more than a few yards from the production facility. The cost of labor for all disposal methods was $11/hr, which includes the employer's social security contribution.

Fixed costs in *Table I* include depreciation, interest on the undepreciated balance of the item, repairs, property taxes, and insurance. Fixed costs reflect the annual cost of owning an asset that has a life of more than one year.

Incineration

The incinerator used as a basis for the cost estimate has a 500 pound capacity, is lined, and is thermostatically controlled. The cost of the incinerator, a fuel tank, and fuel lines is $3,642. The incineration rate was assumed to be 78 lb./hr, with fuel consumption at 1 gal/hr. The price of diesel fuel was estimated at $1.10/gal. The cost of electricity was calculated, but it was negligible. The life of the incinerator was estimated at 5,000 hours (approximately 10 years with this size of operation). An interest rate of 10 percent, and an annual repair cost equal to 3 percent of the original investment were used in the calculations. It was assumed that the incinerator would be near the production facility, and no additional labor would be required to move the dead animals to the incinerator. A labor requirement of 10 min./day was assumed for the operation of the incinerator.

An afterburner may be required to reduce emissions from the incinerator. This increases the estimated investment cost by $1,000 and the fuel consumption by 1.35 gal/hr. The costs for an incinerator equipped with an afterburner are also presented in *Table I*.

Composting

Costs were estimated for two types of composting facilities, both having concrete floors and bin walls. The first, a high investment version, includes a roof and sidewalls above the concrete bin walls, as well as a concrete apron in front of the facility *(Figure 3)*. It is a seven-bin facility, with sawdust or other carbon source stored in the seventh bin. Each bin is 10' x 14' with 6' high walls. The estimated construction cost was $15,200. This assumed that the concrete work was hired and the wooden portion was constructed with farm labor.

The second, a low investment version, does not have a roof and sidewalls above the concrete bin walls, does not have the concrete apron in front, and is a six-bin facility *(Figure 4)*. Each bin is 10' x 14' with 5' high walls. With only six bins, the sawdust or other carbon material would need to be stored in a pile outside or in a nearby building. The investment cost of this composting facility was estimated at $7,850.

The useful life of both composters was estimated at 15 years. An interest rate of 10 percent and an annual repair cost of 2 percent of the original investment were used. An estimated 80 cubic yards of sawdust would be needed each year, at a cost of $4/cu yd.

A skid steer loader with a one-half cubic yard bucket would transport dead animals, move sawdust from the storage bin, move material from primary to secondary bins, and load material on the manure spreader. The total cost of using the loader was $10/hr.

The composters were sized so that it would take 90 days to fill a primary bin. The material would remain for an additional 90 days and then be moved to a secondary bin. After 90 days in the secondary bin, one-third of the original volume of sawdust would be recycled and the remainder would be spread. Labor and machine requirements were estimated as follows:

Daily loading with sawdust and dead animals: 1.83 hours of labor per week; 0.67 hours of loader time per week.

Moving material from primary to secondary bin: 1.25 hours of labor and loader time, four times per year.

Moving material to recycling bin and spreading the remainder: 3.67 hours of labor, four times per year; 2 hours of

Table I. Budgeted annual costs for disposing of mortality from a pork production system (40,000 pounds of mortality per year — 300 sow farrow to finish system).

	Incineration without afterburner	*Incineration with afterburner*	*Composting High investment*	*Composting Low investment*	*Rendering Four pickups/week*
Disposal equipment	Incinerator and fuel tank	Incinerator and fuel tank	Compost bins and building	Compost bins	Screen storage area
Capital investment	$3,642	$4,642	$15,200	$7,850	$300
Other equipment needed			Skid Steer Loader Tractor Manure spreader	Skid Steer Loader Tractor Manure spreader	Skid steer loader
Labor hours per year	60.7	60.7	115.0	125.9	60.7
Budgeted Annual Costs					
Fixed costs—disposal equipment	$710.19	$905.19	$2,305.33	$1,190.58	$51.00
Machinery costs					
Fixed			382.19	447.39	364.00
Operating			254.79	298.26	242.67
Other operating costs	572.00	1341.44	320.00	320.00	5,200.00
Labor	667.33	667.33	1,265.15	1,384.68	667.33
Total cost per year	$1,949.52	$2,913.96	$4,527.47	$3,640.92	$6,525.00
Total cost per pound of mortality	$0.049	$0.073	$0.113	$0.091	$0.163

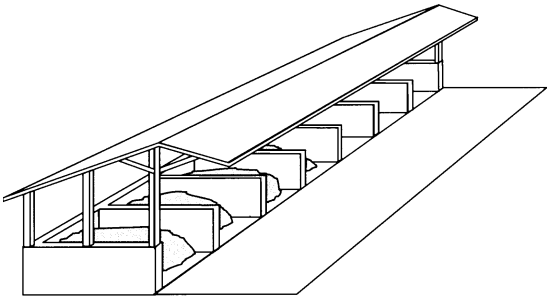

Figure 3. Roofed composting unit (high investment option).

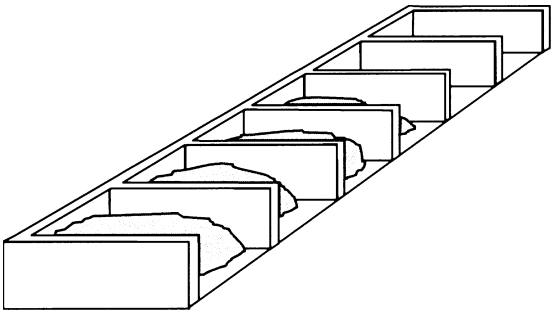

Figure 4. Composting unit (low investment option).

loader time, four times per year; 1.67 hours of tractor and spreader time, four times per year

Labor and machine costs were estimated to be slightly higher for the low investment facility since the carbon source is not stored in the composter.

Rendering

This alternative was budgeted, assuming that rendering service was available at a cost of $25 per pickup, and that there were four pickups per week. A holding area would need to be located away from the production facility to minimize chances of disease transmission. The estimated cost of building a fence to screen the storage area was $300. Since the holding area would be located away from the production facility, an estimated 70 minutes of labor and loader time per week would be required for transporting dead animals to the holding area.

The estimated cost per pound of mortality, based on four pickups per week by the rendering service, is listed in *Table I* as $0.163. Four pickups per week were selected as an average number to ensure that dead animals were disposed of within 36 hours. The number of pickups per week affects the cost per pound of mortality. The cost for one, two, three, five or six pickups per week would cost $.066, $.098/lb, $.131/lb, $.196, and $.228 per pound of mortality, respectively.

Burial

The procedure for properly disposing of dead animals by burying is not well defined. Soil type, topography, distance to wells, depth of groundwater, available equipment, and weather are some of the variables that will influence the type of burial system feasible for a swine operation. Thus, costs for this alternative do not appear in *Table I*.

A budget was developed for a sample burial system to get a general idea of its cost. A trench would be dug once a year to hold one year's mortality. The cost of hiring a backhoe to dig the trench was estimated to be $600. The ditch would need to be braced to prevent cave-in and a safety fence would need to be built around the ditch. Since the burial site would likely be some distance from the production facility, 70 minutes per week of labor and loader time was assumed to be required for transporting dead animals to the burial site. An additional 85 minutes per week of labor and loader time would be required for covering the dead animals with soil.

The estimated cost of the burial alternative was $3,878 per year and $0.097 per pound of mortality. Approximately 135 hours of labor were required per year. While this indicates that burial may be within the range of economic feasibility, it is not recommended for routine disposal.

Comparing the Costs

Based on the assumptions stated for each alternative, the incinerator is the lowest cost alternative, at $.049 per pound of mortality. The incinerator with an afterburner is next, at $.073 per pound of mortality. The composting alternatives follow, at $.091 and $.113. Rendering is the most expensive at $.163 per pound. As stated above, this assumes four pickups per week. If only one or two pickups per week are used, rendering becomes more competitive.

The costs in *Table I* were budgeted based on reasonable assumptions for investment cost, labor, and machine use. As more producers gain experience with systems such as composting, the budgeted costs can be refined.

Making the Decision

Selecting a mortality disposal system is an important decision, as it impacts animal and human health. Several factors should be considered when making this decision. These include logistic factors, such as the quantity of mortality, location of production facilities, soil type, topography, amount of labor available, and access to equipment. The estimated cost of alternative disposal methods for your operation, your attitude toward environmental issues, and management preferences are also important considerations.

Contact the State Veterinarians Office for regulatory information concerning disposal of livestock mortalities, (402) 471-2351. To obtain a Class II incinerator permit, contact the air quality section of NDEQ, (402) 471-2189. For more information on mortality disposal methods contact your local Cooperative Extension educator.

File under: ANIMALS, GENERAL
D-1, Business Management
Revised July 2001, 1,200

Extension is a Division of the Institute of Agriculture and Natural Resources at the University of Nebraska–Lincoln cooperating with the Counties and the United States Department of Agriculture.