University of Nebraska - Lincoln
DigitalCommons@University of Nebraska - Lincoln

CSE Journal Articles | Computer Science and Engineering, Department of

4-1-2005

Survivable Lightpath Provisioning in WDM Mesh Networks Under Shared Path Protection and Signal Quality Constraints

Xi Yang
IEEE

Lu Shen
IEEE

Byrav Ramamurthy
IEEE

Follow this and additional works at: http://digitalcommons.unl.edu/csearticles

Part of the Computer Sciences Commons

Yang, Xi; Shen, Lu; and Ramamurthy, Byrav, "Survivable Lightpath Provisioning in WDM Mesh Networks Under Shared Path Protection and Signal Quality Constraints" (2005). *CSE Journal Articles.* Paper 69.
http://digitalcommons.unl.edu/csearticles/69

This Article is brought to you for free and open access by the Computer Science and Engineering, Department of at DigitalCommons@University of Nebraska - Lincoln. It has been accepted for inclusion in CSE Journal Articles by an authorized administrator of DigitalCommons@University of Nebraska - Lincoln.

Survivable Lightpath Provisioning in WDM Mesh Networks Under Shared Path Protection and Signal Quality Constraints

Xi Yang, *Member, IEEE*, Lu Shen, *Student Member, IEEE*, and Byrav Ramamurthy, *Member, IEEE*

***Abstract*—This paper addresses the problem of survivable lightpath provisioning in wavelength-division-multiplexing (WDM) mesh networks, taking into consideration optical-layer protection and some realistic optical signal quality constraints. The investigated networks use sparsely placed optical–electrical–optical (O/E/O) modules for regeneration and wavelength conversion. Given a fixed network topology with a number of sparsely placed O/E/O modules and a set of connection requests, a pair of link-disjoint lightpaths is established for each connection. Due to physical impairments and wavelength continuity, both the working and protection lightpaths need to be regenerated at some intermediate nodes to overcome signal quality degradation and wavelength contention. In the present paper, resource-efficient provisioning solutions are achieved with the objective of maximizing resource sharing. The authors propose a resource-sharing scheme that supports three kinds of resource-sharing scenarios, including a conventional wavelength-link sharing scenario, which shares wavelength links between protection lightpaths, and two new scenarios, which share O/E/O modules between protection lightpaths and between working and protection lightpaths. An integer linear programming (ILP)-based solution approach is used to find optimal solutions. The authors also propose a local optimization heuristic approach and a tabu search heuristic approach to solve this problem for real-world, large mesh networks. Numerical results show that our solution approaches work well under a variety of network settings and achieves a high level of resource-sharing rates (over 60% for O/E/O modules and over 30% for wavelength links), which translate into great savings in network costs.**

***Index Terms*—Optical networks, physical impairments, routing and wavelength assignment, shared path protection, signal quality, sparse O/E/O regeneration, static lightpath establishment (SLE), survivable lightpath provisioning, wavelength-division multiplexing (WDM).**

I. Introduction

WAVELENGTH-DIVISION multiplexing (WDM) technology has been widely used to increase link capacity for point-to-point connections. With advances in optical switching technologies, a next-generation optical backbone or metro network will employ wavelength routing to provide wavelength-level connections that cross multiple nodes and links in a mesh topology. Such a network faces the high risk of losing large amounts of data due to failure. Service providers have to use backup or redundant network resources to protect their networks against this risk. On the other hand, efficiently utilizing network resources is among the top priorities for service providers. They need to reduce their investment by using a minimum number of redundant resources. This paper addresses the problem of survivable lightpath provisioning in a resource efficient manner. Incorporated into this problem are some signal quality constraints that are important for practical network operations.

It will be ideal if all-optical lightpaths could be provisioned in a network of arbitrary topology, between any pair of nodes, and without concern for signal quality. However, in the current phase, a wavelength-routed network must face the technical difficulties in overcoming the physical impairments introduced by optical fibers and optical components such as erbium-doped fiber amplifiers (EDFA) and optical cross connects (OXCs). Physical impairments, e.g., power loss, noises, and dispersions, impose fundamental constraints on the quality of signals in WDM optical networks [1]. Only through 3R regeneration (reamplification, reshaping, and retiming) can a lightpath be recovered from those impairments and be transported farther. In the near future, only optical–electronic–optical (O/E/O) conversion can realize the 3R regeneration. O/E/O conversion is also used for wavelength conversion to resolve wavelength contention. Wavelength contention occurs when two lightpaths using the same wavelength are transmitted onto the same fiber. Because all-optical wavelength converters are still immature, O/E/O wavelength conversion becomes a viable alternative, which converts one wavelength into an electronic signal and then converts it back onto another wavelength.

Although O/E/O conversion is indispensable in optical transport networks, it takes up a major fraction of network cost. This is particularly true if the network is *opaque* [2], which means that O/E/O conversion is used for every wavelength at every node. In [2], a *translucent* network architecture was proposed to mitigate this cost. In a translucent WDM mesh network, a technique called *sparse O/E/O regeneration* is used to place O/E/O modules sparsely across the network. Sparse O/E/O regeneration makes use of the O/E/O modules sparsely distributed in the network rather than assigning an O/E/O module to each input wavelength at each network node. With sparse O/E/O regeneration, an optical signal is made to travel as long as possible before its signal

Manuscript received January 13, 2004; revised December 27, 2004. This work was supported in part by the National Science Foundation (NSF) under Grant ANI-0074121 and Grant EPS-0091900. An earlier version of this paper appeared in the *Proceedings of OSA Optical Fiber Communications (OFC 2004) Conference*, Los Angeles, CA, February 2004.

X. Yang was with the University of Nebraska–Lincoln, Lincoln, NE 68588-0115 USA. He is now with the Information Sciences Institute (East) of the University of Southern California, Arlington, VA 22203 USA (e-mail: xyang@isi.edu).

L. Shen and B. Ramamurthy are with the Department of Computer Science and Engineering, University of Nebraska–Lincoln, Lincoln, NE 68588-0115 USA (e-mail: lshen@cse.unl.edu; byrav@cse.unl.edu).

Digital Object Identifier 10.1109/JLT.2005.844495

0733-8724/$20.00 © 2005 IEEE

quality falls below a threshold or wavelength contention occurs. Previous studies showed that this technique could save up to 80% on O/E/O cost in some medium-sized networks [3].

The optical-layer protection in a WDM mesh network with sparse O/E/O regeneration is more complicated. Generally, there are two categories of protection: path-based protection and link-based protection [4]. In this paper, path-based protection is considered, which many previous studies found to be easier to implement in the current phase [5], [6]. In path-based protection, a protection path is used to prevent the services on the working path from disruption. The working path and protection path must be diverse to avoid any single point of failure, e.g., a fiber cut. To handle single-link failures, survivable lightpath provisioning provides a pair of link-disjoint lightpaths for each connection request. The protection lightpaths usually use redundant network resources. Sharing those resources on protection lightpaths will not interfere with services on working lightpaths. For example, a wavelength link can be allocated to more than one protection lightpath if their working paths are link-disjoint (a wavelength link represents a wavelength on a certain link). In a WDM mesh network with sparse O/E/O regeneration, both working and protection lightpaths could be allocated some O/E/O modules to satisfy the signal quality constraints. Under shared path protection, these O/E/O modules are very limited resources and should also be shared as much as possible.

To summarize, the problem of survivable lightpath provisioning in WDM mesh networks with sparse O/E/O regeneration is equivalent to a static lightpath establishment (SLE) problem under three fundamental categories of constraints: the signal quality constraints, the wavelength continuity constraints, and the path diversity constraints. A practical approach for solving this problem should minimize the use of network resources, viz. wavelength links and O/E/O modules.

The basic SLE problem without protection and O/E/O conversion has already been proven to be NP-complete in [7]. In the literature, several integer linear programming (ILP) formulations for SLE problems have been given [8]–[10]. The ILP formulations that combine SLE with path-based protection were given in [4], [6], [11]–[13]. Solving the ILP problems based on the combined formulations has been shown to be extremely time consuming [13]. Those problems were usually solved in several stages, each dealing with separate routing, wavelength assignment, and protection path establishment subproblems. Such a divide-and-conquer approach provides practical solutions in a reasonable time. For example, the work in [4], [11], and [13] used alternate working paths as inputs for the ILP formulations to reduce the complexity, and the work in [6] used the Lagrangean relaxation technique to solve the ILP formulations. In addition, several heuristics for SLE with path-based protection were given in [6], [12], and [13]. In [14], we presented the ILP formulations and a TSH for the SLE problem under hybrid path protection constraints, including multiple classes of shared risk link group (SRLG)-diverse constraints and path length constraints.

Some signal quality constraints on optical signal-to-noise ratio (OSNR) have already been considered by previous studies on survivable translucent network design problems [15], [16]. Those studies focused on how to place O/E/O modules sparsely in the networks to accommodate regeneration and wavelength conversion by using some traffic-prediction-based heuristics. However, the placement based on traffic prediction may not precisely capture the future traffic patterns, which usually change after network construction. Because network resources will remain constant for a long time, it is important for service providers to efficiently utilize the existing network resources to provision as many lightpaths as possible, each being properly regenerated and wavelength converted.

This paper addresses two issues, on which, to the best of the authors' knowledge, no prior work has been done. First, signal quality constraints are integrated into the survivable lightpath provisioning problem that considers shared path protection. Two common linear signal quality constraints, viz. the constraint on polarization-mode dispersion (PMD) and the constraint on amplified spontaneous emission (ASE) noise, whose models will be described in Section II, are considered. The problem is formulated into a single ILP problem. The formulation is mathematically challenging and considers new constraints that have not been considered in previous work. Second, a resource-sharing scheme is proposed to support three kinds of resource-sharing scenarios. Previous studies have proposed to minimize the use of wavelength links [4], [6], [13]–[15] by sharing some of them between protection paths, which corresponds to first scenario. Two new scenarios are proposed, where O/E/O modules are shared between the working and protection paths of the same connection as well as between different protection paths. Both ILP and heuristic approaches are employed to minimize the number of used wavelength links and O/E/O modules to boost network resource utilization.

The remainder of this paper is organized as follows. Section II presents the network model, the optical signal quality constraints, and the resource-sharing scheme. Section III provides the problem definition and the ILP formulation. Section IV describes a local optimization heuristic and a TSH. Section V presents numerical results. Section VI concludes the work.

II. Network Model

In this paper, we consider wavelength-routed mesh networks with the capability of sparse O/E/O regeneration. Such a network consists of a number of wavelength-routing nodes with optional O/E/O modules and interconnected by optical fiber links. We assume that each link has a single fiber in each direction, while each fiber has a fixed number of wavelengths that are used to carry data. Each node has a fixed number of add and drop ports, through which the user data can access the network.

A. Node Model and Sparse O/E/O Regeneration

The node model is illustrated in Fig. 1. The wavelengths on the incoming fiber links are demultiplexed and switched by the wavelength routing switches (WRS) and then are multiplexed onto the outgoing fiber links. Each WRS can switch a certain wavelength in a nonblocking manner. We assume that a node can add and drop any wavelengths when it has sufficient transmitters (Tx) and receivers (Rx). Optional electronic 3R regenerators can be attached between some transmitters and receivers to facilitate regeneration and wavelength conversion. We define the combination of a transmitter, a receiver, and an electronic 3R

regenerator as an O/E/O module. The number of O/E/O modules at a node is fixed, but this number may vary from one node to another node. Some nodes do not have any O/E/O module, and only allow for add and drop of wavelengths.

The sparse O/E/O regeneration process is described as follows. A lightpath starts from a transmitter at the source node and terminates to a receiver at the destination node. The node model described previously allows for both all-optical switching and O/E/O regeneration when O/E/O modules are present at some intermediate nodes. When a lightpath is routed through the intermediate O/E/O modules at some selected intermediate nodes, it is divided into several fragments by O/E/O regeneration. We define such a fragment as a regeneration segment. As a special case, we consider a fully transparent lightpath as a single regeneration segment. Each regeneration segment consists of one or more consecutive fiber links and is subject to the wavelength continuity constraint, i.e., all fiber links on the regeneration segment must use the same wavelength. Wavelengths on two regeneration segments may be different.

B. Linear Signal Quality Constraints

The optical signal on each regeneration segment is subject to signal quality constraints. In this paper, we consider the two linear constraints on PMD and ASE noise. PMD and ASE noise are also recommended in a latest Internet Engineering Task Force (IETF) draft as the two key linear impairments that can be practically used to constrain optical-layer routing [17]. Optical power attenuation can be compensated by appropriate placement of amplifiers so that we can safely ignore its impact. We also ignore polarization-dependent loss (PDL), chromatic dispersion, crosstalks due to switching and multiplexing, nonlinear effects, and other impairments.

PMD is caused by the time delay between two orthogonal polarizations of light traveling at different speeds through an optical fiber. The PMD value on a regeneration segment is expressed as [18]:

$$\Delta t_{\mathrm{PMD}} = \sqrt{\sum_{k=1}^{M} D_{\mathrm{PMD}}^2(k) \cdot L(k)} \tag{1}$$

where M is the number of links along the regeneration segment, k is the link index, and $D_{\mathrm{PMD}}(k)$ is the fiber dispersion parameter at the kth optical link that has a length $L(k)$. Typically, $D_{\mathrm{PMD}}(k)$ has a value ranging from 0.1 to 0.5 ps/$\sqrt{\mathrm{km}}$ depending on the fiber technology used on the link [18]. The constraint on PMD is expressed as [18]

$$\Delta t_{\mathrm{PMD}} \leq \frac{\alpha}{B} \tag{2}$$

where B is the digital bit rate of the signal and α is the maximum dispersion fraction in a bit interval that is acceptable for the receiver. A typical value for α is 0.1 [18].

If we instead use a constraint on the squared PMD value $\Delta t_{\mathrm{PMD}}^2$, it will have a linear relation with the value $D_{\mathrm{PMD}}^2(k) \cdot L(k)$ on each link. This constraint is expressed as

$$\sum_{k=1}^{M} D_{\mathrm{PMD}}^2(k) \cdot L(k) \leq \left(\frac{\alpha}{B}\right)^2. \tag{3}$$

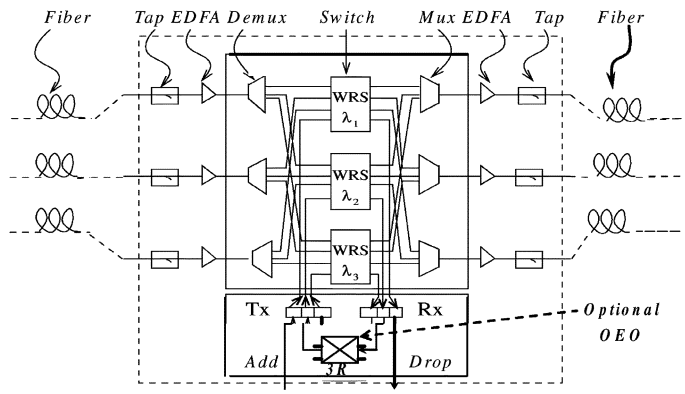

Fig. 1. Node model with wavelength-routing switches and optional O/E/O modules.

ASE is the dominant noise source in optical networks. The more amplifiers (EDFAs) an optical signal traverses, the higher ASE noise power it suffers from. Each node has EDFAs at both input and output ports (as shown in Fig. 1). Additional EDFAs (inline amplifiers) should be placed in the middle of a fiber when it is long enough. The longer a regeneration segment is, the more EDFAs it needs to compensate the power loss. The ASE noise power of an EDFA can be expressed as [19]

$$P_{k,j}^{\mathrm{ASE}} = n_{\mathrm{sp}}(k,j) \cdot (G(\lambda_k, j) - 1) \cdot h \cdot \nu_k \cdot B_O \tag{4}$$

where $n_{\mathrm{sp}}(k,j)$ is the spontaneous emission factor of the jth EDFA on the kth fiber link along a regeneration segment,$G(\lambda_k, j)$ is the saturated gain, $\lambda_k = c/\nu_k$ is the assigned wavelength, h is the Planck's constant, c is the velocity of light, and B_O is the optical bandwidth. Different wavelengths on the same link have slightly different ASE noise powers. By ignoring such a difference, the ASE noise power on a regeneration segment has a linear relation with the ASE noise power on each link along that segment. The constraint is expressed as

$$\sum_{k=1}^{M} \left(\sum_{j \in \mathrm{Link}(k)} n_{sp}(k,j) \cdot (G(\lambda, j) - 1) \cdot h \cdot \nu \cdot B_O \right) \leq P_{\max}^{\mathrm{ASE}} \tag{5}$$

where $P_{\max}^{\mathrm{ASE}}$ is the maximum allowed ASE noise power, and λ and ν are constants.

Note that the constraints on PMD and ASE noise cannot be replaced by a single lightpath length constraint, because the equations above show that PMD and ASE are not dependent on lightpath length alone. In our approach, we assume that PDM and ASE noise values on each fiber links are given and treat them as two independent constraints for a lightpath.

C. Resource Sharing Scheme

In our network model, a pair of link-disjoint lightpaths is provided for each connection, and O/E/O regeneration may be used on both working and protection lightpaths. Our study shows that not only can wavelength links be shared, but the O/E/O modules can also be shared by the protection paths if their working paths are link-disjoint. In addition, O/E/O regenerators can be shared between a working path and its protection path. This is because the working and protection paths do not need O/E/O regeneration at the same time. Only if a link failure occurs (note that we

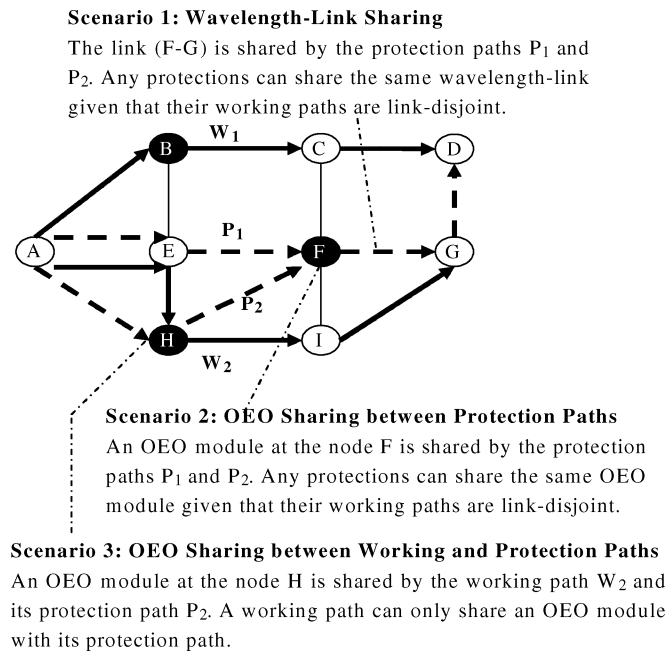

Fig. 2. Illustration of our resource-sharing scheme and three kinds of resource-sharing scenarios.

do not consider node failures) should an O/E/O regenerator that was assigned to the working path be used by the corresponding protection path.

In Fig. 2, we illustrate our resource-sharing scheme in a WDM mesh network with shared path protection and sparse O/E/O regeneration. In this illustration, two connections are created from the node A to D and from A to G. Their working and protection paths are labeled with W_1, W_2 and P_1, P_2, respectively. Our resource-sharing scheme supports three kinds of resource-sharing scenarios, which are described in Fig. 2. First, we may share a wavelength link between some protection lightpaths, provided that their working paths do not traverse the same link. In Fig. 2, the two protection lightpaths P1 and P2 share the same wavelength on the link (F, G). Second, we may share an O/E/O module between the working and protection lightpaths of the same connection. In Fig. 2, a black node represents an O/E/O module that is used at the node. At the node H, an O/E/O module is shared between the working lightpath W2 and protection ligthpath P2 of the connection A–G. Third, we may share an O/E/O module between the protection lightpaths of different connections. In Fig. 2, an O/E/O module at the node F is shared between the protection lighpaths P1 and P2. In the remainder of this paper, we will present solution approaches to maximize the resource sharing based on these three sharing scenarios.

III. Problem Formulation

A. Problem Definition

We use a directed graph to represent a WDM mesh network as follows:

1) Each vertex of the graph represents a network node.
2) Each node is associated with a number, representing the number of O/E/O modules.
3) Each directed edge represents a fiber link that has a fixed number of wavelengths.
4) Each fiber link is associated with a number, representing the link length.
5) Each fiber link is associated with two real numbers, representing the value of $D^2_{\mathrm{PMD}}(k) \cdot L(k)$ and the ASE noise power, respectively.

In the remainder of this paper, we use path to represent lightpath and use link to represent fiber link. Two paths are said to be diverse if they do not traverse a common link. A connection request is a demand for a wavelength service. We allow for multiple connections between a pair of source and destination nodes.

Our problem is defined as follows.

1) ***Given***: A network topology and a set of connection requests.
2) ***Objective***: To minimize the number of O/E/O modules and wavelength links consumed by all the connection requests.
3) ***Constraints***:
   a) Each connection request is assigned a working path, which consists of a series of consecutive regeneration segments.
   b) Protection requirements of each connection request are satisfied:
      i) Assign a protection path that is link-disjoint with its working path. The protection path also consists of a series of consecutive regeneration segments.
      ii) Assign a wavelength to each regeneration segment. (A regeneration segment is subject to wavelength continuity constraint.)
      iii) The wavelength on a certain link can be shared with other protection paths if the working path of this connection is diverse with all other working paths protected by this wavelength.
      iv) The protection path can share the O/E/O modules with its working path. An O/E/O module can also be shared with other protection paths if the working paths protected by those protection paths are diverse with the working path of this protection path.
   c) The number of used O/E/O modules at a node is no more than the total number of O/E/O modules at that node.
   d) The number of used wavelengths on a link is no more than the total number of wavelengths on that link.
   e) The squared PMD value and ASE noise power of each regeneration segment on both working and protection paths are bounded by Inequalities (3) and (5).

In some situations, the objectives of minimizing the number of O/E/O modules and minimizing the number of wavelength links may conflict. We let minimizing the number of O/E/O modules take the first priority first because O/E/O modules are

more limited and expensive resources and second because a lightpath using fewer O/E/O conversions normally has a shorter path length, which is not totally against the objective of minimizing the number of wavelength links.

B. ILP Formulation

1) Notation:

$G(V,E)$	Directed graph G, where V is the set of nodes and E is the set of links.
R_j	The number of O/E/O modules at the node $j \in V$. It is constant for a specific node, but may vary among different nodes. $R_j = 0$, if no O/E/O conversion is available at the node j.
k	The O/E/O module identifier. $1 \le k \le R_j$ at the node j.
W	The number of wavelength on each link.
w	A wavelength number and $1 \le w \le W$
X	The maximum number of connections between each pair of nodes.
(s,d,x)	The connection identifier, where s denotes the source node, d denotes the destination node, and x distinguishes different connections between the same pair of source and destination nodes.
(i,j)	A link in $G(V,E)$, where $(i,j) \in E$.
$(u \rightarrow v)$	A regeneration segment from the node u to v.
$\lambda_{s,d,x}$	A manual input. 1, if a connection request on (s,d,x) exists; 0, otherwise.
$F_{i,j,w}^{s,d,x}$	1, if the working path of the connection (s,d,x) uses the wavelength w on the link (i,j); 0, otherwise.
$m_{i,j}^{w}$	1, if the wavelength w on the link (i,j) is utilized by some protection paths; 0, otherwise.
$\alpha_{j,k}^{s,d,x}$	1, if the kth O/E/O module at the node j is allocated to the working path of the connection (s,d,x); 0, otherwise.
$\beta_{p,q,j,k}^{s,d,x}$	1, if the kth O/E/O module at the node j is allocated to the protection path of the connection (s,d,x) under the failure of the link (p,q); 0, otherwise.
$\gamma_{j,k}$	1, if the kth O/E/O module on the node j is allocated; 0, otherwise.
$\omega_{u,v}^{s,d,x}$	1, if $(u \rightarrow v)$ is a regeneration segment along the working path of the connection (s,d,x); 0, otherwise.
$\pi_{i,j,u,v}^{s,d,x}$	1, if (i,j) is a link on the regeneration segment $(u \rightarrow v)$ along the working path of the connection (s,d,x); 0, otherwise.
$\tau_{i,j}^{2}$	A constant representing the squared PMD value (i.e., $D_{\mathrm{PMD}}^{2}(i,j) \cdot L(i,j)$) on the link (i,j).
$p_{i,j}^{ASE}$	A constant representing the ASE noise power on the link (i,j).

2) Objective:

$$\mathrm{Min}\ \Delta \times \sum_{\forall j \in V} \sum_{1 \le k \le R_j} r_{j,k} + \sum_{1 \le w \le W} \sum_{\forall (i,j) \in E} \left(\sum_{\forall s,d \in V} \sum_{1 \le x \le X} F_{i,j,w}^{s,d,x} + m_{i,j}^{w} \right).$$

We set the multiplier Δ to be $W \times |E|$, the maximum number of wavelength links in the network, to ensure that minimizing the number of O/E/O modules takes priority over minimizing the number of wavelength links.

3) Constraints:

a) Wavelength-link shared path protection constraints: The constraints on wavelength-link shared path protection are similar to the combined work in [11]–[13] and [15], which describe flow-conservation and wavelength continuity constraints on working and protection paths and dictate the relationships between working and protection paths and between their corresponding wavelength links. We ignore the details of these constraints to reduce the size of the formulation.

b) O/E/O sharing constraints: Equation/Inequalities (6)–(14) are the additional constraints indicating that the kth O/E/O module at the node j is allocated to some connections and is allowed to be shared between the working and protection paths of the same connection as well as between the protection paths of different connections.

- Constraints indicating that the kth O/E/O module at the node j can be shared among some working and protection paths:

$$\gamma_{j,k} \le \sum_{\forall s,d \in V, 1 \le x \le X} \left(\alpha_{j,k}^{s,d,x} + \sum_{(p,q) \in E} \beta_{p,q,j,k}^{s,d,x} \right), \quad \forall j \in V, 1 \le k \le R_j \tag{6}$$

$$|V|^2 \times X \times (1 + |E|) \times \gamma_{j,k} \ge \sum_{\forall s,d \in V, 1 \le x \le X} \left(\alpha_{j,k}^{s,d,x} + \sum_{(p,q) \in E} \beta_{p,q,j,k}^{s,d,x} \right), \quad \forall j \in V, 1 \le k \le R_j. \tag{7}$$

- The working paths of any two connections should not use the same O/E/O module:

$$\sum_{\forall s,d \in V, 1 \le x \le X} \alpha_{j,k}^{s,d,x} \le 1, \quad \forall j \in V, 1 \le k \le R_j. \tag{8}$$

- The protection paths, with working paths subject to the same link failure, cannot share the same O/E/O module:

$$\sum_{\forall s,d \in V, 1 \le x \le X} \beta_{p,q,j,k}^{s,d,x} \le 1, \quad \forall j \in V, \forall (p,q) \in E, 1 \le k \le R_j. \tag{9}$$

- The working and protection paths of two different connections should not share the same O/E/O module:

$$\alpha_{j,k}^{s,d,x} + \sum_{\forall (s',d',x') \ne (s,d,x)} \beta_{p,q,j,k}^{s',d',x'} \le 1, \quad \forall s,d,j \in V, 1 \le x \le X, 1 \le k \le R_j, \forall (p,q) \in E. \tag{10}$$

- Constraints excluding allocation of O/E/O modules at the source and destination nodes of the connection (s,d,x):

$$\alpha_{s,k}^{s,d,x} = 0, \forall s,d \in V, 1 \le x \le X, 1 \le k \le R_s \tag{11}$$

$$\alpha_{d,k}^{s,d,x} = 0, \forall s,d \in V, 1 \le x \le X, 1 \le k \le R_d \quad (12)$$

$$\beta_{p,q,s,k}^{s,d,x} = 0, \forall s,d \in V, \forall (p,q) \in E, 1 \le x \le X, 1 \le k \le R_s \quad (13)$$

$$\beta_{p,q,d,k}^{s,d,x} = 0, \forall s,d \in V, \forall (p,q) \in E, 1 \le x \le X, 1 \le k \le R_d. \quad (14)$$

c) Signal quality constraints on working paths: Equation/Inequalities (15)–(23) are the constraints that identify which regeneration segment along the working path of the connection (s,d,x) the link (i,j) belongs to and guarantee the signal quality for each regeneration segment. Constraints (15)–(21) assign $\omega_{u,v}^{s,d,x} = 1$ if and only if $(u \to v)$ is a regeneration segment along the working path of the connection (s,d,x), while assigning $\pi_{i,j,u,v}^{s,d,x} = 1$ if and only if (i,j) is a link on that segment.

- Constraints indicating whether $(u \to v)$ is a regeneration segment on the working path of the connection (s,d,x):

$$2\omega_{u,v}^{s,d,x} \le \begin{cases} 2\lambda_{s,d,x}, & \text{if } u = s, v = d \\ \lambda_{s,d,x} + \sum\limits_{1 \le k \le R_v} \alpha_{v,k}^{s,d,x}, & \text{if } u = s, v \ne d \\ \sum\limits_{1 \le k \le R_u} \alpha_{u,k}^{s,d,x} + \lambda_{s,d,x}, & \text{if } u \ne s, v = d \\ \sum\limits_{1 \le k \le R_u} \alpha_{u,k}^{s,d,x} + \sum\limits_{1 \le k \le R_v} \alpha_{v,k}^{s,d,x}, & \text{if } u \ne s, v \ne d \end{cases}$$
$$\forall s,d,u,v \in V, 1 \le x \le X \quad (15)$$

$$\sum_{\forall v \in V} \omega_{s,v}^{s,d,x} = \lambda_{s,d,x}, \forall s,d \in V, 1 \le x \le X \quad (16)$$

$$\sum_{\forall u \in V} \omega_{u,d}^{s,d,x} = \lambda_{s,d,x}, \forall s,d \in V, 1 \le x \le X \quad (17)$$

$$\sum_{\forall u \in V} \omega_{u,v}^{s,d,x} - \sum_{\forall y \in V} \omega_{v,y}^{s,d,x} = 0, \forall s,d \in V, \forall v \in V: v \ne s,d, 1 \le x \le X \quad (18)$$

$$\sum_{\forall u,v \in V} \omega_{u,v}^{s,d,x} = \sum_{\forall j \in V} \sum_{1 \le k \le R_j} \alpha_{j,k}^{s,d,x} + \lambda_{s,d,x}, \forall s,d \in V, 1 \le x \le X. \quad (19)$$

- Constraints indicating whether the link (i,j) is on the regeneration segment $(u \to v)$ along the working path of the connection (s,d,x):

$$\pi_{i,j,u,v}^{s,d,x} \le \sum_{1 \le w \le W} F_{i,j,w}^{s,d,x}, \forall s,d,u,v \in V, \forall (i,j) \in E, 1 \le x \le X \quad (20)$$

$$\sum_{(i,j) \in E} \pi_{i,j,u,v}^{s,d,x} - \sum_{(j,e) \in E} \pi_{j,e,u,v}^{s,d,x} = \begin{cases} \omega_{u,v}^{s,d,x}, & \text{if } j = v \\ -\omega_{u,v}^{s,d,x}, & \text{if } j = u \\ 0, & \text{otherwise,} \end{cases} \forall s,d,u,v,j \in V, 1 \le x \le X. \quad (21)$$

- Constraints on signal quality, viz. PMD and ASE noise, of each regeneration segment along the working path of the connection (s,d,x) (see inequalities (3) and (5)):

$$\sum_{(i,j) \in E} \pi_{i,j,u,v}^{s,d,x} \times \tau_{i,j}^2 \le \left(\frac{\alpha}{B}\right)^2, \forall s,d,u,v \in V, 1 \le x \le X \quad (22)$$

$$\sum_{(i,j) \in E} \pi_{i,j,u,v}^{s,d,x} \times p_{i,j}^{\text{ASE}} \le P_{\max}^{\text{ASE}}, \forall s,d,u,v \in V, 1 \le x \le X. \quad (23)$$

d) Signal quality constraints on protection paths: In our formulation, we need the constraints that identify which regeneration segment along the protection path of the connection (s,d,x) the link (i,j) belongs to and guarantee the signal quality for each regeneration segment. We ignore the details of these constraints to reduce the size of the ILP formulation, because these constraints are very similar to Equations/Inequalities (15)–(23).

IV. Heuristic Solution Approaches

The ILP formulation presented in Section III-B is very complex. For example, the formulation for a six-node, two-wavelength network under four connection requests has 19 582 variables and 23 872 constraints. Although solving the ILP problems is still possible for some small-sized networks, it is not practical for the problems in real-world, large-sized networks. We develop a local optimization heuristic and a TSH to solve those larger scaled problems. Both heuristics need to find an initial solution, in which each connection request is tentatively assigned a pair of working and protection paths with corresponding wavelengths and O/E/O modules. In this section, we first present the procedure for finding an initial solution and then describe the design of our proposed heuristics.

A. Finding an Initial Solution

The initial solution is found by employing the divide-and-conquer and greedy principles. We provision all connection requests one by one according to the descending order of the length of their shortest paths. To increase the chance of success, k-shortest paths are chosen as the candidates for the working path of each connection. Then, a provisioning procedure is called using one of the k-shortest paths as input. This provisioning procedure is called on the k candidate working paths one by one until it succeeds.

Fig. 3 presents the design of the provisioning procedure. Given the working path of a connection request, another set of k-shortest paths is chosen as the candidates for its protection path. Then, the greedy wavelength and O/E/O assignment algorithm (shown in Fig. 4) is used to assign wavelengths and O/E/O modules along the working and protection paths.

We use Yen's k-shortest path algorithm [20] in our heuristics. It operates on a weighted graph, in which each link is assigned

Provisioning Procedure

Input: The candidate working path for a connection request and the current network resource usage information.

1 Use the greedy wavelength and OEO assignment algorithm (shown in Figure 4) to assign wavelength and OEO modules for the candidate working path.
2 If Step 1 fails, return *failure*. Otherwise, go to step 3.
3 Assign a weight to each link in the graph using Equation (51).
4 Find *k-shortest* paths as candidate protection paths based on the weighted graph, and for each path, do the following:
   a. Use the greedy wavelength and OEO assignment algorithm (see Figure 4) to assign wavelengths and OEO modules along the path.
   b. If Step 4.a succeeds, return *success*.
5 Return *failure*.

Fig. 3. Provisioning procedure.

Greedy Wavelength and OEO Assignment Algorithm

Input: A path (*n(s),...,n(i),...,n(d)*), starting at the source node *n(s)* and terminating at the destination node *n(d)*.

1 Along the input path, find the farthest node from *n(s)* (excluding *n(s)*), say *n(i)*, that allows the First-Fit method to assign a wavelength from *n(s)* to *n(i)*, while satisfying all the signal quality constraints, i.e. Inequalities (3) and (5), on the path segment (*n(s), ... n(i)*). If *i* = *d*, succeeds. If no such node exists, fails. Otherwise, go to Step 2.
2 If the input path is a working path, do:
   a. Find the farthest node from *n(s)* along the segment (*n(s), ... n(i)*) (excluding *n(s)*), say *n(m)*, which has available OEO modules. If no such node exists, fails.
   b. Use the First-Fit method to assign wavelength along the path (*n(s), … n(m)*) and assign the first available OEO module on node *n(m)* to the connection.
3 If the input path is a protection path:
   a. Find the farthest node from *n(s)* along the segment (*n(s), … n(i)*) (excluding *n(s)*), say *n(m)*, which has sharable OEO modules
   b. If no such node exists, find the farthest node from *n(s)* (excluding n(s)) which has free OEO modules. If no such node exists, fails.
   c. Use First-Fit method to assign a wavelength (either a sharable or an available wavelength) along path (*n(s), … n(m)*) and assign the first sharable available OEO module on *n(m)* to the path (if no sharable one exists, assign the first free OEO module).
4 Apply the greedy wavelength and OEO assignment algorithm recursively on the path segment (*n(m), … n(d)*).

Fig. 4. Greedy wavelength and O/E/O assignment algorithm.

a weight value. Equation (24) gives the link-weight function for calculating the k-shortest candidate working paths:

$$w(i,j)=\begin{cases}\left(1-\frac{f(j)-1}{R_j}\right)\cdot\left(1-\frac{a(i,j)-1}{W}\right)\cdot l(i,j), & R_j\neq 0\\ 2\cdot\left(1-\frac{a(i,j)-1}{W}\right)\cdot l(i,j), & R_j=0\end{cases} \tag{24}$$

where $w(i,j)$ is the weight assigned to the link (i,j); $f(j)$ and R_j denote the number of available and the number of total O/E/O modules at the node j, respectively; $a(i,j)$ and W denote the number of available and the number of total wavelengths on the link (i,j), respectively; and $l(i,j)$ is the link length. The link-weight function for calculating the k-shortest candidate protection paths is given in (25):

$$w(i,j)=\begin{cases}\left(1-\frac{f(j)-1}{R_j}\right)\cdot\left(1-\frac{s(j)-1}{R_j}\right)\\ \quad\cdot\left(1-\frac{a(i,j)-1}{W}\right)\cdot l(i,j), & R_j\neq 0 \text{ and } (\mathrm{i},\mathrm{j})\notin \mathrm{P}\\ 4\cdot\left(1-\frac{a(i,j)-1}{W}\right)\cdot l(i,j), & R_j=0 \text{ and } (\mathrm{i},\mathrm{j})\notin \mathrm{P}\\ \infty, & (i,j)\in P\end{cases} \tag{25}$$

where P represents the working path of this connection request, $s(j)$ denotes the number of O/E/O modules on the node j that has been used by other connections but can be shared by this connection, and $(i,j)\in P$ means that the link (i,j) is on the working path P.

In both link-weight functions (24) and (25), the factors $1-(f(j)-1)/R_j$ and $1-(a(i,j)-1)/W$ are used to facilitate the k-shortest path algorithm to select those links with more available O/E/O modules and more available wavelengths, respectively. When the number of available resources, $f(j)$ or $a(i,j)$, increases, the weight deceases. In both factors, the denominator normalizes the weight while -1 in the numerator avoids a zero weight. The link length $l(i,j)$ is used as a factor to reduce the path length. With same resource availability, the shorter path is preferred. In the weight functions, if $R_j=0$, only wavelength availability is counted, and the link weight is multiplied by 2 (in (24)) or 4 (in (25)) as a penalty on missing of O/E/O modules. In (25), the factor $s(i)$ is added to favor the links with more sharable O/E/O modules for protection paths. The link weight equals to infinite if the link has already been taken by the working path.

B. Local Optimization Heuristic (LOH)

The divide-and-conquer and greedy methods help find a feasible initial solution. However, there still exists substantial scope of improvement over the initial solution. We develop a local optimization heuristic (LOH) approach to improve the initial solution, whose principle is similar to that of the heuristics presented in [6] and [13].

Our LOH improves the initial solution by reconfiguring some connections iteratively. The reconfiguration of a connection means to release the resources consumed by this connection and to provision alternate resources to recreate it. In one iteration of LOH, we first use a reconfiguration evaluation procedure on each existing connection to examine the objective value (see Section III-B-2) improvement that can be achieved by reconfiguring this connection. Then, the connection that has been evaluated to generate the most amount of improvement is chosen to be reconfigured. LOH executes a number of such iterations until no improvement on the objective value can be obtained. Each iteration starts from the new solution obtained in the previous iteration. The reconfiguration evaluation procedure is shown in Fig. 5.

LOH will stop at local optima, which exist in a local search region close to the initial solution. The success of this heuristic therefore depends on a good initial solution and the value of k (for k-shortest paths). We may use a larger k in the k-shortest path algorithm to expand the local search region. However, a large value of k significantly increases the running time. In the

Reconfiguration Evaluation Procedure

Input: A connection and current network resource usage information.

1 Release network resources used by this connection.
2 Assign a weight to each link according to Equation (50) and find *k-shortest* paths on the weighted graph as the candidate working paths of this connection.
3 For each candidate working path, do the following:
  a. Apply the greedy wavelength and OEO assignment algorithm (shown in Figure 4) on this path. If succeeds, go to Step 3.b. Otherwise, continue Step 3 on the next candidate working path.
  b. Assign a weight to each link according to Equation (51).
  c. Find *k-shortest* paths on the new weighted graph as the candidate protection paths of this connection, and for each candidate protection path do the following:
    i. Apply the greedy wavelength and OEO assignment algorithm on this path.
    ii. If succeeds, record the objective value for this pair of working and working paths.
4 If no working and protection paths are successfully provisioned in Step 3, restore the network resources and return *failure*.
5 Otherwise, select the pair of working and protection paths that result in a solution with the least objective value. Restore the network resources and return *success*.

Fig. 5. Reconfiguration evaluation procedure.

next subsection, we describe a TSH to facilitate a global search procedure, which can go beyond the local optima and may lead to a more promising solution space.

C. Tabu-Search Heuristic

Tabu search is a meta-heuristic for solving hard combinatorial optimization problems [21]. Given a problem with a minimization objective function, the tabu search will look for optimal or close-to-optimal solution i in the solution space S. S represents the set of all the possible solutions. A search operation from one solution to another is called a move. The tabu search is carried out through a number of such moves. If a move results in a better solution than the current best solution, it is called an improving move. Otherwise, it is a nonimproving move. In each move, a best solution j in the neighborhood $N(i)$ of the current solution i is found, where $N(i)$ is the neighborhood of the current solution i. Then, j will be the solution from which the next iteration starts. This procedure is executed iteratively until a stop condition is met.

In our TSH approach, the initial solution i is found by the procedure described in Section IV-A. We define a move to be the reconfiguration of one connection. The reconfiguration evaluation procedure presented in Fig. 5 is used to compute a move for one connection and to obtain the objective value of the solution after this move. A move whose reconfiguration results in a solution with the least objective value is called the best move and is chosen to be reconfigured. After a move is executed, this connection is inserted into the tabu list. A connection in the tabu list is not qualified for reconfiguration unless it can result in the aspiration condition, i.e., producing an objective value better than the current best one.

TSH explores the global solution space beyond the local optima through efficient diversification. Diversification refers to methods that lead the tabu search into a new region of solution space. To facilitate diversification, we use a move-frequency-based objective penalty function to redefine the objective value for the solution after a move:

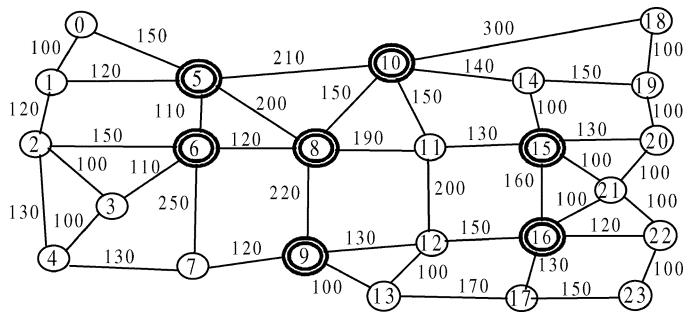

Fig. 6. NET-B: A 24-node 43-link large-sized network.

$$f(x) = \begin{cases} v(x), & \text{if } v(x) < v(i) \\ v(x) + a \cdot \text{freq}(n), & \text{if } v(x) \geq v(i) \end{cases} \tag{26}$$

where x is the solution after the execution of this move, $f(x)$ is the penalized objective value of x, n represents that the move happens on the nth connection, $v(x)$ denotes the original objective value of the solution x (see Section III-B-2), i denotes the initial solution of the current iteration, a is the penalty coefficient which is a predefined constant, and $\text{freq}(i)$ is the frequency of reconfiguration/move on the nth connection. The best move for the current solution is the move that results in the smallest penalized objective value. By imposing a frequency penalty on the move that does not improve the objective value of the current solution, TSH is more likely to use the move that has been used less frequently and to jump into a new search region.

We further employ a technique, called adaptive move pace, to improve the efficiency of TSH. In our heuristic, the move pace is measured by k, the number of k-shortest paths used in the reconfiguration evaluation procedure, whose value has a dominant impact on the one-iteration running time. The smaller the k, the shorter the running time. However, when solving large-scaled problems, using too small a k limits the search space. Therefore, we dynamically change k in a range for the reconfiguration evaluation procedure. The value of k is incremented by one when nonimproving moves occur. When an improving move is executed, k is divided by two. We limit the value of k in a range so that it will not become too small or too large.

V. Numerical Results

In this section, we present numerical results for our solution approaches through experiments. We experimented on two example networks, NET-A and NET-B, to test the performance of the ILP approach, the LOH approach, and the TSH approach. NET-A is a small-sized network with six nodes and nine bidirectional links. NET-B has 24 nodes and 43 bidirectional links, whose topology is shown in Fig. 6. NET-B was also referred to as USANET in [16]. The double-circled nodes in both figures are O/E/O conversion capable nodes. The number of O/E/O modules at such a node is equal to the number of wavelengths on a link. A link length in kilometers is labeled on each link. We assume that EDFAs are placed every 50 km along a fiber link. The system parameters are set as follows:

- data rate on each wavelength channel (B): 10 Gb/s;
- fiber dispersion parameter (D_{PMD}): 0.4 ps/$\sqrt{\text{km}}$;

TABLE I
RUNNING TIMES FOR SOLVING THE ILP PROBLEMS IN NET-A

Case #	Wavelengths	Requests	Running time
1	2	3	509
2	2	4	2622
3	3	4	3287
4	3	5	4826
5	4	5	7200*
6	4	6	?

- wavelength (λ): 1550 nm (see Section II-B);
- spontaneous emission factor $(n_{\rm sp})$: 1.5;
- EDFA saturated gain (G): 21 dB;
- optical bandwidth of the receiver (B_O): 50 GHz;
- signal power on each wavelength channel: 1 mW;
- ASE noise power upper bound: 3 μW (corresponding to a 25-dB OSNR, 1 μW $= 10^{-6}$ W);
- squared PMD value upper bound: 100 ps^2 (corresponding to $\alpha = 0.1$ and $B = 10$ Gb/s, 1 ps$^2 = 10^{-24}$ s^2).

For simplification, these parameters are assumed to be the same on all links. Thus, the squared PMD value and ASE noise power associated with each link can be determined. In Sections V-A, V-B, and V-C, we change the number of wavelengths on each link as well as the size of the connection request set in both NET-A and NET-B to test the network performance under different network settings. Each set of connection requests is randomly generated and uniformly distributed among all node pairs. In Section V-D, we change the squared PMD value and ASE noise power on each link by changing some system parameters to examine the effect of the signal quality constraints on solution results.

A. ILP Solutions for a Small Network

We used CPLEX to solve the ILP formulation on a SUN Ultra-60 workstation with a 450-MHz UltraSparc II processor. As mentioned previously, the ILP problem for the six-node, nine-link, two-wavelength network (NET-A) under four connection requests has 19 582 variables and 23 872 constraints. Solving the ILP problems becomes prohibitively time consuming when we increase the problem size. For all experiments, we limited the running time to 7200 s or 2 h. Table I shows the running times for solving the ILP problems in NET-A. Six different network settings were examined. The first column represents the case number. The second column represents the number of wavelengths on each link. The third column represents the number of connection requests. The last column represents the running time in seconds. The running time for solving the ILP problem is marked with an asterisk if the solution is not optimal. The question mark in the running time column means that no feasible solution is found in 2 h. The running time of ILP varies in a time range from 500 to about 5000 s when the network has two or three wavelengths. However, when the number of wavelengths increases to four, the running time limit for ILP becomes unacceptable for some cases. For example, it does not produce an optimal solution for case 5 and even has no feasible integer solution for case 6 in 7200 s (a feasible integer solution for case 6 does exist). Both the LOH and TSH heuristics found the optimal solutions for all the six cases in 60 s.

TABLE II
NUMBER OF O/E/O MODULES AND WAVELENGTH LINKS OBTAINED BY LOH AND TSH IN NET-B

Case #	#W	#R	#OEO		#WL	
			LOH	TSH	LOH	TSH
1	8	40	17	17	267	255
2	8	50	21	19	312	302
3	8	60	19	18	300	301
4	16	50	20	20	306	297
5	16	70	22	22	393	378
6	16	90	22	18	481	470
7	32	110	37	37	645	591
8	32	140	58	50	840	796
9	32	170	60	55	983	915

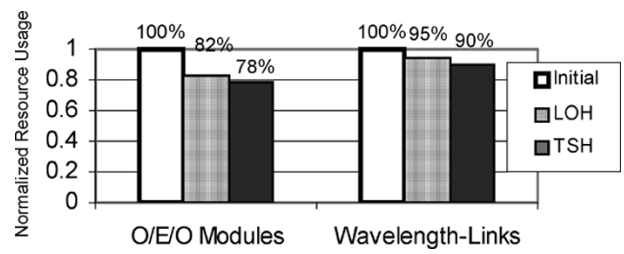

Fig. 7. Normalized results of LOH and TSH in NET-B.

B. Solutions of LOH Versus. TSH for a Large Network

The ILP approach is not capable of handling large-sized networks. In this subsection, we test the local optimization and TSH approaches in NET-B, with 8, 16 and 32 wavelengths and up to 170 connection requests. These network settings are close to real-world networks. The number of k-shortest paths (k) is set to 30 for finding initial solutions and for LOH and is dynamically changed in the range [4], [15] for TSH. The penalty coefficient α in TSH (see (26)) is set to a value in the range [500, 1000] for different cases. The initial value of the tabu tenure t is set to be one tenth of the total number of connection requests. We set a 5400-s or 1.5-h upper limit on the running time of both heuristics.

Table II shows the results of LOH and TSH under nine representative network settings. The #W and #R columns are the number of wavelengths on each link and the number of connection requests. #O/E/O and #WL denote the number of used O/E/O modules and wavelength links, respectively. In all these cases, the solutions obtained by TSH are better than those obtained by LOH. Fig. 7 shows the average results that are normalized to the initial solutions for all cases. Both LOH and TSH show significant improvement over the initial solutions, and TSH has 4% and 5% improvement over LOH in terms of the number of used O/E/O modules and wavelength links, respectively.

Fig. 8 plots the solution traces of the objective value versus the running time for LOH and TSH. The solution traces are obtained from our experiment case 6 in Table II and provide the information about how the heuristics improve the initial solution. Both heuristics stop before the 5400-s time limit. We can observe that TSH generates improvement more quickly than LOH

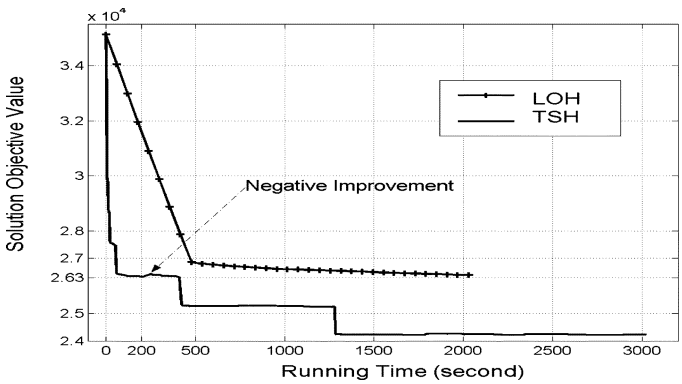

Fig. 8. Solution traces of LOH and TSH.

TABLE III
NETWORK RESOURCE SHARING RATES UNDER LOH AND TSH

Case #	#W	#R	OEO		WL	
			LOH	TSH	LOH	TSH
1	8	40	62.2%	63.8%	26.6%	30.9%
2	8	50	67.7%	62.7%	33.3%	31.5%
3	8	60	69.4%	60.9%	37.5%	34.7%
4	16	50	61.5%	61.5%	32.2%	31.4%
5	16	70	68.6%	70.3%	31.7%	34.6%
6	16	90	73.2%	77.2%	32.0%	34.0%
7	32	110	63.0%	64.1%	28.3%	33.9%
8	32	140	62.3%	67.7%	30.9%	34.3%
9	32	170	64.3%	68.9%	30.8%	35.6%

and yields a better solution within the same amount of time. It takes LOH 2000 s to reach the objective value that TSH obtained in 200 s. This is because the dynamic-move-pace technique used by TSH needs a smaller k than LOH for the k-shortest path computation, resulting in a shorter running time of each iteration. Another observation is that TSH allows for zero and negative improvement in some iterations, leading to some search regions that may not be reached by LOH, while LOH only allows for positive improvement and stops at a zero improvement. These observations explain why TSH outperforms LOH. The solution traces for all other experiment cases in Table II have similar trace patterns.

C. Resource Sharing Rates

In this subsection, we measure the resource-sharing rates, i.e., the savings in network resources resulting from our resource sharing scheme. We define the sharing rates for O/E/O modules (O/E/O) and wavelength links (WL) in (27) and (28), shown at the bottom of the page.

The dividend in the second term in (27) and (28) is the number of network resources actually used, i.e., the number of used O/E/O modules or wavelength links. The divisor is the total number of network resources if no resource sharing is exploited, i.e., the O/E/O modules and wavelength links are repeatedly counted if they are shared by more than one path. The higher the sharing rate, the more O/E/O modules or wavelength links are saved.

Table III shows the sharing rates for O/E/O modules and wavelength links in percentage for the nine experiment cases in Table II. Both the LOH and TSH approaches have high sharing rates. In some cases, more than 70% of the O/E/O modules are saved. On average, the sharing rates for O/E/O modules and wavelengths links are over 60% and 30%, respectively. In most cases, TSH yields better results than LOH. The results also indicate that the saving on O/E/O modules is more than the saving on wavelength links. This is because we have made minimizing the number of O/E/O modules used our first priority. Another observation is that when the network with the same number of wavelengths has more connections, the sharing rates tend to increase. This suggests that network resources have a better chance to be shared under more connection requests, and our approaches can properly handle the scaled-up problems by facilitating more sharing.

D. Effect of Linear Signal Quality Constraints

The squared PMD value and the ASE noise power associated with each link do not depend on the link length alone. These values are usually technology specific and/or vendor specific and can be adjusted through optical engineering in specific systems. In this subsection, we present experimental results to show how varying system parameters affect the solutions and how our solution approaches handle such variation.

Fig. 9 shows the network resource usage of the solution for case 9 in Table II using the TSH approach. In five experiments (the results of each are represented by a set with two bars in Fig. 9), we use different fiber dispersion factor (D_{pmd}), EDFA saturated gain (G), or receiver optical bandwidth (BO). All other system parameters remain unchanged. The middle set represents the results for the experiment using system parameters that are not changed for all these three parameters. Note that the parameter marked with an asterisk is unchanged from its original value. For the first two sets, a larger D_{pmd} or a larger G imposes more stringent constraints on PMD or ASE noise. As a result, a greater number of O/E/O modules is used. For the last two sets,

$$\text{O/E/O}: 1 - \frac{\sum\limits_{\forall j \in V} \sum\limits_{1 \le k \le R_j} \gamma_{j,k}}{\sum\limits_{\forall s,d \in V} \sum\limits_{1 \le x \le X} \sum\limits_{\forall j \in V} \sum\limits_{1 \le k \le R_j} \left(\alpha_{j,k}^{s,d,x} + \sum\limits_{(p,q) \in E} \beta_{p,q,j,k}^{s,d,x} \right)} \tag{27}$$

$$\text{WL}: 1 - \frac{\sum\limits_{1 \le w \le W} \sum\limits_{\forall (i,j) \in E} \left(\sum\limits_{\forall s,d \in V} \sum\limits_{1 \le x \le X} F_{i,j,w}^{s,d,x} + m_{i,j}^{w} \right)}{\sum\limits_{\forall s,d \in V} \sum\limits_{1 \le x \le X} \sum\limits_{1 \le w \le W} \sum\limits_{\forall (i,j) \in E} \left(F_{i,j,w}^{s,d,x} + \sum\limits_{\forall (s,q) \in E} \delta_{i,j,s,q,w}^{s,d,x} \right)} \tag{28}$$

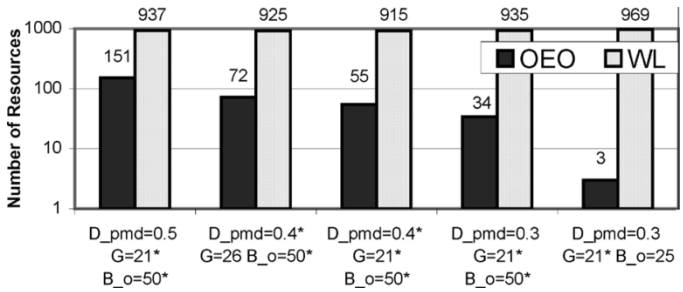

Fig. 9. Effect of changing system parameters in PMD and ASE constraints.

a smaller D_{pmd} and/or a smaller B_o loosens the constraints on PMD and/or ASE noise, resulting in a smaller number of used O/E/O modules. The number of used wavelength links remains at the same level for all the cases. These results indicate that the TSH approach can adapt the resource allocation to the changes in the signal quality constraints, while using network resources efficiently. We have also experimented with the LOH approach and with other network settings and obtained similar results.

VI. Conclusion

This paper addressed the problem of survivable lightpath provisioning in wavelength-division-multiplexed (WDM) mesh networks with shared path protection and sparse optical–electrical–optical (O/E/O) regeneration. This problem was formulated into a static lightpath establishment (SLE) problem under the signal quality constraints, the wavelength continuity constraints, and the path diversity constraints. Jointly considering these constraints promises better efficiency for practical network operations. To further improve the efficiency, a resource-sharing scheme was proposed that supports three kinds of resource-sharing scenarios in WDM mesh networks. In particular, two new resource-sharing scenarios were addressed that allow for sharing O/E/O modules between the working and protection lightpaths of the same connection and between different protection lightpaths.

A combined integer linear programming (ILP) formulation was presented for the survivable lightpath provisioning problem. For the first time, the authors formulated the signal quality constraints on individual regeneration segments between consecutive O/E/O sites along each lightpath and integrated them with the path diversity constraints. Also formulated were the constraints that allow for both kinds of O/E/O sharing scenarios. Although the ILP approach could not solve the problem in large-sized networks, it still has some merits. The proposed ILP formulation can serve as the basis for the solution approaches that start from relaxing the ILP formulation or separating the combined ILP problem into sub-ILP-problems following some divide-and-conquer principles.

Two heuristic approaches were proposed, using the local optimization and tabu-search methods, respectively, to cope with the computation complexity in real-world large networks. The experimental results show that the tabu-search heuristic (TSH) outperforms the local optimization heuristic. Both heuristic approaches can handle large-scaled problems with a modest time complexity. In most of the experiment cases, the sharing rates for O/E/O modules are satisfactorily high (over 60%), as are the sharing rates for wavelength links (over 30%). These high sharing rates translate into great improvement in network resource utilization or great savings in network costs.

Although priority was given to minimizing the number of used O/E/O modules, the authors' approaches can be easily adjusted to those objectives that take a tradeoff between minimizing the number of O/E/O modules and minimizing the number of wavelength links. Other linear signal quality constraints can also be easily incorporated into the proposed formulation and heuristics. The authors assumed uniform system parameters in the experiments, but their approaches did not exclude the nonuniform situations in real-world networks. In this paper, only protection against link failures was considered. The more generic shared risk link group (SRLG)-diverse protection can also be incorporated into the problem and can be handled by enhancing these solution approaches.

References

[1] R. Sabella, E. Iannone, M. Listanti, M. Berdusco, and S. Binetti, "Impact of transmission performance on path routing in all-optical transport networks," *J. Lightw. Technol.*, vol. 16, no. 11, pp. 1965–1972, Nov. 1998.

[2] B. Ramamurthy, H. Feng, D. Datta, J. P. Heritage, and B. Mukherjee, "Transparent vs. opaque vs. translucent wavelength-routed optical networks," presented at the OSA Optical Fiber Communications Conf. (OFC 1999), San Diego, CA, Feb. 1999.

[3] B. Ramamurthy, S. Yaragorla, and X. Yang, "Translucent optical WDM networks for the next-generation backbone networks," presented at the IEEE GLOBECOM 2001, San Antonio, TX, Nov. 2001.

[4] S. Ramamurthy and B. Mukherjee, "Survivable WDM mesh networks, Part I—Protection," in *Proc. IEEE INFOCOM 1999*, Mar. 1999, pp. 744–751.

[5] G. Li, J. Yates, R. Doverspike, and D. Wang, "Experiments in fast restoration using GMPLS in optical/electronic mesh networks," in *Postdeadline Papers Dig., OSA Optical Fiber Communications Conf. (OFC 2001)*, Anaheim, CA, Mar. 2001, pp. PD34.1–PD34.3.

[6] B. Doshi *et al.*, "Optical network design and restoration," *Bell Labs Tech. J.*, vol. 4, no. 1, pp. 58–84, 1999.

[7] I. Chlamtac, A. Ganz, and G. Karmi, "Purely optical networks for terabit communication," in *IEEE INFOCOM 1989*, Apr. 1989, pp. 887–896.

[8] H. Zang, J. P. Jue, and B. Mukherjee, "A review of routing and wavelength assignment approaches for wavelength-routed optical WDM networks," *SPIE/Baltzer Optical Netw. Mag.*, vol. 1, no. 1, pp. 47–60, Jan. 2000.

[9] R. Ramaswami and K. N. Sivarajan, "Routing and wavelength assignment in all-optical networks," *IEEE/ACM Trans. Netw.*, vol. 3, no. 5, pp. 489–500, Oct. 1995.

[10] D. Banerjee and B. Mukherjee, "Wavelength-routed optical networks: Linear formulation, resource budgeting tradeoffs, and a reconfiguration study," *IEEE/ACM Trans. Netw.*, vol. 8, no. 5, pp. 598–607, Oct. 2000.

[11] M. Sridharan, A. Somani, and M. Salapaka, "Approaches for capacity and revenue optimization in survivable WDM networks," *J. High Speed Netw. (Special Issue on Survivable Optical Networks)* , vol. 10, no. 2, pp. 109–125, Aug. 2001.

[12] E. Modiano and A. Narula-Tam, "Survivable lightpath routing: A new approach to the design of WDM-based networks," *IEEE J. Sel. Areas Commun.*, vol. 20, no. 4, pp. 800–809, May 2002.

[13] H. Zang and B. Mukherjee, "Path-protection routing and wavelength-assignment (RWA) in WDM mesh networks under duct-layer constraints," *IEEE/ACM Trans. Netw.*, vol. 11, no. 2, pp. 248–258, Apr. 2003.

[14] L. Shen, X. Yang, and B. Ramamurthy, "Shared risk link group (SRLG)-diverse path provisioning under hybrid service level agreements in wavelength-routed optical mesh networks: Formulation and solution approaches," presented at the OptiComm, Dallas, TX, Oct. 2003.

[15] H. Zang, R. Huang, and J. Pan, "Methodologies on designing a hybrid shared-mesh-protected WDM network with sparse wavelength conversion and regeneration," in *Proc. SPIE*, vol. 4910, Sep. 2000, pp. 188–196.

[16] G. Shen, W. D. Grover, T. H. Cheng, and S. K. Bose, "Sparse placement of electronic switching nodes for low-blocking in translucent optical networks," *OSA J. Optical Netw.*, vol. 1, no. 12, pp. 424–441, Dec. 2002.

[17] (2003, May) "Impairments and other constraints on optical layer routing," IETF Draft (Work in Progress). [Online]. Available: draft-ietf-ipo-impairments-05.txt

[18] J. Strand, A. L. Chiu, and R. Tkach, "Issues for routing in the optical layer," *IEEE Commun. Mag.*, vol. 39, no. 2, pp. 81–87, Feb. 2001.

[19] B. Ramamurthy, D. Datta, H. Feng, J. P. Heritage, and B. Mukherjee, "Impact of transmission impairments on the teletraffic performance of wavelength-routed optical networks," *J. Lightw. Technol.*, vol. 17, no. 10, pp. 1713–1723, Oct. 1999.

[20] J. Yen, "Finding the K shortest loopless paths in a network," *Manage. Sci.*, vol. 17, pp. 712–716, 1977.

[21] F. Glover and M. Laguna, *Tabu Search*. Norwell, MA: Kluwer, Jul. 1997.

[22] X. Yang, L. Shen, and B. Ramamurthy, "Maximizing resource sharing in WDM mesh networks with path-based protection and sparse O/E/O regeneration," in *Proc. OSA Optical Fiber Communications Conf. (OFC 2004)*, Los Angeles, CA, Feb. 2004, pp. Th04.1–Th04.3.

Xi Yang (S'01–M'05) received the B.S. degree in communication engineering and the M.S. degree in communication and information system from the University of Electronic Science and Technology, Chengdu, China, in 1997 and 2000, respectively, and the Ph.D. degree in computer science from the University of Nebraska–Lincoln in 2004.

He worked with Lucent Technologies for one year as a Member of Technical Staff in Bell Laboratories, Beijing, China. He is currently a Research Associate with Information Science Institute of the University of Southern California (USC/ISI), Los Angeles. His research interests include the design of wavelength-division-mutliplexing (WDM) optical networks, wavelength routing and switching, optical network survivability, and generic network design, control, and management.

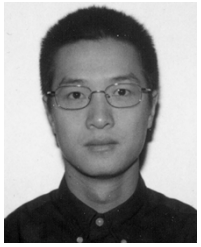

Lu Shen (S'01) is currently working toward the Ph.D. degree in the Department of Computer Science and Engineering at the University of Nebraska–Lincoln.

Before he joined University of Nebraska–Lincoln, he was a Software Engineer with Nortel Networks and Motorola Software Center. His research interests include control and management in wavelength-division-multiplexing (WDM) optical networks, Internet protocol over WDM, multiprotocol label switching/MPLS/GMPLS protocol design, and survivable network design.

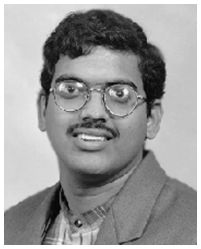

Byrav Ramamurthy (M'98) received the B.Tech. degree in computer science and engineering from the Indian Institute of Technology, Madras, India, in 1993 and the M.S. and Ph.D. degrees in computer science from the University of California, Davis (UC Davis), in 1995 and 1998, respectively.

Since August 1998, he has been an Assistant Professor in the Department of Computer Science and Engineering at the University of Nebraska–Lincoln (UNL). He is the founding co-director of the Advanced Networking and Distributed Experimental Systems (ANDES) Laboratory at UNL. He is the Feature Editor on Theses for the *Optical Network Magazine* and served as a Co-Guest Editor for *IEEE Network* magazine's Special Issue on Optical Communication Networks. He is author of the textbook *Design of Optical WDM Networks—LAN, MAN and WAN Architectures* (Norwell, MA: Kluwer, 2000). His research areas include optical networks, distributed systems, and telecommunications.

Prof. Ramamurthy was a recipient of the Indian National Talent Search scholarship and was a Fellow of the Professors for the Future Program at UC Davis. He is a recipient of the UNL Research Council Grant-in-Aid Award for 1999 and the College of Engineering and Technology Faculty Research Award for 2000. He has served as a Member of the technical program committees for the IEEE INFOCOM, IEEE GLOBECOM, Opticomm, the IEEE International Conference on Communications (ICC), and the IEEE International Conference on Computer Communications and Networks (ICCCN). He serves as the Secretary of the IEEE Communications Society (ComSoc) Optical Networking Technical Committee (ONTC).