University of Nebraska - Lincoln
DigitalCommons@University of Nebraska - Lincoln

Biological Systems Engineering: Papers and Publications

Biological Systems Engineering

1-1-1998

OPTO-ELECTRONIC SENSOR SYSTEM FOR RAPID EVALUATION OF PLANTER SEED SPACING UNIFORMITY

Michael F. Kocher
University of Nebraska - Lincoln, mkocher1@unl.edu

Yubin Lan
University of Nebraska - Lincoln

Changhe Chen
University of Nebraska - Lincoln

John A. Smith
University of Nebraska, Panhandle Research & Extension Center, Scottsbluff, jsmith5@unl.edu

Follow this and additional works at: http://digitalcommons.unl.edu/biosysengfacpub

Part of the Biological Engineering Commons

Kocher, Michael F.; Lan, Yubin; Chen, Changhe; and Smith, John A., "OPTO-ELECTRONIC SENSOR SYSTEM FOR RAPID EVALUATION OF PLANTER SEED SPACING UNIFORMITY" (1998). *Biological Systems Engineering: Papers and Publications.* Paper 150.
http://digitalcommons.unl.edu/biosysengfacpub/150

This Article is brought to you for free and open access by the Biological Systems Engineering at DigitalCommons@University of Nebraska - Lincoln. It has been accepted for inclusion in Biological Systems Engineering: Papers and Publications by an authorized administrator of DigitalCommons@University of Nebraska - Lincoln.

OPTO-ELECTRONIC SENSOR SYSTEM FOR RAPID EVALUATION OF PLANTER SEED SPACING UNIFORMITY

M. F. Kocher, Y. Lan, C. Chen, J. A. Smith

ABSTRACT. *An opto-electronic seed spacing evaluation system that measured time intervals between seeds and detected front-to-back location of seed drop events relative to the planter was used to rapidly determine planter seed spacing uniformity in the laboratory. The seed detection sensor for the opto-electronic system consisted of a rectangular photogate with 24 photo-transistors receiving light beams from 24 LEDs opposite to them. The system also included circuitry to interface the photogate with a digital I/O board in a personal computer. The opto-electronic system was tested with three planter configurations. During the tests, the photogate was positioned beneath the seed drop tube in a position representing the bottom of the furrow, and directly above the belt of a grease belt test stand. Seed spacings obtained with the opto-electronic system were compared with measurements of the same seed spacings obtained from the grease belt test stand. The information on the front-to-back location of seed drop events relative to the planter significantly improved the electronic seed spacing measurements in all cases. Seed spacing measurements obtained using the opto-electronic system determining time intervals between seeds and front-to-back locations of seed drop events relative to the planter were strongly correlated (average r = 0.951) with the same seed spacing measurements obtained using the grease belt test stand. The opto-electronic system can be used instead of a grease belt test stand to rapidly obtain quantitative evaluations of planter seed spacing uniformity in the laboratory.* ***Keywords.*** *Instrumentation, Spacing, Planters, Grease belt, Sugarbeets.*

Traditional methods of sugarbeet planting have involved planting excess seed and thinning the resulting plants to obtain uniform plant spacing. Until the 1970s nearly all the sugarbeet crop in the world, including the United States, was planted with excess seed and the resulting plants thinned to a final stand. Advancements in plant establishment practices such as seed bed preparation, high quality seed, and precision planters, have provided higher and more consistent seedling emergence (about 80%). As a result, sugarbeets have been planted to stand in Western European countries such as England since the mid-1980s and thinning has been eliminated (Jaggard, 1990; Prince and Durrant, 1990). Precision planters were developed in Europe to facilitate uniform spacing between plants within the row. Planter comparison studies in England (Thomson, 1986) have shown these precision planters have been providing accurate plant spacing for European sugarbeet producers.

Article has been reviewed and approved for publication by the Information & Electrical Technologies Div. of ASAE.

Approved for publication as Journal Series No. 11633 of the University of Nebraska Agricultural Research Division. Reference to commercial products or trade names is for specific information only, no endorsement is implied and no discrimination against other products or trade names is intended.

The authors are **Michael F. Kocher,** ***ASAE Member Engineer,*** Associate Professor, **Yubin Lan,** ***ASAE Member,*** Research Engineer, **Changhe Chen,** Former Research Engineer, Department of Biological Systems Engineering, University of Nebraska, Lincoln, Nebr.; and **John A. Smith,** ***ASAE Member Engineer,*** Associate Professor, University of Nebraska, Panhandle Research & Extension Center, Scottsbluff, Nebr. **Corresponding author:** Michael F. Kocher, Department of Biological Systems Engineering, University of Nebraska, Lincoln, NE 68583-0726; tel: (402) 472-3949; e-mail: mkocher@unl.edu.

Seed spacing is important particularly to specialty crops like sugarbeets where seed spacing uniformity has been demonstrated to be a significant factor in yield. With uniform spacing the sugarbeet roots can grow to maximum size and fill the row space, without being pushed out of the row. Uniform spacings also result in uniform sized roots which in turn reduces harvest loss.

One of the most important criteria in evaluating sugarbeet planter performance is seed spacing uniformity. Research has resulted in a wide variety of measures to quantify planter performance with regard to plant spacing (Brooks and Church, 1987; Hofman, 1988; Hollewell, 1982; Jasa and Dickey, 1982; McLean, 1974; Thomson, 1986). Tests have been conducted with measurements of distances between plants in the field or distances between seeds on a grease belt test stand (Smith et al., 1991; Kachman and Smith, 1995). The distance between plants within a row is influenced by a number of factors including variability in planter metering and seed dropping, failure of a seed to be dropped, multiple seeds dropped at the same time, seed trajectory, and seed bounce in the furrow, as well as seed emergence factors. The distance between seeds in grease belt tests is influenced by all the planter metering and dropping factors listed above except seed bounce is minimized by grease on the belt, and seed emergence is not included. Limitations on the grease belt system include the length of the belt which limits the consecutive seed spacing data that can be obtained, the time required to manually measure the seed spacings and enter the data into a computer, and the concern that seeds may still slide or bounce on the grease belt, particularly at high belt speeds.

Seed spacing could also be measured by digging up the seeds after they have been planted. However, once planted, it is difficult to dig up and locate small seeds such as sugarbeet, without disturbing their location. That data

 © 1998 American Society of Agricultural Engineers 0001-2351 / 98 / 4101-237

would indicate the effects of the same factors as would be in the grease belt seed spacing data, along with the effects of seed bounce in the furrow.

Field measurement of plant spacings can be used to give information on planter seed spacing capability, but that data would include the same factors as for the grease belt seed spacing data along with effects from seed bounce in the furrow, and seeds that do not germinate or emerge. Again, typically, plant spacings must be measured manually and entered into a computer for analysis.

Electronic sensors such as those manufactured by DICKEY-john Corporation have been developed to detect seeds as they drop through planter seed drop tubes. These sensors commonly employ light sources and light detectors. Seeds passing between the light sources and light detectors block sufficient light to change the light detector output enough that electronic circuits can recognize the seed passage. These commonly available seed detection sensors are used extensively with planter monitors to indicate planter operation while planting. These sensors detect when a seed passes, but not where it passes. As a result no information on the front-to-back location of the seed passage relative to the planter is obtained. These sensors are used with computers obtaining the time interval between seed drops. The time interval multiplied by the planter travel speed gives an estimate of the seed spacing, but this estimate does not include information regarding the front-to-back location of seed drop events.

A planter monitor (DjPM3000) developed by DICKEY-john Corporation uses a flashing LCD display to monitor seed flow through the seed sensor in each planter seed tube. Any time seed is not going through the sensor into the ground, the monitor sounds an alarm and indicates which planter unit has stopped planting. The monitor can also indicate planting population and average seed spacing, but does not give individual seed spacing data or information on seed spacing uniformity.

A planter monitor developed by Big John Manufacturing uses currently available planter seed detection sensors to obtain estimates of individual seed spacing. The seed spacing uniformity is not analyzed, but individual seed spacing estimates can be displayed graphically on an LCD screen.

A Corn Planter Unit Test Stand for optimizing meter performance was developed by S. I. Distributing Company. A computer system with a planter seed sensor counts seeds and seed drop opportunities. This unit calculates and displays the percentage of seeds dropped (vs opportunities). A belt under the seed tube is used to allow the operator to look for misses, multiples, etc., and record those by hand.

A system developed by Meuleman Automation in the Netherlands uses a computer with a photogate similar to currently available planter seed detection sensors to measure the time interval between seed drop events, and with ground speed information, relate that to seed spacing. Analyses of seed spacing uniformity are presented graphically and numerically. This system does not have the capability to determine the front-to-back location of seed drop events relative to the planter. This system has the advantage of not requiring manual measurement of seed spacing as required with a grease belt system, and does not have the limitation of belt length corresponding to number of consecutive seed spacing data points that can be obtained.

In summary, seed spacing information can be obtained manually by digging up seeds after they have been planted, measuring plant spacing after emergence, or with a grease belt system. Each system has advantages and disadvantages, but all share the disadvantage of the time and tedium involved in obtaining the seed spacing data. Electronic means have been developed to detect seeds passing through sensors, and have been used to obtain seed spacing data rapidly. These sensors and systems have not utilized front-to-back location of seed drop events relative to the planter. This information can be a significant component of seed spacing as planters can drop seed in a 3 cm or wider range of front-to-back locations relative to the planter.

Seed Spacing Example with Front-to-Back Location

The advantage of measuring the front-to-back location where a seed drops through an electronic sensor is best explained using a theoretical example with seeds starting at the release point from the planter and moving in projectile motion (ignoring air resistance) down to the bottom of the furrow. Consider the case of a Kleine Unicorn 3 planter being tested using an electronic sensor system. This planter has a seed metering and release system with no seed drop tube, such that the metering and release mechanism imparts a relative velocity to each seed equal to the planter travel speed, but in the rearward direction (fig. 1). For the purposes of this example, at the release point, the seed is 4 cm above the bottom of the furrow, and the planter travel speed is 4.8 km/h (1.333 m/s).

The first seed is discharged by the discharge device so that it is given a velocity equal in magnitude to the planter travel speed, but 5° below the horizontal instead of directly horizontal (fig. 1a). This seed begins its fall from the planter with velocity components relative to the planter (and electronic sensor) of –1.328 m/s horizontally (rearward), and – 0.1162 m/s vertically (downward). As a result, the horizontal velocity of the seed relative to the ground (fig. 1b) is the sum of the planter travel speed

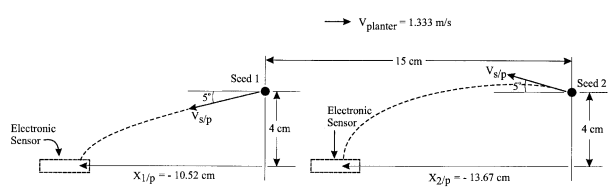

(a) With respect to planter

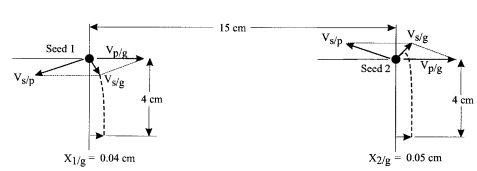

(b) With respect to ground

Figure 1–Diagram of example projectile motion of two consecutive seeds from a Kleine Unicorn 3 planter showing the physical components involved in using front-to-back location of seed drops relative to the planter in measuring seed spacing.

(1.333 m/s) and the horizontal component of the seed discharge speed relative to the planter (–1.328 m/s), resulting in a net horizontal speed of 0.00507 m/s (forward). Since the seed began this fall with a vertical velocity of – 0.1162 m/s (downward), it falls the vertical distance of 4 cm in 0.0792 s. With its forward velocity relative to the ground acting over this time, the seed reaches the furrow 0.040 cm forward of the point on the ground over which it was released. From a reference frame attached to the planter (e.g., the electronic sensor) (fig. 1a), however, this seed has a horizontal velocity of –1.328 m/s (rearward), so when it reaches the bottom of the furrow it is 10.52 cm horizontally behind the seed release point on the planter. This 10.52 cm dimension is the front-to-back location for this seed drop relative to the planter.

The planter is set to release seeds every 15 cm of travel, so it will release the next seed 0.1125 s after it released the first seed (fig. 1). For this seed however, the seed discharge device discharges it so it is given a rearward velocity equal in magnitude to the planter travel speed, but 5° above the horizontal (fig. 1a). This seed starts its fall to the furrow with velocity components relative to the planter (and electronic sensor) of –1.328 m/s horizontally (rearward), and 0.1162 m/s vertically (upward). The net horizontal velocity of this seed relative to the ground (fig. 1b) during its fall is 0.00507 m/s (forward). It takes the seed 0.1029 s to fall to the ground so when it reaches the furrow, it is 0.052 cm forward of the point on the ground over which it was released. Relative to the planter (fig. 1a), however, this seed has a horizontal velocity of –1.328 m/s (rearward), so when it reaches the furrow, it is 13.67 cm horizontally behind the seed release point on the planter. This 13.67 cm dimension is the front-to-back location for this seed drop relative to the planter.

The true spacing can be calculated from the seed locations relative to the ground. This result is the between-seed travel distance of 15 cm, plus 0.05 cm (second seed falls forward 0.05 cm relative to the ground during its fall) minus 0.04 cm (first seed falls forward 0.04 cm relative to the ground during its fall). The true spacing is determined to be 15.01 cm.

Electronic sensor systems without the front-to-back seed drop location relative to the planter must rely on the time interval between seed drops to determine spacing. To determine the time interval between the two seeds reaching the furrow, start with the release point of the first seed at time zero. The first seed reaches the furrow at time 0.07923 s. The second seed reaches the furrow at 0.2154 s (0.1125 s for forward travel to the next seed release point plus 0.1029 s for the second seed to reach the furrow). The time interval between the seeds reaching the furrow is 0.1362 s, which, at the planter travel speed, translates into 18.15 cm, resulting in a measurement error of 3.14 cm (18.15 cm – 15.01 cm) for this seed spacing.

An electronic sensor system with front-to-back location relative to the planter would calculate the spacing from the time interval, yielding 18.15 cm, and add the difference in front-to-back location where the seeds dropped through the electronic sensor (10.5 cm – 13.5 cm when a 0.3 cm resolution of the sensor is used) giving a final seed spacing of 15.15 cm. The measurement error for the electronic sensor system in this example is 0.14 cm, less than half a centimeter.

Experience with testing a Kleine Unicorn 3 planter indicates this example is neither exaggerated, nor uncommon. Front-to-back variation in seed drop location was observed visually in order to set the electronic sensor in the correct location so all seeds released from the planter could pass through the sensing opening in the electronic sensor. The example above exhibits a range of front-to-back location of seed drops relative to the planter (and electronic sensor) of about 3 cm (13.67 cm – 10.52 cm). The length of the sensing opening in the electronic sensor in this direction was 7.6 cm, and reasonable care had to be taken to position the sensor so all seeds would pass through the sensing opening. At higher speeds the variation in front-to-back location of the seed drops increased, and at a planter travel speed of 8.05 km/h, it was impossible to position the sensor so all the seeds passed through the sensing opening. Calculations such as in the example above, with higher speeds, confirm that the variation in front-to-back location of the seed drop events increases, as do the magnitude of the errors in seed spacing measurements obtained with sensors which use time intervals alone to determine the seed spacings.

Objectives

The overall objective of this research was to determine if an opto-electronic seed spacing evaluation system could be used instead of a grease belt system to obtain rapid quantitative evaluations of planter seed spacing uniformity in the laboratory. A specific objective was to determine how well measurements obtained using the opto-electronic seed spacing evaluation system, with and without the relative front-to-back seed drop location, agreed with measurements of the same seed spacings obtained using a grease belt system.

Note that the data in this article are referred to as seed spacings, as they were the spacings measured between dropped seeds. These seed spacings, however, were not final seed spacings as seed spacings measured with the opto-electronic system did not include the effects of seed bounce and roll, and seed bounce and roll were virtually prevented on the grease belt. A more explicit description of the seed spacings reported in this article would be spacings between points where seeds first impacted the furrow after being released by the planter.

Materials and Methods

Seed

Pelleted sugarbeet seeds (one seed per pellet) were used for this study. The specification for the diameter of this pelleted seed is between 3.77 to 4.56 mm (9.5/64 to 11.5/64 in.) (U.S. Industry Practice).

Grease Belt System and Planter

A grease belt test stand was used to test the ‘potential’ seed spacing of each planter configuration. The test stand was a model UTR manufactured by Stanhay Corporation of Kent, England, and was originally designed to test seed spacing output of the Stanhay line of precision planters. This particular test stand had a 13 cm wide belt with a 3.36 m long horizontal viewing surface. The unit was equipped with a multi-speed drive arrangement to provide a range of belt surface speeds from 3.2 to 9.7 km/h, relative

to the stationary planter mechanism, and a range of seed spacings on the belt. A support stand was designed to position the planter unit over the belt, with the viewing surface of the belt spaced below the planter in a vertical position to duplicate the relative distance between the bottom of the seed tube and the bottom of the seed furrow. The planter mechanism was driven by the grease belt test stand to provide the correct seed spacing and relative planter-to-grease belt speed. Sufficient oil (80 W gear oil) was added to the top surface of the belt to 'capture' the seed as it was released from the planter without rolling or bouncing of the seed on the belt surface.

The planter used for these tests was a John Deere MaxEmerge II. Seed spacing tests were conducted with two seed tubes in three different planter configurations. One tube consisted of the standard tube assembly ordinarily used in this planter for sugarbeets prior to 1994. This tube assembly consisted of an outer tube (John Deere Part No. BA 25839) and a tube insert (John Deere Part No. AH 131883). The other tube was a custom made, straight metal tube. This metal tube had a top shape similar to the standard John Deere tube but with straight side walls tapering to bottom opening dimensions of 1 cm wide and 0.6 cm front-to-back. This metal tube was normally installed on the planter in a vertical position with a bottom discharge height the same as for the John Deere tube.

In one of the planter configurations, the straight metal tube was used with the stationary planter operating over the moving belt with a surface speed (simulating a planter travel speed) of 3.2 km/h. This configuration was expected to produce very uniform seed spacing with seeds falling straight down.

For another configuration, the John Deere tube assembly was used with the bottom of the tube moved rearward so the tube tilted about 10° rearward of a vertical line. The belt speed was maintained at 3.2 km/h for this configuration. This configuration was expected to produce less uniform seed spacing than the straight metal tube with a belt speed of 3.2 km/h.

The straight metal tube was used in the remaining configuration, but with a belt speed of 8.7 km/h. This configuration was also expected to produce less uniform seed spacing than the straight metal tube with a belt speed of 3.2 km/h.

Opto-electronic System Hardware

The centerpiece of the opto-electronic system hardware was a photogate consisting of 24 pairs of near-infrared (NIR) LEDs (model: EG&G VACTEC GaAs VTE1213) and photo-transistors (model: EG&G VACTEC NPN VTT1214), as shown in figure 2. The LEDs and photo-transistors had a narrow beam angle of ±10° and were formed in a molded T-1 3/4 plastic package. The photogate was a rectangular cast acrylic plastic piece 12.7 cm long, 11.7 cm wide, and 2.5 cm high. An opening 7.6 cm long × 6.6 cm wide was machined in the middle of the block for seed passage. Twenty-four holes with a diameter of 5 mm were machined in two rows on each side of the photogate for the photocells. On one side LEDs were installed in the top row and photo-transistors were installed in the bottom row. On the opposite side photo-transistors were installed in the top row while LEDs were installed in the bottom row. Each photo-transistor was located directly opposite an LED to close a photo-electrical loop (as shown in fig. 3).

When no seeds were passing between an LED and its corresponding photo-transistor, the detector was fully exposed to the NIR energy from the LED. The NIR energy excited the photo-transistor so that maximum current was generated from the collector to the emitter. Consequently, the output voltage from the photo-transistor circuit was at its maximum value. If a seed was passing between the LED and the photo-transistor, the NIR energy was partially blocked such that less current was excited from the collector to the emitter. Therefore the output voltage was lower when a seed passed between the LED and the photo-transistor. Each of the voltage output lines from the 24 photo-transistors was connected to an input line on a digital I/O board (PI-IO48 advanced digital I/O and timer

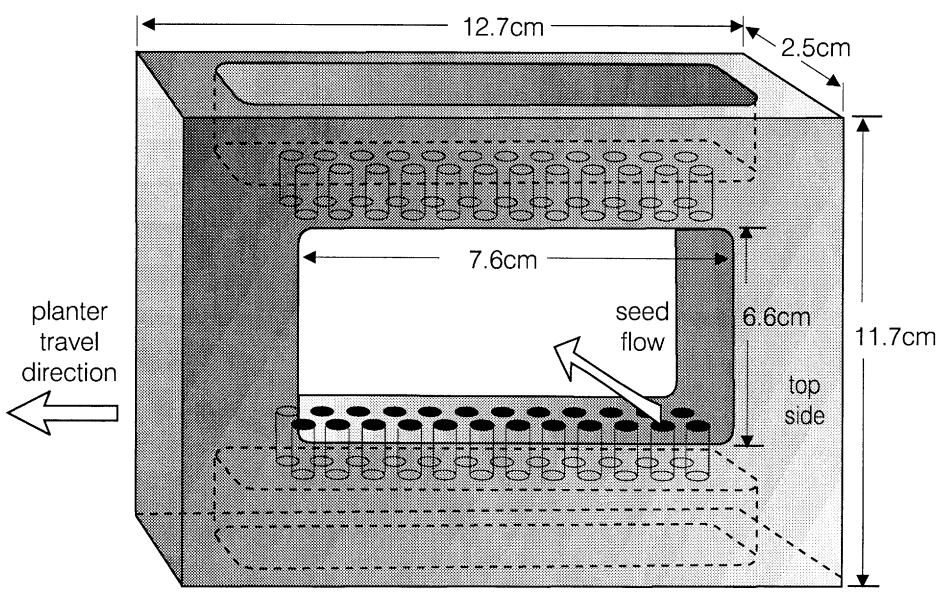

Figure 2–Sketch of the opto-electronic system photogate sensor. Twenty-four holes with 5 mm diameter were in a staggered arrangement on each side of the photogate for the LEDs and photo-transistors.

board from Acqutek Corporation, Inc.), using a total of 24 of the 48 available digital inputs.

The I/O board also had three 16 bit counter/timers and a 3.58 MHz clock. One of the counters was used with a Hall-effect magnetic switch (UGN3120U from Allegro MicroSystems, Inc.) to measure the rotational speed of a rotating component in the planter drive mechanism. The planter travel speed was determined from this rotational speed. The remaining two counters were used to measure the time intervals between seed drop events. One counter counted the pulses of the onboard clock and the other counted each time the clock counter reset. The total number of clock pulses between two seed drop events was calculated from these two counters. The number of pulses divided by the frequency of the on board clock yielded the time interval between two seed drops.

The photogate and photo-electrical loop was studied to investigate independence of each LED-photo-transistor pair. The output voltage from each photo-transistor circuit was measured with a piece of metal covering a neighboring LED on one side of the LED directly across from the photo-transistor. With one neighboring LED completely blocked, the output of each photo-transistor dropped from 1.70 V to an average of 1.14 V (range from 0.94 to 1.38 V). Covering an LED completely blocked all infrared output from that LED, while a seed falling between an LED and the photo-transistor opposite it would not block all the infrared output from that LED.

A regulated DC power supply (MG-PS, 10AD) was used to supply 12 V to the photo-transistor and variable resistor side of the circuit (fig. 3). Another DC power supply (LODESTAR, PS-1610 S) with both current and voltage features was used to supply 1.3 V to the LEDs.

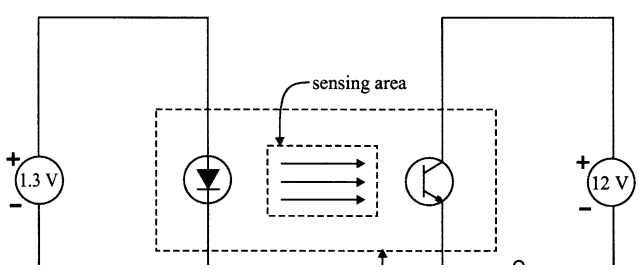

Figure 3–Schematic of the photo-electric circuits for each LED-photo-transistor pair in the opto-electronic system photogate sensor.

Computer Software

The digital I/O board was used in an Intel 8088-based IBM personal computer running at 4.77 MHz. The data acquisition portion of the program was written in assembly language in order to be fast enough to detect every passing seed. The main program was written in Microsoft QuickBASIC. The main program called the assembly subroutine to perform the data acquisition from the sensor and then the main program completed the data processing and displayed the results.

The 24 digital channels were organized into three digital input ports as PA, PB, and PC. The assembly subroutine polled the three ports and compared two consecutive readings from each port. A change in the reading meant a status change for the digital input, which indicated a seed either had entered the field of view of a photo-transistor or had just left the field of view of a photo-transistor. For the former case, a new seed was detected and the readings from all three ports and the three counters were stored in RAM. This cycle repeated until the requested total number of seeds had been detected.

The main program retrieved all the readings from RAM and then processed the data. Readings from digital ports PA, PB, and PC had to be analyzed to assign seed locations to specific photo-transistors in preparation for determining the front-to-back location of each seed as it passed through the sensor. The size of the pelleted sugarbeet seed, and the size and spacing of the photo-transistors indicated that a single sugarbeet seed could not block more than two adjacent photo-transistors at a time. Therefore, two adjacent blocked light beams were counted as one seed, and the seed location was consistently assigned to the photo-transistor closer to the front of the planter. Three adjacent blocked light beams were counted as two seeds, with the seed locations assigned to the photo-transistors on each end of the line formed by the three photo-transistors. The maximum seed spacing error from this technique was equal to the spacing between adjacent photo-transistors. With the staggered arrangement of the photo-transistors, the maximum spacing error was ±0.3 cm.

The seed spacing between two seeds was determined in two ways. The first method used the time interval between the seed drops multiplied by the planter travel speed giving a seed spacing based on the time interval alone. The second method added the front-to-back location where the seed passed through the photogate relative to the planter, to the spacing calculated from the planter travel speed and time interval, giving a seed spacing based on time interval and front-to-back seed drop location. The fast response time of the photo-transistors (rise time less than 30 μs) and scan rate of the system (assembly language program data acquisition rate of about 8 to 13 KHz), coupled with the ±0.3 cm maximum front-to-back seed location error resulted in a total maximum seed spacing error of ±0.34 cm for this method.

A number of measures based on the theoretical spacing for the planter were defined by the International Organization for Standardization in ISO Standard 7256/1-1984 (E) (ISO, 1984). These measures included the quality of feed index, multiples index, miss index, and precision. The theoretical spacing is the spacing that would occur if there were no misses, multiples, or variability, and is based on the manufacturer's specifications (Kachman and Smith, 1995). In this study, target spacing was determined from the planter drive rotational speed and the drive speed ratio, and used as the theoretical spacing. Precision is a measure of the variability in spacing among normally sown seeds (misses and multiples not included). Normally sown seeds as defined in the ISO standard are those having seed spacings within the range from one-half times the theoretical spacing to 1.5 times the theoretical spacing.

Calibration Procedure

A John Deere MaxEmerge II planter was used with regular pelleted sugarbeet seed. The seed plate (No. A43066) had 45 cells and some cells were filled with hot glue to force consistent, easily recognized misses. The pattern was three consecutive seed holes filled followed by ten consecutive seed holes left open, two consecutive seed holes filled followed by 20 consecutive seed holes left open, and one seed hole filled followed by nine consecutive seed holes left open. This arrangement gave a triple miss, a double miss, and a single miss, with known seed drop opportunities between them, that were readily recognized on the grease belt. This technique was used to allow matching each seed spacing measurement from the grease belt with the same seed spacing measurement from the opto-electronic system. The planter metering system was set for a target seed spacing of 10.3 cm and operated with a vacuum of 10 cm of water. The planter was positioned over the grease belt (fig. 4) with the horizontal viewing surface of the belt positioned to duplicate the vertical distance between the bottom of the seed tube and the bottom of the seed furrow in normal planting conditions. The photogate was positioned under the seed tube and just above the grease belt so there was no contact between the photogate and the oil and seeds on the belt. The photogate was attached to the planter stand to minimize relative motion between the planter and the photogate.

The opto-electronic sensor system was prepared for the test by adjusting each variable resistor (R2 in fig. 3) so the output voltage from each photo-transistor circuit was 1.70 V (±0.02 V) with nothing blocking light transmission from the LEDs to the photo-transistors. R2 consisted of a fixed resistor in series with a variable 200 Ω resistor. Values for the fixed resistor varied from one LED- photo-transistor pair to another, ranging from 50 to 500 Ω as needed to make $V_o \approx 1.7$ V with the variable resistor about in the middle of its range. Seeds partially blocking transmission of light to a photo-transistor dropped the output voltage from that photo-transistor below the 1.4 V level where the transition from digital "ON" to "OFF" occurred for the I/O board used. It took about one-half hour for the opto-electronic sensor system to warm up and stabilize, so the voltage output from each photo-transistor was checked after each grease belt data collection run. The variable resistors were adjusted as necessary to bring the output voltages back to 1.70 ± 0.02 V.

Four button magnets were placed on a pulley in the planter driving mechanism. The Hall effect switch was attached to the planter frame so it faced the magnets as they rotated past the Hall effect switch. The planter travel speed was calculated from the rotational speed of the pulley in the planter drive mechanism, and the planter drive mechanism speed ratios.

The planter/grease belt/opto-electronic system combination was run seven or eight times with each planter configuration. The planter and grease belt were started and run for 30 s or so to reach steady operating conditions. The opto-electronic system was initialized to collect data for

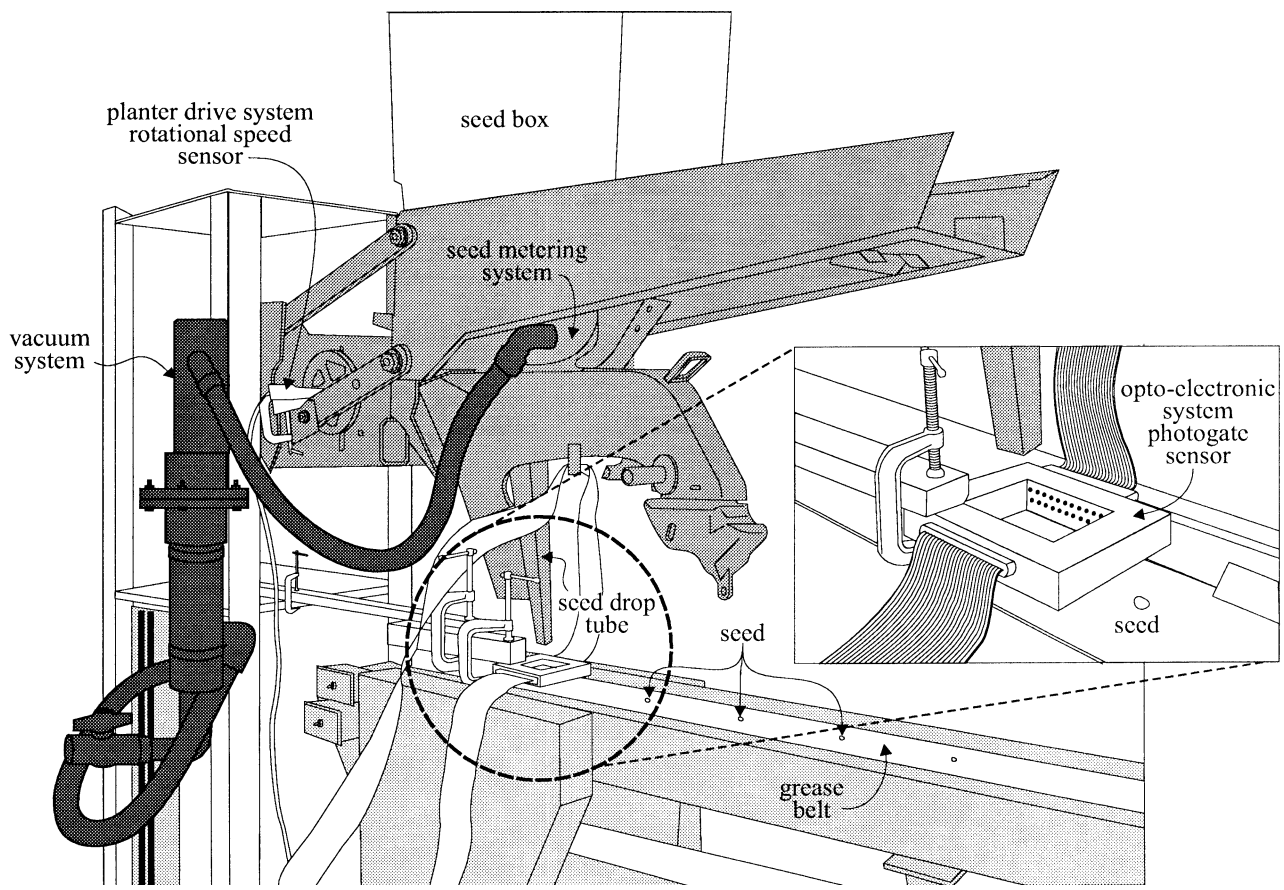

Figure 4–John Deere MaxEmerge II planter with the metal seed tube (disk openers and press wheel removed) mounted over the grease belt and with the opto-electronic sensor system in place for simultaneous measurement of seed spacing using both systems.

25 seeds and then started. As soon as the opto-electronic system signaled it had collected all the data, the grease belt and planter were stopped manually as quickly as possible. A tape measure was stretched out beside the seeds on the grease belt and the seed locations determined. The easily recognized pattern of misses and seeds on the grease belt (from the pattern of plugged holes in the seed plate) was compared to the seed spacing data from the opto-electronic system to match the seed spacings from the opto-electronic system with the same seed spacings as measured using the tape measure on the grease belt. Each time the planter/grease belt/opto-electronic system was run, it yielded about 20 seed spacings for which the different spacing measurements could be compared. This occurred because the reaction time for stopping the grease belt was slow enough that several of the 25 seeds for which the opto-electronic system had collected data were already off the end of the belt before the grease belt could be stopped for manual measurement of the seed spacings on the belt.

Data Analysis

Each test run with the grease belt and opto-electronic sensor system yielded 18 to 24 seed spacings, and each spacing was measured using three different methods. One measurement method involved using a tape measure with the seeds on the grease belt. Another method involved using the opto-electronic system with spacings calculated from the time intervals between seed drop events (timing only). The remaining method involved using the opto-electronic system with spacings calculated from the time intervals between seed drop events and front-to-back location of the seeds as they passed through the photogate, relative to the planter (timing and location).

The plugged holes in the planter seed plate resulted in some large misses in the seed spacing data. These misses were not normal for these planter configurations. Only spacings meeting the ISO definition for normal spacings were retained for the analyses, to prevent the artificial misses from biasing the results.

Two seed spacing error measurements were calculated for each grease belt seed spacing. The seed spacing measured from the grease belt was subtracted from the timing only opto-electronic seed spacing measurement to obtain the timing only seed spacing error. The seed spacing measured from the grease belt was subtracted from the timing and location opto-electronic seed spacing measurement to obtain the timing and location seed spacing error.

Two variance measures were obtained for each grease belt run. The variance of the timing only seed spacing errors, and the variance of the timing and location seed spacing errors were determined for each grease belt run.

The three planter configurations had seven or eight test runs each, with the two measures of variance of the errors described above. These data were analyzed using a split plot design, with planter configuration as the main unit treatment and measurement method as the sub-unit treatment. The observations of the variances of the seed spacing errors were considered paired (one for each measurement method) within each grease belt test run. The model used was that the variance of the seed spacing errors included effects from planter configuration, measurement method, and planter configuration by measurement method interaction. Differences were judged to be significant at a 5% level.

Results and Discussion

Variance of the Seed Spacing Errors

The opto-electronic system worked well in obtaining the seed spacing data. A graphical comparison of all the seed spacings obtained from the opto-electronic system versus the seed spacings obtained from the grease belt for the planter configuration with the John Deere tube at 3.2 km/h is shown in figure 5. Note that at each grease belt seed spacing value, the seed spacings obtained using the timing and location method have smaller variation than the seed spacings obtained using the timing only method.

The variances of the seed spacing errors for the two measurement methods in each test run are shown in table 1. The split plot analysis showed no significant effects on the variance of the seed spacing errors from planter configuration and planter configuration by measurement method interaction. The effect of measurement method on the variance of the seed spacing errors was highly significant, with an F value of 75.61 and a probability of 0.0001 for a higher F value occurring by chance. For each planter configuration, the variance of the seed spacing errors for the timing and location method was significantly less than for the timing only method. These results indicated that adding measurement of front-to-back seed drop location relative to the planter significantly improved electronic measurement of seed spacing over using the timing only method, in all cases.

The seed spacings obtained using the opto-electronic system with the timing and location method were correlated with the seed spacings obtained from the grease belt for each grease belt test run. The correlation coefficients were averaged over all runs and all planter configurations. The resulting average correlation coefficient was 0.951, indicating a strong correlation between the seed spacings obtained using the opto-electronic system with the timing and location method and the seed spacings obtained from the grease belt. This indicates the opto-electronic sensor system can be used

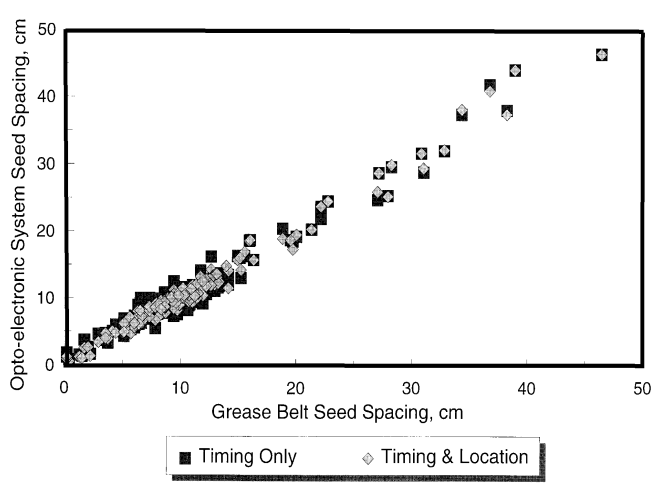

Figure 5–Comparison of seed spacings measured using the opto-electronic system with spacings measured using the grease belt for all the spacings from all the test runs with the planter configuration of the John Deere tube and a planter travel speed of 3.2 km/h.

Table 1. Variances of the seed spacing errors for the timing and location, and timing only measurement methods for each grease belt test run with each planter configuration*

Planter Configuration		Variance of the Seed Spacing Errors (cm^2)	
		Timing and Location	Timing Only
Straight metal tube at 3.2 km/h		0.48	1.68
		0.18	0.71
		0.16	0.55
		0.38	1.28
		0.17	1.43
		0.30	0.67
		0.22	1.30
		0.14	0.57
	Mean	0.25	1.02
	(Std. Dev.)	(0.12)	(0.45)
John Deere tube at 3.2 km/h		0.38	0.92
		0.20	1.30
		0.27	0.72
		0.14	0.82
		0.13	1.01
		0.13	1.86
		0.23	1.22
		0.22	0.29
	Mean	0.21	1.02
	(Std. Dev.)	(0.09)	(0.46)
Straight metal tube at 8.7 km/h		0.21	0.81
		0.25	1.21
		0.09	0.52
		0.15	0.58
		0.20	0.53
		0.11	0.91
		0.39	0.79
	Mean	0.20	0.76
	(Std. Dev.)	(0.10)	(0.25)

* Summary statistics are also given for each measurement method in each planter configuration.

instead of a grease belt test stand to obtain rapid quantitative evaluations of planter seed spacing uniformity.

The opto-electronic system may be helpful in planter development, as it can indicate the variation in front-to-back location where the seeds drop relative to the planter. A histogram showing the front-to-back seed drop locations relative to the planter for the straight metal tube at 3.2 km/h is shown in figure 6. Note that about 40% of the seeds fell at the 2.4 cm location and another 55% fell within ±0.6 cm of the 2.4 cm location. This means that about 95% of the seeds from that planter configuration fell within a 1.2 cm front-to-back location range relative to the planter. A planter configuration that gave a higher percentage of seeds falling within a smaller front-to-back location range would not have seed drop location affecting seed spacing uniformity. A planter configuration that gave seed drop locations spread over a wider range could have seed drop location affecting seed spacing uniformity.

Limitations

There are currently two limitations to use of the opto-electronic system. The photogate used for this experiment had 5 mm diameter LEDs and photo-transistors. Seeds that have an effective diameter less than about 3 mm have not consistently blocked enough of a light beam to trigger the photo-transistors reliably. A photogate with smaller

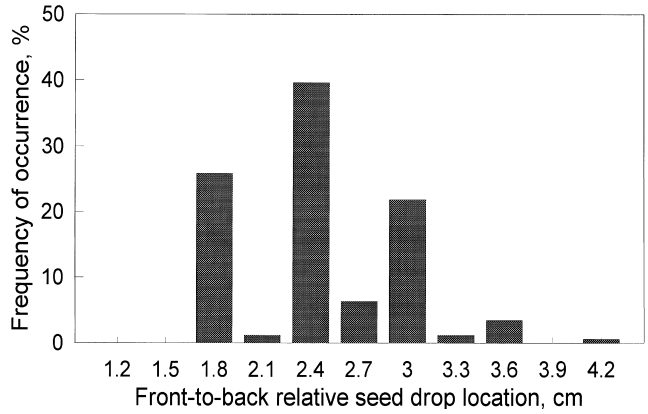

Figure 6–Frequency of seed drop events that occurred at each photo-transistor giving the front-to-back location of seed drops relative to the planter. The seed drop events represented were for all the normal seed spacings from all the test runs for the John Deere MaxEmerge II planter with the straight metal seed tube and a planter travel speed of 3.2 km/h.

diameter LEDs and photo-transistors would likely work with smaller seeds.

The second limitation relates to detection of multiple seeds passing through the photogate at the same time. This could occur if two small seeds fit into one seed plate cell and were dropped from the planter at the same time. The path of the light beams from the LEDs to the photo-transistors is across-the-row rather than down-the-row. In a situation with two seeds falling side-by-side across-the-row, one seed would be traveling in the shadow of the other seed, so no additional photo-transistors would be able to detect the additional seed. Multiple seeds passing through the photogate at the same time would be detected as long as the seeds were not falling side-by-side across-the-row. This indicates that the opto-electronic system can give accurate results with planter configurations giving uniform spacing. The system will also work well indicating planter configurations that do not give uniform seed spacing in terms of giving some multiples, but the system may indicate the seed spacing uniformity was somewhat better than actually occurred, because the system may have missed some multiples.

Seeds larger than the photo-transistors can be used with the opto-electronic sensor system. Some adjustment would be necessary to the section of the main program that analyzes the outputs from the digital ports and assigns seed locations to specific photo-transistors. These adjustments would be needed to account for the fact that larger seeds would block more than two adjacent photo-transistors at the same time.

Demonstration

For demonstration purposes, the opto-electronic system was used with the planter configuration of the straight metal tube and a travel speed of 3.2 km/h for a test run with 500 pelleted sugarbeet seeds. The same seed plate used for the tests described previously was used, except none of the seed holes was plugged. No data were collected from the grease belt during this test run. The computed results from the opto-electronic system are summarized in table 2. The one miss and two multiples indicate this planter configuration performed well in terms of uniform

Table 2. Summary of seed spacing uniformity data and analyses from the opto-electronic system for the demonstration test with 500 pelleted sugarbeet seeds and the John Deere MaxEmerge II planter operating at a travel speed of 3.2 km/h with the straight metal seed tube

Planter speed (km/h)	3.24
Number of seed spacings in test	499
Theoretical number of seed spacings in test	499
Target spacing (cm)	9.7
Average seed spacing (cm)	9.8
Sample standard deviation (cm)	1.14
Coefficient of variation (%)	11.6
Total measuring time (s)	54.03
Mean between-seed time (ms)	108.3
Number of ISO multiples	2
ISO Multiples index (%)	0.4
Number of ISO misses	1
ISO Miss index	0.2
Number of ISO normal spacings	495
ISO Quality of feed index (% of normal spacings)	99.4
ISO Precision	8.60

seed spacing from the planter metering unit. The ISO precision index of 8.6 also indicates the planter metering unit performed well in delivering uniform seed spacing. The histogram of the seed spacings (fig. 7) gives a graphical presentation of the seed spacing uniformity.

Conclusions

Use of the opto-electronic system with front-to-back seed drop location relative to the planter significantly improved electronic measurement of seed spacing in all cases. The ISO standard normal seed spacing measurements obtained with the opto-electronic system using seed interval timing and front-to-back seed drop location relative to the planter were strongly correlated (average r = 0.951) with measurements of the same spacings from a grease belt test stand.

The opto-electronic system can be used instead of a grease belt test stand to rapidly obtain quantitative evaluations of planter seed spacing uniformity with seeds having an effective diameter of about 4 mm or larger. It incorporates information on the front-to-back location of seed drop events relative to the planter with seed interval timing and planter travel speed to obtain the seed spacing data. The program analyzes the information and can output results in numerical (ISO standard indexes of quality-of-feed index, multiples index, miss index, and precision) and graphical (histogram of seed spacing) forms.

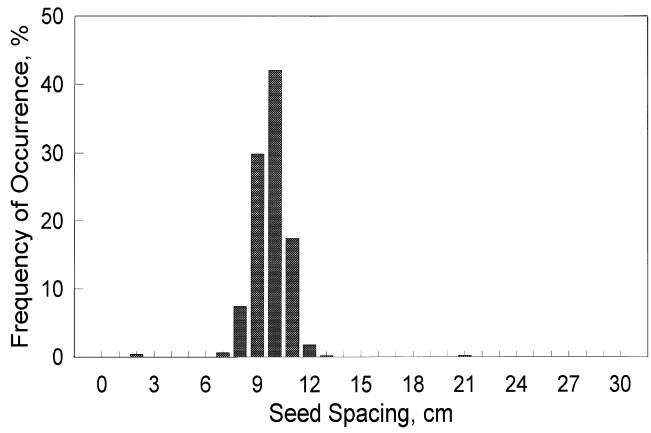

Figure 7–Frequency of occurrence for each 1 cm wide group of seed spacings measured using the opto-electronic system with location and timing from the demonstration test with 500 pelleted sugarbeet seeds and the John Deere MaxEmerge II planter with the straight metal seed tube and a planter travel speed of 3.2 km/h.

References

Brooks, D., and B. Church. 1987. Drill performance assessments: A changed approach. *British Sugar Beet Rev.* 55(4):50-51.

Hofman, V. L. 1988. Maximum yields need accurate planting. *The Sunflower* 14(1):10-11.

Hollewell, W. 1982. Drill performance assessments. *British Sugar Beet Rev.* 50(3):13-15.

International Organization for Standardization. 1984. ISO Standard 7256/1-1984 (E). Sowing equipment—Test methods. Part I: Single seed drills (precision drills). Genève, Switzerland: ISO.

Jaggard, K. 1990. Are there too many beets in our fields? *British Sugar Beet Rev.* 58(1):6-9.

Jasa, P. J., and E. C. Dickey. 1982. Tillage factors affecting corn seed spacing. *Transactions of the ASAE* 25(6):1516-1519.

Kachman, S. D., and J. A. Smith. 1995. Alternative measures of accuracy in plant spacing for planters using single seed metering. *Transactions of the ASAE* 38(2):379-387.

McLean, K. A. 1974. Precision drill development and performance appraisal. *ADAS Quart. Rev.* 13:1-8.

Prince, J. and M. Durrant. 1990. Progress in seed quality and seed treatments. *British Sugar Beet Rev.* 58(4):4-6.

Smith, J. A., K. L. Palm, C. D. Yonts, and R. G. Wilson. 1991. Seed spacing accuracy of sugarbeet planters. ASAE Paper No. 91-1551. St. Joseph, Mich.: ASAE.

Thomson, M. 1986. Drill performance assessments. *British Sugar Beet Rev.* 54(4):11-14.