ESTIMATING HYDRAULIC CONDUCTIVITY FROM DRAINAGE PATTERNS DERIVED FROM DEM - A CASE STUDY IN THE OREGON CASCADES B. P. Grudzinski[1], W. Luo[1], D. Pederson[2], [1]Department of Geography, Northern Illinois University, DeKalb, IL 60115, [1]Department (Z1555588@students.niu.edu; wluo@niu.edu), [2]Department of Geosciences, University of Nebraska-Lincoln, Lincoln, NE 68588-0340 (dpederson2@unl.edu)

Introduction: Hydraulic conductivity is an important parameter in hydrology which describes the ease with which water moves through porous media. This parameter is also important in understanding the hydrology of Mars. On Earth, this parameter can be measured by conducting controlled experiments in laboratories or conducting pumping tests in the field. This study introduces a new method of estimating hydraulic conductivity from drainage dissection pattern derived from digital elevation model (DEM). This method can be applied to Mars if it is robustly tested on Earth.

Methodology: Figure 1 illustrates an unconfined aquifer where groundwater discharges into a channel. The aquifer thickness is *H*, the channel depth is *d*, and the flow length is *L*. Under DuPuit assumption, the discharge per unit width (u=1) of the channel *q'* is [1]:

$$q' = \frac{1}{2} K \left(\frac{H^2 - (H-d)^2}{L} \right) \qquad (1)$$

Where *K* is hydraulic conductivity. Rearrange Equation (1) gives:

$$K = \frac{2q'L}{H^2 - (H-d)^2} \qquad (2)$$

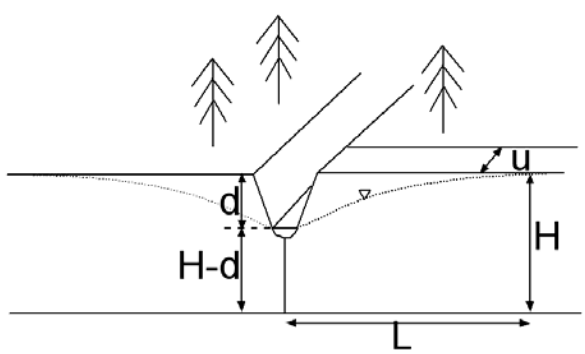

Figure 1. Diagram illustrating DuPuit Equation

In Equation (2), *q'* can be estimated from precipitation, *d* and *L* can be derived from DEM data. If we can assume a reasonable aquifer thickness *H*, *K* can be calculated from Equation (2).

Study Area and Data: To test this method, we apply it to the Cascade Range region in Oregon. The Cascade Range region is chosen because it has a sharp contrast in dissection pattern, which can be derived from DEM using a morphology-based algorithm [2], and the hydraulic conductivity is documented in the literature [3-4]. The study area is located between 121.31° W to 122.75° W and between 43.31°N to 45.26°N and has two prominent regions consisting of the Western Cascades which are of the Tertiary age and the High Cascades which are of the Quaternary age. The Western Cascades have lower elevation, higher relief and a higher drainage density than the High Cascades [2]. The DEM data is obtained from National Elevation Dataset at USGS with 37.315 meter resolution. The Precipitation data is obtained from PRISM website (http://prism.oregonstate.edu/).

Parameter Estimates and Results: We estimated the channel depth *d* from DEM by subtracting the channel elevation from its shoulder elevation, which is approximated by 75 percentile value within a moving circular window along the channel [5]. Because the depth estimated this is only defined along the channel, not at every cell, we averaged depth over the watershed that drains into each channel and calculate K at watershed level. The discharge *q'* is estimate to be 30% of the precipitation value [6]. The aquifer thickness *H* is taken as 500 m [6]. The flow length *L* is inversely related to drainage density, which has been derived from DEM in a previous study [2]. Figure 2 shows the result of K estimated in the study area by watershed that drains into each channel. Zonal mean by geologic units is consistent with the values documented in the literature for the Tertiary unit but underestimate that for the Quaternary unit (Table 1).

Table 1. Zonal Statistics of K (m/s) and comparison

	Zonal mean	Zonal St. Dev.	Literature [3,4]
Q	1.64×10^{-9}	4.17×10^{-9}	10^{-7}
T	2.4×10^{-10}	7.7×10^{-10}	10^{-10}

Discussion: The proposed method correctly estimated the hydraulic conductivity contrast between Tertiary and Quaternary in the study area. Our estimate for Tertiary is consistent with literature and that for Quaternary is smaller. The uncertainties may come from the assumed uniform aquifer thickness and errors in estimating channel depth. Further study is needed before it can be applied to Mars.

References: [1] Deming, D. (2002) Introduction to Hydrogeology, McGraw-Hill. [2] Luo. W. and Stepinski, T. (2008) *Geomorphology*, *99*, 90–98. [3] Ingebritsen, S.E. et al. (1992) JGR, 97, 4599–4627. [4] Ingebritsen, S.E. et al. (1994). USGS Professional Paper, vol. 1040-L. [5] Barnhart, C.J. *JGR* doi:10.1029/2008JE003122, in press. [6] Conlon et al. (2005) USGS Scientific Investigations Report 2005-5168.

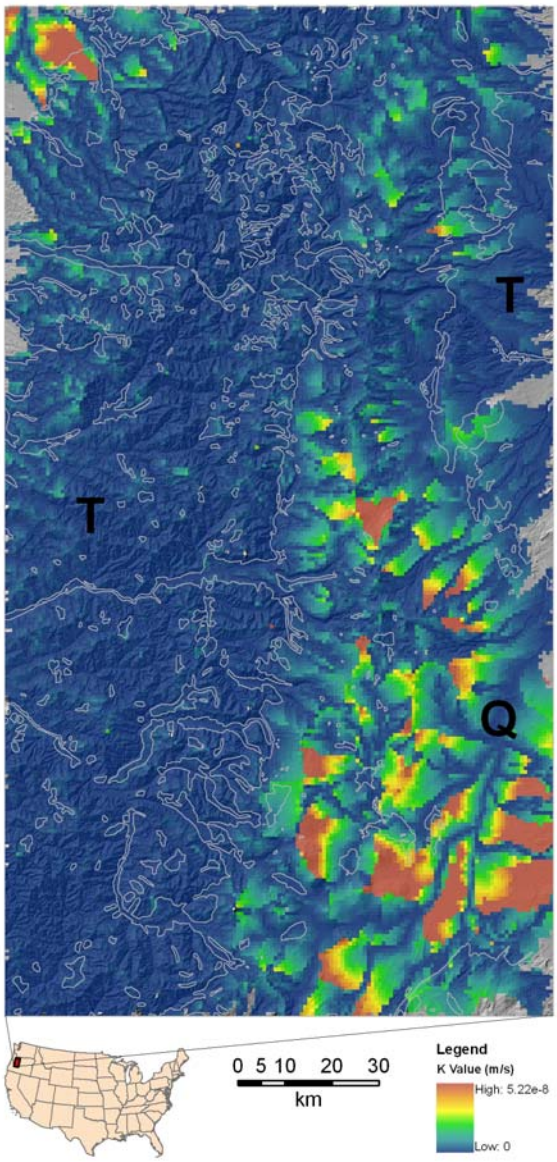

Figure 2. Hydraulic conductivity (K) estimate draped on shaded relief map. Gray lines delineate geologic age (Q = Quaternary, T = Tertiary). Zonal statistics are shown in Table 1.