University of Nebraska - Lincoln
DigitalCommons@University of Nebraska - Lincoln

Faculty Publications in the Biological Sciences | Papers in the Biological Sciences

1-1-2004

Predicting predation efficiency of biocontrol agents: linking behavior of individuals and population dynamics

Brigitte Tenhumberg
University of Nebraska - Lincoln, btenhumberg2@unl.edu

Follow this and additional works at: http://digitalcommons.unl.edu/bioscifacpub

Part of the Life Sciences Commons

Tenhumberg, Brigitte, "Predicting predation efficiency of biocontrol agents: linking behavior of individuals and population dynamics" (2004). *Faculty Publications in the Biological Sciences.* Paper 184.
http://digitalcommons.unl.edu/bioscifacpub/184

This Article is brought to you for free and open access by the Papers in the Biological Sciences at DigitalCommons@University of Nebraska - Lincoln. It has been accepted for inclusion in Faculty Publications in the Biological Sciences by an authorized administrator of DigitalCommons@University of Nebraska - Lincoln.

In: Pahl-Wostl, C., Schmidt, S., Rizzoli, A.E. and Jakeman, A.J. (eds), Complexity and Integrated Resources Management, Transactions of the 2nd Biennial Meeting of the International Environmental Modelling and Software Society (Vol 2), Manno, Switzerland, iEMSs, 2004. pp. 864-869. http://www.iemss.org/iemss2004/proceedings/iEMSs2004_vol2.pdf

Predicting predation efficiency of biocontrol agents: linking behavior of individuals and population dynamics

Brigitte Tenhumberg

School of Natural Resources, University of Nebraska-Lincoln, Nebraska, USA, btenhumberg2@unl.edu

Abstract: Behavioral ecology and population ecology are two separate branches of ecology; studies linking the effect of individual behavior and population dynamics are rare. This paper connects a stochastic optimal foraging model of insect predators with an age structured population model of its prey. I modeled syrphid larvae feeding on cereal aphids, an interaction critical to cereal crops in Germany. The key stochastic element in this model is the foraging success of predators, which influences survival and developmental time of predators and mortality of the prey population. The model predicts that the level of control incurred by predators is highest if predators arrive when prey numbers are still small, the growth rate of prey population is small, and predator density is moderately high. If the number of predators per prey was high or prey distribution was much aggregated, predators were less successful in finding prey. As a result predation efficacy was reduced.

Keywords: Behavior; Population Dynamics; Biocontrol; Escalator Boxcar Train

1. INTRODUCTION

Mortality caused by insect predators and parasitic wasps is a major biotic factor shaping the population dynamics of any insect prey (host) species [Symondson et al., 2002] and can be exploited for biocontrol. The impact of predators (parasitic wasps) on their prey (host) population likely depends on their foraging behaviour. There is a large body of literature documenting different factors influencing foraging behavior ("optimal foraging theory"), but individual level responses do not necessarily affect population level processes. For example, Tenhumberg et al [2001] demonstrated that the behavioral response of individual female parasitic wasps, *Cotesia rubecula*, can compensate for the effect of small scale variation in host distribution. This results in equal reproductive success over a range of small scale distribution patterns. In this paper I explicitly link individual behavior with population processes by simulating the impact of "optimally" behaving insect predators on their prey population, and examine the conditions under which predators can prevent pest outbreaks.

I used the economically important aphid species, *Sitobion avenae* (prey) and its syrphid predator, *Episyrphus balteatus* as a model system. In general, the composition of aphid species in German winter wheat fields includes *S. avenae*, *Metopolophium dirhodum*, and *Rhopalosiphum padi* [Tenhumberg, 1992]. Only the first two species occur in high numbers, but they generally feed on separate plant parts: *M. dirhodum* feeds on leafs, while *S. avenae* feeds mainly on the ear and has the highest impact on the yield. In western Germany syrphids are by far the most important predators of cereal aphids (~80% of all stenophagous predators) and *E. balteatus* constitutes >90 % of the composition of syrphid species [Groeger, 1992; Tenhumberg, 1992]. Other insects contributing to the control of cereal aphid populations include lady beetles, parasitic wasps, and spiders.

2. MODEL DESCRIPTION

2.1 Aphid Model (*S. avenae*)

To simulate the population dynamics of aphids I used the "escalator boxcar train" (EBT) technique [Leffelaar, 1999], which can be used to model continuous time populations with mixed age distributions. Before a simulation starts, the developmental axis of one stage is broken up into a number of classes or boxcars, each with identical developmental width. Here, we constructed two chained EBTs, one for larval aphids and one for adult aphids. Note that aphid eggs do not occur

Copyright (c) 2004 Brigitte Tenhumberg.

during the growing season of winter wheat. Each EBT consisted of 10 boxcars representing different age classes. All individuals of the aphid population were distributed among the boxcars. Individuals of a particular boxcar had unique vital rates, so the model could account for stage and age specific mortality and reproduction rates. The developmental process was simulated by shifting individuals continuously to a higher stage of development at the same rate. Newborn aphids entered the first boxcar of the larvae-EBT; unless dying they successively moved through all boxcars of the larvae-EBT and the adult-EBT and were removed from the population after reaching the end of the last boxcar, which is their maximum life span. The EBT technique is described in detail in Leffelaar [1999].

Model parameters were estimated based on laboratory studies on *S. avenae* at 20 °C [Dean, 1974; Simon et al., 1991] and listed in Table 1. According to Dean [1974] 97% of aphid larvae survive to adult phase and the average adult lifespan is 22 days. We assume that juvenile survival rate is constant and adult survival follows a Weibull function. In general, with increasing temperatures larval development increases and survival of adult aphids decreases; reproduction and the intrinsic growth rate increase up to 20°C and decrease at higher temperatures [Dean, 1974]. The model does not include the effect of temperature directly; however the sensitivity analysis revealed the effect of changes in the developmental time and reproduction.

The simulation model predicts exponential growth of aphids. Real aphid populations are regulated by density dependent mechanisms, such as an increasing proportion of migrating aphids (alatifome = aphids with wings) [Watt and Dixon, 1981], presumably limiting aphid numbers to < 1000 aphids per shoot. As this paper is concerned with predator-prey interactions at much lower aphid densities we ignore density dependent mechanisms.

Table 1: Parameters used in aphid model. Daily rates were normalized through division by λ. (a = 1.05, b=011.5, c=0.040976, x is time in days, κ = 3.5, and ρ = 0.034)

	Larvae-EBT (L)	Adult-EBT (A)	References
Stage length, D	D_L = 8 days	D_A = 45 days	[Dean, 1974]
Number of boxcars, n	10	10	
Developmental width, γ	$\gamma_L = D_L/n$ = 0.8	$\gamma_A = D_A/n$ = 4.5	
Mortality per day, μ	$m_L = 0.003$	$m_A = kr\,(r\,x)^{k-1}$	modified from Dean [1974]
Age dependent reproduction , ϕ	0	$f_x = a\ln(bx)e^{-cx}$	modified from Simon et al. [1991]

2.2 Syrphid model

The syrphid model has been published elsewhere [Tenhumberg et al., 2000], so I present only an overview here. The model uses stochastic dynamic programming to calculate the optimal state-dependent behavior that maximizes lifetime reproduction. At any point in time syrphid larvae have three behavioural options: foraging for aphids, resting, or pupating. Syrphid larvae may find food while foraging; the probability of catching aphids is a function of aphid density and distribution. Syrphid larvae need food for maintenance and growth; but foraging uses up energy and increase the risk of being preyed upon. Syrphid reproduction is a function of size, consequently the higher the accumulated weight of a syrphid when pupating, the higher is her expected future reproductive success. Conversely, the longer a syrphid postpones pupating to accumulate a higher weight, the more likely she is to die as a result of starvation or predation. What behavior is best at any point in time depends on the states: gut content, weight, age, and food availability (mean and variance). Syrphid larvae estimate their chances to find food based on the distribution of past prey encounters [weighted maximum likelihood estimate, Mangel, 1990]. Foragers catch *A* prey units, where *A* is a negative binomial random variable with some mean *m* and an aggregation index *k*:

$$p_A = P\{A = a\} = \left[\frac{\Gamma(k+a)}{a!\Gamma(k)}\right]\left(\frac{m}{m+k}\right)^a\left(\frac{k}{m+k}\right)^k$$

where $\Gamma(k)$ is a gamma function [Krebs, 1989], and m is syrphids expectation of average food availability. Based on field observations on cereal aphids [Ohnesorge and Viereck, 1983], I set k=2, indicating a slightly aggregated distribution.

2.3 Linking predator and prey model

The aphid and syrphid models were connected through syrphid feeding activity, imposing additional mortality on the aphid population (see Figure 1). In turn, aphid density influenced syrphid foraging success, and consequently syrphid performance (rate of weight increase, starvation). To facilitate comparison with empirical data I will present syrphid density per m^2 and aphid density per shoot (assuming there are 550 shoots per m^2).

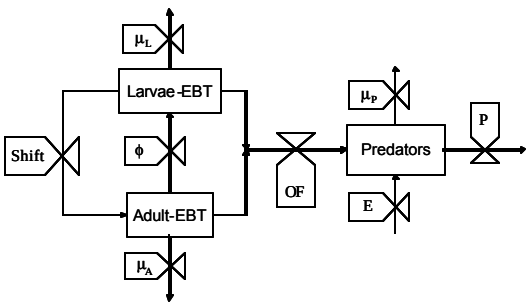

Figure 1. Flow Chart. μ indicates mortality, ϕ age dependent reproduction, "shift" individuals shifting from larvae-EBT to adult-EBT, E small syrphid larvae enter the model, P syrphid larvae pupate, and OF optimal consumption rate of predators.

Egglaying behaviour of syrphid females is influenced by aphid abundance such that females only oviposit if aphid populations are above some threshold density, which varies between years [Tenhumberg and Poehling, 1991], and can be as low as 0.2 aphids per shoot [Chambers, 1991]. Syrphid larvae hatch after three days [Tenhumberg, 1992]. Analogous to the egg distribution, I modeled the distribution of new syrphid larvae entering the model (freshly hatched) as a normal distribution, with the first larvae entering the model after aphid density reached some threshold density.

Each time step the interactions between aphid and syrphid populations were modeled sequentially.

- The change in aphid population for one time step (=10 hours) was calculated based on the EBT model.
- At the beginning of each time step, the model determined optimal decisions of predators, which follow from the tradeoff between the likelihood of accumulating more weight and of dying.
- The per capita aphid consumption was simulated based on the probability distribution determined by aphid density and distribution.
- Then the model calculated the changes in individual states: age increases; gut content increased according to the number of prey consumed; some of the gut content was used for maintenance and weight increase. If gut content decreased below a threshold predators died of starvation.
- The model removed pupating and dying syrphid larvae from the population and new arriving larvae entered the population.
- The total number of predated aphids were removed according to their relative frequency in the boxcars of larvae-EBT and adult-EBT. This assumes that prey encounter is random and syrphids do not have any preferences for prey size.

2.4 Sensitivity Analysis

For the sensitivity analysis I employed Latin Hypercube Sampling [LHS Blower and Dowlatabadi, 1994], which is a type of stratified Monte Carlo sampling. This technique has been used in the analysis of complex ecological models elsewhere [Rushton et al., 2000a; Rushton et al., 2000b; Tenhumberg et al., in press]. LHS is an extremely efficient sampling design because each value of a parameter is only used once in the analysis. The estimation of uncertainty for each parameter is modeled by treating each parameter as a random variable. Probability distribution functions (pdfs) are defined for each parameter. I used uniform distributions, but other distributions are possible. I broke each of these distributions into N intervals, each of equal probability. I then chose the midpoint of each interval and generated an LHS table as an N * K matrix, where N is the number of simulations and K is the number of sampled input parameters. I chose N=100 and K=10. 12 parameter combinations were excluded from the analysis because they either resulted in an exponential decline of the aphid population without syrphids present or aphid populations increased too rapidly for syrphid larvae to have any effect. I repeated each run 20 times because the syrphid model is stochastic; therefore the whole sensitivity analysis is based on 1760 simulations (88*20). All simulations are stopped after 33 days or 80 time steps.

I used partial rank correlation coefficients (PRCC) to evaluate statistical relationships between each input parameter and each output parameters while keeping all other input parameters constant at their

expected value [Conover, 1980]. This partial rank correlation is based on ranks of the results and of the parameter values within their columns, rather than on the raw values. This analysis determines the independent effect of each parameter, even if the parameters are correlated. The sign of the PRCC indicates the qualitative relationship between input and output variable, and the relative importance of the input variables can be directly evaluated by comparing the PRCC values. The calculation of PRCC is described in Blower [1994].

3. RESULTS AND DISCUSSION

Figure 2 illustrates a typical simulation run using the parameters listed in Table 1. Overall 70 syrphid larvae hatched, but as a result of pupation and larval mortality the maximum syrphid density was only 39 individuals per m^2. When the last syrphid larvae disappeared (32 days) aphid density reached 30 individuals per shoot. For comparison, in the absence of predators aphid population was 475 individuals per shoot. In the real world the ears of winter wheat plants usually start drying up around 20-30 days after syrphid larvae appear [Tenhumberg, 1992] and the resulting rapid decrease in plant quality causes the break down of aphid populations through elevated aphid mortality and development of a large proportion of migrating aphids [Watt and Dixon, 1981]. Thus, aphid populations are unlikely to increase considerably after all syrphids have pupated.

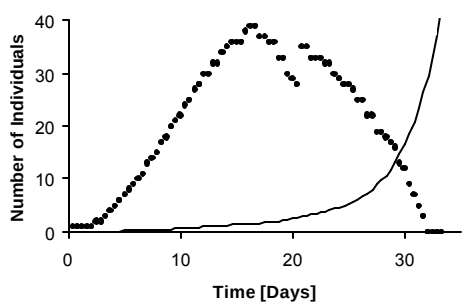

Figure 2. Simulated population dynamics of aphids (solid line) and syrphid larvae (dotted line), using parameter values from Table 1. 1st syrphid larva appeared when aphid density > 0.05.

If syrphid predators have such high potential to control aphid populations, why do aphid populations regularly outbreak in Northern Germany? The sensitivity analysis (see Table 2) sheds some light on this question. First, I will discuss the results of aphid parameters, then the parameters specifying the interactions of predator and prey populations.

A. Aphid specific parameters:

Most prominent factors influencing maximum aphid density (A_{max}) are the parameters of the age dependent reproduction curve (ϕ, Table 1) and larval developmental time which determines how quickly aphids start reproducing (Table 2). In general, the larger the values of *a* and *b* the higher is the maximum reproductive output (ϕ_{max}). *c* is inversely correlated to aphid reproductive output: the smaller *c* the larger ϕ_{max} and the slower the decrease in the age dependent reproduction. Within the parameter range tested the effect of larval and adult survival is small (small PRCC's and only κ is significant).

Reproduction and developmental time are influenced by the temperature in the field. If the weather is warm, aphid development is short and the peak reproduction is reached earlier [Dean, 1974]. According to the results of the sensitivity analysis these conditions greatly promote high aphid densities. Conversely, aphid populations usually reach much higher densities in northern Germany (cooler climate) compared to southern Germany (warmer climate) [Tenhumberg and Poehling, 1995].

B. Predator specific parameters:

The input parameters influencing predator-prey interactions are aphid density when 1st syrphid larvae appear (synchronization), the total number of predators and aphid distribution, which influences predator foraging success. The impact of syrphid predators on aphid population is not only influenced by input parameters, but also by mortality (i.e. starving) and behavioral response and of syrphid larvae (functional response, timing of pupation). As an indication of syrphid responses I included in the sensitivity analysis the maximum number of syrphids (S_{max}), the time period over which syrphid larvae were present (syrphid days, S_d), and the average per capita consumption (C). In the following, I will refer to the PRCC's in colum S_{max} as PRCC -S_{max}, and so on.

Synchronization: By far most important in keeping aphid numbers low is the synchronization between aphids and syrphid predators (PRCC-A_{max}=0.89). A high aphid density when the 1st predators arrive results in high food availability and syrphid predators increase their consumption rate (large positive PRCC-C). This functional response is consistent with empirical findings [Tenhumberg, 1995]. As a response to high food availability syrphid larvae accumulate weight quicker and

pupate at an earlier age [Tenhumberg et al., 2000]. As a consequence, S_d and S_{max} are shorter (negative PRCC-S_d and S_{max}), which means the growth rate of aphid populations is slowed down for a shorter period of time and the maximum number of predators is smaller. So, the reduced larval period of syrphids counteracts somewhat the increased feeding rate of syrphid predators.

Predator abundance: Interestingly the effect of the cumulative number of syrphid larvae appearing on maximum aphid density is much smaller than the effect of synchronization. The reason for this is interspecific competition resulting in decreasing per capita consumption with increasing predator density (negative PRCC-C), and syrphid larvae need a longer time to accumulate a sufficiently large weigh t to pupate (positive PRCC-S_d).

Aphid distribution: The degree of aggregation of aphid distributions also influences maximum aphid densities (negative PRCC-A_{max}) through syrphid mortality and foraging efficiency. A high degree of aggregation (small k-value) translates to large variation in foraging success between capturing bouts, which in turn increases the probability of starvation because of the high frequency of successively finding no or not enough food. The increased mortality rate results in overall reduced syrphid densities (positive PRCC-S_{max}). If aphid distributions are highly aggregated the per capita consumption of predators decreases (positive PRCC-C). As a result of the slow rate of weight accumulation syrphid larvae need a longer time to pupate, which increases the length of the period where syrphid predators are present (negative PRCC-S_d).

Table 2: Partial rank correlation coefficients (PRCC) of maximum aphid density, A_{max}, syrphid maximum density, S_{max}, number of days syrphid larvae are present, S_d, and the average per capita consumption per day of present larvae, C. Absolute values >0.235 (>0.19) are significant at p=0.01 (p=0.05) and are indicated by ** (*). Range specifies the rage over which input parameters were v aried in the sensitivity analysis. The analysis is based on 88 different parameter combinations.

Input variables	Parameter	Range	A_{max}	S_{max}	S_d	C
Reproduction	*a*	4-7	0.651**	0.210*	- 0.279**	0.206*
	b	1-3	0.857**	0.120	- 0.441**	0.472**
	c	0.3-0.7	- 0.704**	- 0.190*	0.251**	- 0.274**
Adult mortality	κ	2-5	0.292**	0.034	- 0.200*	0.182
	ρ	0.025-0.05	0.058	- 0.161	- 0.113	0.044
Larval mortality		0.02-0.1	- 0. 137	- 0.118	0.162	- 0.062
Larvae DT		6-9	- 0.767**	- 0.136	0.489**	- 0.509**
Aphid distribution	*k*	0.01-2	- 0.232*	0.583**	- 0.564**	0.640**
Threshold Density		0.01-1	0.891**	- 0.273**	- 0.596**	0.812**
Total predator number		50-100	- 0.380**	0.960**	0.265**	-0.195*

4. CONCLUSIONS

This model suggests that syrphid larvae are most likely to suppress aphid outbreaks if syrphid larvae arrive when aphid density is still is small. Differences in the synchronization between syrphid and aphids populations are hypothesized to be the main reason why in northern Germany aphid populations regularly reach outbreak densities in winter wheat fields (if no insecticides are applied) and in southern Germany not [Tenhumberg and Poehling, 1995].

The potential of syrphid larvae to prevent outbreak densities of aphid populations is also influenced by intraspecific competition and syrphid responses to aphid population, such as timing of pupation, starvation and foraging success. The latter is not only dependent on aphid density but also aphid distribution. Ignoring these responses in models forecasting the risk of pest outbreaks [e.g., Gosselke et al., 2001] might result in overestimating predation efficiency and consequently erroneous risk assessment.

5. ACKNOWLEDGEMENTS

I thank A. J. Tyre for providing R- functions to calculate LHC matrix and PRCC's. His editorial comments also greatly improved this paper.

6. REFERENCES

Blower, S.M., and H. Dowlatabadi, Sensitiv ity and uncertainty analysis of complex models of disease transmission: an HIV model, as an example, *International Statistical Review, 62*, 229-243, 1994.

Chambers, R.J., Oviposition by aphidopha-gous hoverflies (Diptera: Syrphidae) in relation to aphid density anddistribution in winter wheat, p. 115-121, *In* L. Polgar, et al., eds. Behaviour and impact of Aphidophaga. SPB Academic Publish-ing, Den Haag, Netherlands, 1991.

Conover, W.J., *Practical nonparametric statis-tics*. 2 ed. John Wiley and Sons Inc, New York.1980.

Dean, G.J., Effect of temperature on cereal aphids *Metopolophium dirhodum* (Wlk), *Rhopalosiphum padi* (L.) *Macrosiphum avenae* (F.) (Hem., Aphididae), *Bulletin of Entomological Research, 63*, 401-409, 1974.

Gosselke, U., H. Triltsch, D. Rossberg, and B. Freier, GETLAUS01 - the latest version of a model for simulating aphid population dy-namics in dependence on antagonists in wheat, *Ecological Modelling*, *145*, 143-157, 2001.

Groeger, U., Untersuchungen zur Regulation von Getreideblattläusen unter Einfluß der Landschaftsstruktur, *Agrarökologie*, *6*, 1-169, 1992.

Krebs, C.J., *Ecological Methodology* Har-per and Row, New York, USA.1989.

Leffelaar, P.A., *On systems analysis and simu-lation of ecological processes with examples in CSMP, FST and FORTRAN.* 2nd ed. Kluwer Academic Publishers, Dordrecht, The Nether-lands.1999.

Mangel, M., Dynamic information in uncertain and changing Worlds, *Journal of Theoretical Biology, 146*, 317-332, 1990.

Ohnesorge, B., and A. Viereck, Zur Befalls-dichteabschätzung bei Getreideblattläu-sen, *Zeitschrift für Pflanzenkrankhei-ten und Pflanzenschutz*, *90*, 213-219, 1983.

Rushton, S.P., P.W.W. Lurz, J. Gurnell, and R. Fuller, Modelling the spatial dynamics of parapoxvirus disease in red and grey squirrels: a possible cause of the decline in the red squirrel in the UK, *Journal of Applied Ecology, 37*, 997-1012, 2000a.

Rushton, S.P., G.W. Barreto, R.M. Cormack, D.W. Macdonald, and R. Fuller, Model-ing the effects of mink and habitat fragmentation on the water vole, *Journal of Applied Ecology*, *37*, 475-490, 2000b.

Simon, J.C., C.A. Dedryver, J.S. Pierre, S. Tanguy, and P. Wegorek, The influence of clone and morph on parameters of intrinsic rate of increase in the cereal aphids *Sitobion avenae* and *Rhopalo-siphum padi*, *Entomologia Experimen-talis et Applicata*, *58*, 211-220, 1991.

Symondson, W.O.C., K.D. Sunderland, and M.H. Greenstone, Can generalist predators be effective biocontrol agents, *Annual Review of Entomology*, *47*, 561-594, 2002.

Tenhumberg, B., Untersuchungen zur Popula-tionsdynamik von Syrphiden in Winter-weizenbeständen und Quantifi-zierung ihrer Bedeutung als Antago-nisten von Getreideblattläusen. PhD, University of Göttingen, Gòttingen (FRG), 1992.

Tenhumberg, B., Estimating predatory efficiency of *Episyrphus balteatus* (Diptera: Syrphidae) in cereal fields, *Environmental Entomology*, *24*, 687-691, 1995.

Tenhumberg, B., and H.M. Poehling, Studies on the efficiency of syrphid larvae, as predators of aphids in winter wheat, p. 281-288, *In* A. Dixon and I. Hodek, eds. Behaviour and impact of Aphidophaga, Proceedings of the 4th meeting of the IOBC working group. SPB Academic Publishing,, Den Haag, Nether-lands, 1991.

Tenhumberg, B., and H.M. Poehling, Syrphids as natural enemies of cereal aphids in Germany: Aspects of their biology and efficacy in different years and regions, *Agriculture Eco-systems & Environment*, *52*, 39-43, 1995.

Tenhumberg, B., A.J. Tyre, and B.D. Roitberg, Stochastic variation in food availability in-fluences weight and age at maturity, *Journal of Theoretical Biology*, *202*, 257-272, 2000.

Tenhumberg, B., M. Keller, H.P. Possingham, and A.J. Tyre, The effect of resource aggre gation at different scales: optimal foraging behaviour of *Cotesia rubecula*, *American Naturalist*, *158*, 505-518, 2001.

Tenhumberg, B., A.J. Tyre, A.R. Pople, and H.P. Possingham, Do harvest refuges buffer kan-garoos against evolutionary responses to selective harvesting, *Ecology*, in press.

Watt, A.D., and F.G. Dixon, The role of cereal growth stages andcrowding in the induction of alatae in *Sitobion avenae* and its conse-quences for population growth., *Ecological Entomology*, *6*, 441-447, 1981.