University of Nebraska - Lincoln
DigitalCommons@University of Nebraska - Lincoln

Peter Dowben Publications | Research Papers in Physics and Astronomy

11-11-2007

Optimization of the 3 m TGM beamline, at CAMD, for constant initial state spectroscopy

Yaroslav Losovyj
Louisiana State University, Baton Rouge, LA

Ihor Ketsman
University of Nebraska - Lincoln, iketsman@gmail.com

Eizi Morikawa
Louisiana State University, Baton Rouge, LA

Zhenjun Wang
University of Nebraska - Lincoln

Jinke Tang
University of New Orleans, New Orleans, LA

See next page for additional authors

Follow this and additional works at: http://digitalcommons.unl.edu/physicsdowben

Part of the Physics Commons

Losovyj, Yaroslav ; Ketsman, Ihor; Morikawa, Eizi ; Wang, Zhenjun; Tang, Jinke; and Dowben, Peter, "Optimization of the 3 m TGM beamline, at CAMD, for constant initial state spectroscopy" (2007). *Peter Dowben Publications.* Paper 193.
http://digitalcommons.unl.edu/physicsdowben/193

This Article is brought to you for free and open access by the Research Papers in Physics and Astronomy at DigitalCommons@University of Nebraska - Lincoln. It has been accepted for inclusion in Peter Dowben Publications by an authorized administrator of DigitalCommons@University of Nebraska - Lincoln.

Authors
Yaroslav Losovyj, Ihor Ketsman, Eizi Morikawa, Zhenjun Wang, Jinke Tang, and Peter Dowben

This article is available at DigitalCommons@University of Nebraska - Lincoln: http://digitalcommons.unl.edu/physicsdowben/193

Published in *Nuclear Instruments and Methods in Physics Research Section A: Accelerators, Spectrometers, Detectors and Associated Equipment* 582:1, (November 11, 2007), pp. 264-266; doi:10.1016/j.nima.2007.08.127
Proceedings of the 14th National Conference on Synchrotron Radiation Research - SRI 2007.
Copyright © 2007 Elsevier B.V. Used by permission. http://www.sciencedirect.com/science/journal/01689002

Published online August 17, 2007.

Optimization of the 3 m TGM beamline, at CAMD, for constant initial state spectroscopy

Yaroslav Losovyj[a, b, d], Ihor Ketsman[b], Eizi Morikawa[a], Zhenjun Wang[b], Jinke Tang[c] and Peter Dowben[b]

[a] Center for Advanced Microstructures and Devices, Louisiana State University, 6980 Jefferson Highway, Baton Rouge, LA 70806, USA
[b] Department of Physics and Astronomy, Nebraska Center for Materials and Nanoscience, Behlen Laboratory of Physics, University of Nebraska–Lincoln, P.O. Box 880111, Lincoln, NE 68588-0111, USA
[c] Department of Physics, University of New Orleans, New Orleans, LA 70148, USA
[d] Corresponding author: Center for Advanced Microstructures and Devices, Louisiana State University, 6980 Jefferson Highway, Baton Rouge, LA 70806, USA. Tel. 225 578-9368; fax 225 578-6954; email: ylosovyj@lsu.edu

Abstract
The 3 m toroidal grating monochromator (TGM) VUV beamline at CAMD/LSU was realigned to achieve better illumination of the monochromator gratings with the goal of substantially increasing the flux at the higher photon energies. This is partly accomplished through a tilting of the monochromator (by about of 13.5°), with respect to the plane defined by the synchrotron, providing a smaller grazing angle at the initial mirrors. The improved performance of the beamline permits resonant photoemission studies at Gd 4d core threshold without resorting to second order light, which we demonstrate for Gd doped HfO_2.

Keywords: Oxide dielectric layers, Hafnium oxide, Gd doping, Resonant photoemission

1. Introduction

The 3 m toroidal grating monochromator (3 m TGM) beamline at CAMD/LSU has an unusual beamline geometry. This geometry addresses some deficiencies typical of the shorter toroidal grating monochomators: dramatic trade-offs between the photon energy range of the monochromator and resolution. As a demonstration of the capabilities of the beamline-photoemission endstation combination, we present the resonant photoemission data for 3% Gd doped HfO_2, though the Gd 4d core threshold. These measurements would normally be at the limits of what should be possible for a shorter TGM beamline.

2. Experimental details

The basic concept of the 3 m TGM beamline involved tilting the monochromator out of the plane of the synchrotron, as indicated in Figure 1, and taking a larger solid angle (24 mrad) from the synchrotron onto the front end mirror than is typical. This arrangement means that the light illuminates the initial mirrors at a smaller grazing angle. This approach improved the illumination of the monochromator gratings and results in a substantially wider range of photon, energies, particularly at the higher photon energies, which reasonably can be used in experiment, without loss of resolution. In addition, the beamline focus matches the sample position of the sample target chamber. The current beamline configuration is equipped with a photoemission endstation with 50 mm hemispherical electron energy analyzer, set up for angle resolved photoemission [1].

The combined resolution of the beamline and photoemission endstation is limited, in the current geometry, by the endstation (the electron energy analyzer and the limited field

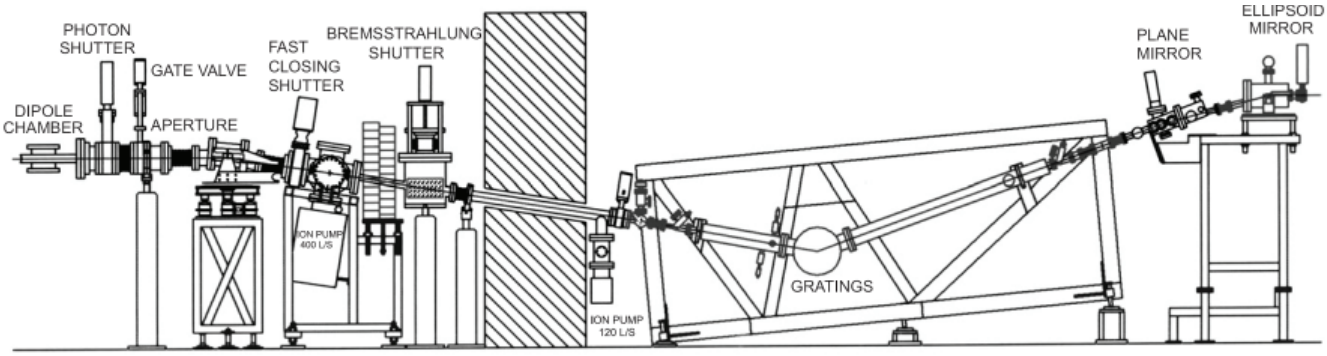

Figure 1. Layout of the 3 m TGM beamline at CAMD.

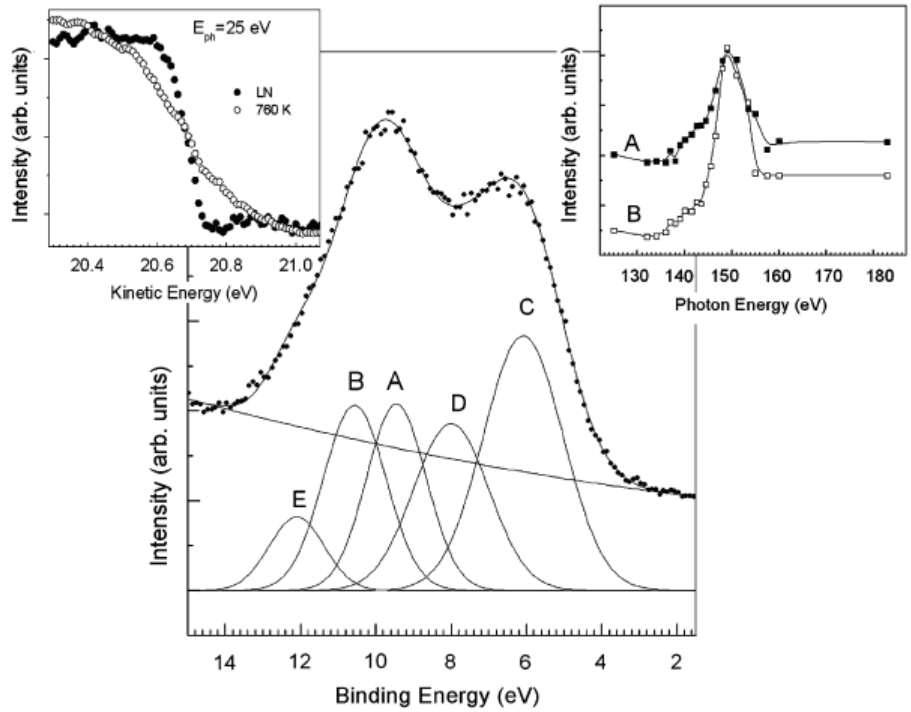

Figure 2. Photoemission in the region of the O 2p for an n-type HfO_2, with the resonant photoemission for Gd doped films of HfO_2 shown in the inset at the upper right. Tests of resolution at Fermi level for an Ag surface is shown at the upper left, for two sample temperatures (filled symbols for 80 K, open symbols for 760 K).

shielding of the end station) not the optics. The combined resolution is about 70 meV as indicated in the photoemission spectra (Figure 2).

The value of the current arrangement is demonstrated in studies of the valence band of HfO_2 with a 3% doping level of Gd. For such systems, the Gd states are normally difficult to observe, but evidence of the Gd 4f states can be enhanced in resonant photoemission. Given the normal "cut-off" of the 3 m TGM, this is usually done in the photon energy range above 140 eV by using second order light, but with the current geometry of the 3 m TGM, first order light use can be extended to photon energies up to about 180 eV. At these higher photon energies, the combined beamline/analyzer resolution is ~150 meV.

3. Results and discussion

In order to assist in the identification of the Gd 4f contributions to the O 2p feature of very lightly Gd doped HfO_2 (seen in Figure 2), we performed resonant photoemission (i.e. constant initial state spectroscopy) measurements. The Gd doped (3%) HfO_2 films were deposited on a single crystal silicon (1 0 0) p-type substrate using pulsed laser deposition (PLD). The Gd–HfO_2 target was prepared using HfO_2 and Gd_2O_3 powders, in a mixture of H_2 and Ar (8% H_2) to introduce the necessary oxygen vacancies to make the Gd doped HfO_2 film n-type (see Refs. [2] and [3] for additional details). The valence band photoemission spectra were taken through the 125–182 eV photon range at a 45° light incidence angle.

The photoelectron intensity, determined from the feature at about 9.5 eV binding energy (fitted by components A and B), is strongly enhanced at about 148 eV photon energy, as shown in the inset to Figure 2. It is clear that the resonant enhancements in the photoemission intensity, from this 9.5 eV binding energy initial state, occurs at photon energies corresponding to the binding energy of the Gd $4d_{3/2}$ (147 eV) shallow core. This is a super Coster–Kronig transition as the principal quantum number does not change, i.e. this is a $4d_{3/2} \rightarrow 4f_{5/2}$ excitation followed by decay and an Auger electron like emission [4] and [5]. The resonant photoemission process occurs because of an excitation from the 4d cores to a bound state, but with a final state identical to that resulting from direct photoemission from Gd 4f states [4] and [5].

Thus this feature at 9.5 eV binding energy has strong Gd weight, and is of Gd 4f character. Thus the Gd-4f binding energy appears to be at a binding energy of about 5.5 eV below the valence band maximum inside the O 2p envelope, but close to the bottom. This indicates that strong Gd 4f to O 2p hybridization likely occurs in this system, though the Gd 4f states are often treated as shallow cores.

Acknowledgments

The authors acknowledge insightful discussions with David Wisbey and Andre Petuhkov. This work was supported by the Office of Naval Research (Grant no. N00014-06-1-0616), the Defense Threat Reduction Agency (Grant no. HDTRA1-07-1-0008), and the Nebraska Research Initiative. The beamline was funded by the NSF through Grant CHE-9808022.

References

[1] P. A. Dowben, D. LaGraffe, and M. Onellion, *J. Phys.: Condens. Matter* **1** (1989), p. 6571.

[2] W. Wang, Y. Hong, M. Yu, B. Rout, G.A. Glass, and J. Tang, *J. Appl. Phys.* **99** (2006), p. 08M117.

[3] I. Ketsman, Ya.B. Losovyj, A. Sokolov, J. Tang, Z. Wang, K.D. Belashchenko, and P.A. Dowben, *Appl. Phys. A.* (2007) in press.

[4] P. A. Dowben *et al.*, *J. Vac. Sci. Technol. A* **13** (1995), p. 1549.

[5] T. Kachel *et al.*, *Phys. Rev. B* **45** (1992), p. 7276.