University of Nebraska - Lincoln
DigitalCommons@University of Nebraska - Lincoln

Nebraska Tractor Tests

Tractor Test and Power Museum, The Lester F. Larsen

1-1-1999

Tests 1912 & 1913: New Holland TL 70 Diesel

Follow this and additional works at: http://digitalcommons.unl.edu/tractormuseumlit

Part of the Applied Mechanics Commons

"Tests 1912 & 1913: New Holland TL 70 Diesel" (1999). *Nebraska Tractor Tests.* Paper 272.
http://digitalcommons.unl.edu/tractormuseumlit/272

This Article is brought to you for free and open access by the Tractor Test and Power Museum, The Lester F. Larsen at DigitalCommons@University of Nebraska - Lincoln. It has been accepted for inclusion in Nebraska Tractor Tests by an authorized administrator of DigitalCommons@University of Nebraska - Lincoln.

SUMMARY OF OECD TESTS 1912 and 1913—NEBRASKA SUMMARY 347
NEW HOLLAND TL 70 DIESEL
24 SPEED

POWER TAKE-OFF PERFORMANCE

Power HP *(kW)*	Crank shaft speed rpm	Gal/hr *(l/h)*	lb/hp.hr *(kg/kW.h)*	Hp.hr/gal *(kW.h/l)*	Mean Atmospheric Conditions
MAXIMUM POWER AND FUEL CONSUMPTION					
Rated Engine Speed (PTO speed 615 rpm)					
58.9 *(43.9)*	2504	3.66 *(13.85)*	0.436 *(0.265)*	16.09 *(3.17)*	
Standard Power Take-off speed (538 rpm)					
56.5 *(42.1)*	2190	3.37 *(12.75)*	0.418 *(0.254)*	16.80 *(3.31)*	
VARYING POWER AND FUEL CONSUMPTION					
58.9 *(43.9)*	2504	3.66 *(13.85)*	0.436 *(0.265)*	16.09 *(3.17)*	Air temperature
52.2 *(38.9)*	2618	3.39 *(12.83)*	0.455 *(0.277)*	15.38 *(3.03)*	73°F *(23°C)*
39.8 *(29.7)*	2667	2.77 *(10.48)*	0.487 *(0.296)*	14.42 *(2.84)*	Relative humidity
26.8 *(20.0)*	2675	2.19 *(8.30)*	0.572 *(0.348)*	12.23 *(2.41)*	75%
13.5 *(10.0)*	2695	1.68 *(6.35)*	0.871 *(0.530)*	8.02 *(1.58)*	Barometer
-- --	2732	1.23 *(4.65)*	-- --	-- --	29.4" Hg *(99.5 kPa)*

Maximum Torque -170.4 lb.-ft. *(231.1 Nm)* at 1144 rpm
Maximum Torque Rise -38.0%
Torque rise at 2000 engine rpm -14%

Location of Test: Istituto Per La Meccanizzazione Agricola (IMA) Strada delle Cacce, 73-10135 Torino, Italy

Dates of Test: April - December, 1999

Manufacturer: New Holland Italia S.p.A., Viale delle, Nazioni, 55- 41100, Modena, Italy and New Holland UK Limited, Cranes Farm Road Basildon, Essex ,United Kingdom

FUEL and OIL : Fuel No. 2 Diesel **Specific gravity converted to 60°/60° F *(15°/15°C)*** 0.842 **Fuel weight** 7.01 lbs/gal *(0.840 kg/l)* **Oil SAE** 15W40 **API service classification** CF-4 **Oil consumption for 10 hours** 0.02 lb *(9 gm)* **Transmission and hydraulic lubricant** Ambra Multi G **Front axle lubricant** Ambra Multi G

ENGINE: Make New Holland Diesel **Type** four cylinder vertical **Serial No.** 513-534080 **Crankshaft** lengthwise **Rated Engine speed** 2500 **Bore and stroke** 3.937" x 4.528" *(100 mm x 115 mm)* **Compression ratio** 16.5 to 1 **Displacement** 220 cu in *(3613 ml)* **Starting system** 12 volt **Lubrication** pressure **Air cleaner** two paper elements **Oil filter** one full flow cartridge **Oil cooler** engine coolant heat exchanger for crankcase oil, radiator for hydraulic and transmission oil **Fuel filter** one paper element **Muffler** vertical **Cooling medium temperature control** thermostat

CHASSIS: Type 2WD and front wheel assist **Serial No.** 001170191 **Tread width** rear 60.1" *(1526 mm)* to 84.2" *(2138 mm)* front: 2WD - 55.8" *(1417 mm)* to 84.7" *(2152 mm)*, FWA - 51.4" *(1305 mm)* to 79.3" *(2014 mm)* **Wheel base** 2WD - 92.2" *(2342 mm)* FWA - 91.1"*(2314 mm)* **Hydraulic control system** direct engine drive **Transmission** selective gear fixed ratio **Nominal travel speeds mph *(km/h)*** first 0.99 *(1.59)* second 1.12 *(1.81)* third 1.43 *(2.31)* fourth 1.62 *(2.63)* fifth 2.07 *(3.33)* sixth 2.30 *(3.71)* seventh 2.35 *(3.79)* eighth 2.62 *(4.22)* ninth 2.96 *(4.76)* tenth 3.35 *(5.39)* eleventh 3.37 *(5.42)* twelfth 3.81 *(6.14)* thirteenth 4.83 *(7.77)* fourteenth 5.42 *(8.73)* fifteenth 5.50 *(8.84)* sixteenth 6.17 *(9.94)* seventeenth 6.91 *(11.12)* eighteenth 7.87 *(12.67)* nineteenth 7.88 *(12.68)* twentieth 8.97 *(14.44)* twenty-first 11.36 *(18.28)* twenty-second 12.94 *(20.82)* twenty-third 16.27 *(26.19)* twenty-fourth 18.53 *(29.83)* reverse 1.13 *(1.82)*, 1.64 *(2.64)*, 2.37 *(3.81)*, 2.64 *(4.25)*, 3.39 *(5.46)*, 3.84 *(6.18)*, 5.53 *(8.90)*, 6.07 *(9.77)*, 7.92 *(12.75)*, 8.82 *(14.20)*, 12.72 *(20.47)*, 18.22 *(29.33)* **Clutch** dual dry disc operated by foot pedal **Brakes** wet disc hydraulically operated by two foot pedals which can be locked together **Steering** hydrostatic

DRAWBAR PERFORMANCE
BALLASTED - FRONT DRIVE ENGAGED
FUEL CONSUMPTION CHARACTERISTICS

Power Hp (kW)	Drawbar pull lbs (kN)	Speed mph (km/h)	Crank-shaft speed rpm	Slip %	Fuel Consumption lb/hp.hr (kg/kW.h)	Hp.hr/gal (kW.h/l)	Temp.°F (°C) cool-ing med	Air dry bulb	Barom. inch Hg (kPa)
75% of Pull at Maximum Power Five Hours 13th (3M Lo) Gear									
36.5 (27.3)	2810 (12.51)	4.87 (7.84)	2634	1.5	0.585 (0.356)	11.98 (2.36)	174 (79)	46 (8)	29.4 (99.5)
MAXIMUM POWER IN SELECTED GEARS									
5th (3S Lo) Gear									
41.4 (30.9)	9065 (40.32)	1.71 (2.76)	2508	15.0	0.614 (0.373)	11.42 (2.25)	174 (79)	46 (8)	29.4 (99.5)
6th (1M Lo) Gear									
44.4 (33.1)	8140 (36.20)	2.05 (3.29)	2500	8.9	0.566 (0.345)	12.38 (2.44)	179 (77)	46 (8)	29.4 (99.5)
7th (3S Hi) Gear									
44.4 (33.1)	7915 (35.22)	2.10 (3.38)	2500	8.3	0.566 (0.344)	12.39 (2.44)	178 (79)	46 (8)	29.4 (99.5)
8th(1M Hi) Gear									
45.6 (34.0)	7165 (31.88)	2.39 (3.84)	2500	6.3	0.551 (0.335)	12.71 (2.50)	176 (79)	46 (8)	29.4 (99.5)
9th (4S Lo) Gear									
45.7 (34.1)	6265 (27.86)	2.74 (4.41)	2500	4.9	0.555 (0.338)	12.62 (2.49)	176 (79)	46 (8)	29.4 (99.5)
10th (2M Lo) Gear									
46.0 (34.3)	5515 (24.53)	3.13 (5.04)	2500	4.1	0.549 (0.334)	12.78 (2.52)	174 (80)	46 (8)	29.4 (99.5)
11th (4S Hi) Gear									
46.0 (34.3)	5460 (24.28)	3.16 (5.09)	2500	3.9	0.550 (0.334)	12.76 (2.51)	174 (79)	46 (8)	29.4 (99.5)
12th (2M Hi) Gear									
46.4 (34.6)	4830 (21.48)	3.60 (5.80)	2500	3.5	0.542 (0.329)	12.94 (2.55)	179 (79)	46 (8)	29.4 (99.5)
13th (3M Lo) Gear									
45.8 (34.1)	3750 (16.68)	4.58 (7.37)	2500	2.4	0.552 (0.336)	12.69 (2.50)	178 (80)	46 (8)	29.4 (99.5)
14th (1F Lo) Gear									
47.2 (35.2)	3420 (15.21)	5.18 (8.34)	2500	2.2	0.529 (0.322)	13.25 (2.61)	176 (79)	46 (8)	29.4 (99.5)
15th (3M Hi) Gear									
45.5 (33.9)	3240 (14.42)	5.26 (8.47)	2500	2.0	0.550 (0.334)	12.76 (2.51)	176 (79)	46 (8)	29.4 (99.5)
16th (1F Hi) Gear									
46.0 (34.3)	2910 (12.95)	5.92 (9.53)	2500	1.7	0.542 (0.330)	12.93 (2.55)	174 (79)	46 (8)	29.4 (99.5)
17th (4M Lo) Gear									
44.3 (33.0)	2495 (11.09)	6.66 (10.72)	2500	1.4	0.568 (0.346)	12.33 (2.43)	179 (79)	46 (8)	29.4 (99.5)
18th (2F Lo) Gear									
44.2 (32.9)	2195 (9.76)	7.55 (12.15)	2500	1.2	0.568 (0.345)	12.34 (2.43)	178 (79)	46 (8)	29.4 (99.5)
19th(4M Hi) Gear									
42.8 (31.9)	2130 (9.47)	7.54 (12.15)	2500	1.1	0.579 (0.352)	12.10 (2.38)	176 (79)	46 (8)	29.4 (99.5)
20th (2F Hi) Gear									
42.2 (31.5)	1830 (8.14)	8.65 (13.92)	2500	1.0	0.589 (0.358)	11.90 (2.34)	176 (79)	46 (8)	29.4 (99.5)

TL 70- FWA

TIRES, BALLAST AND WEIGHT		With Ballast	Without Ballast
Rear Tires	-No., size, ply & psi *(kPa)*	Two 480/70R30; **;13 *(90)*	Two 480/70R30; **;13 *(90)*
Ballast	-Liquid (total)	None	None
	- Cast Iron (total)	440 lb *(200 kg)*	None
Front Tires	-No., size, ply & psi *(kPa)*	Two 320/70R24; **;23 *(160)*	Two 320/70R24; **;23 *(160)*
Ballast	-Liquid (total)	None	None
	- Cast Iron (total)	1050 lb *(475 kg)*	None
Height of Drawbar		16.9 in *(430 mm)*	16.5 in *(420 mm)*
Static Weight with Operator	- Rear	5425 lb *(2460 kg)*	4985 lb *(2260 kg)*
	-Front	4475 lb *(2030 kg)*	3425 lb *(1555 kg)*
	-Total	9900 lb *(4490 kg)*	8410 lb *(3815 kg)*

Power take-off 540 rpm at 2199 engine rpm or 1000 rpm at 2381 engine rpm **Unladen tractor mass** 2WD - 7660 lb *(3475 kg)*, FWA - 8245 lb *(3740 kg)*

REPAIRS AND ADJUSTMENTS: No repairs or adjustments

REMARKS: All test results were determined from observed data obtained in accordance with official OECD test procedures. The performance results on this summary were taken from OECD tests conducted under the Code I Test procedure.

We, the undersigned, certify that this is a true summary of data from OECD Reports No. **1912** and **1913,** Nebraska Summary 347, January 10, 2001.

Brent T. Sampson
Test Engineer

L.L. Bashford
M.F. Kocher
R.D. Grisso, Jr.
Board of Tractor Test Engineers

DRAWBAR PERFORMANCE

BALLASTED - 2WD

FUEL CONSUMPTION CHARACTERISTICS

Power Hp *(kW)*	Drawbar pull lbs *(kN)*	Speed mph *(km/h)*	Crank-shaft speed rpm	Slip %	Fuel Consumption lb/hp.hr *(kg/kW.h)*	Hp.hr/gal *(kW.h/l)*	Temp.°F cool-ing med	(°C) Air dry bulb	Barom. inch Hg *(kPa)*
75% of Pull at Maximum Power Five Hours 13th (3M Lo) Gear									
36.6	2800	4.90	2640	2.5	0.598	11.73	174	54	29.4
(27.3)	*(12.46)*	*(7.88)*			*(0.364)*	*(2.31)*	*(79)*	*(12)*	*(99.5)*
MAXIMUM POWER IN SELECTED GEARS									
7th (3S Hi) Gear									
38.9	7080	2.06	2615	15.1	0.634	11.06	174	54	29.4
(29.0)	*(31.49)*	*(3.32)*			*(0.386)*	*(2.18)*	*(79)*	*(12)*	*(99.5)*
8th(1M Hi) Gear									
42.0	7080	2.22	2500	14.2	0.600	11.67	174	54	29.4
(31.3)	*(31.49)*	*(3.57)*			*(0.365)*	*(2.30)*	*(79)*	*(12)*	*(99.5)*
9th (4S Lo) Gear									
45.1	6240	2.71	2500	7.7	0.559	12.54	168	54	29.4
(33.6)	*(27.76)*	*(4.36)*			*(0.340)*	*(2.47)*	*(76)*	*(12)*	*(99.5)*
10th (2M Lo) Gear									
45.5	5490	3.11	2500	6.1	0.550	12.74	175	54	29.4
(33.9)	*(24.43)*	*(5.00)*			*(0.335)*	*(2.51)*	*(79)*	*(12)*	*(99.5)*
11th (4S Hi) Gear									
44.7	5335	3.14	2500	5.7	0.559	12.54	175	54	29.4
(33.3)	*(23.74)*	*(5.05)*			*(0.340)*	*(2.47)*	*(79)*	*(12)*	*(99.5)*
12th (2M Hi) Gear									
45.3	4765	3.57	2500	4.8	0.542	12.94	175	54	29.4
(33.8)	*(21.19)*	*(5.74)*			*(0.329)*	*(2.55)*	*(79)*	*(12)*	*(99.5)*
13th (3M Lo) Gear									
45.5	3730	4.57	2500	3.5	0.549	12.78	175	54	29.4
(33.9)	*(16.58)*	*(7.36)*			*(0.334)*	*(2.52)*	*(79)*	*(12)*	*(99.5)*
14th (1F Lo) Gear									
45.9	3310	5.20	2500	3.3	0.550	12.74	174	54	29.4
(34.2)	*(14.72)*	*(8.37)*			*(0.335)*	*(2.51)*	*(79)*	*(12)*	*(99.5)*
15th (3M Hi) Gear									
44.9	3220	5.23	2500	3.1	0.552	12.70	174	54	29.4
(33.5)	*(14.32)*	*(8.42)*			*(0.336)*	*(2.50)*	*(79)*	*(12)*	*(99.5)*
16th (1F Hi) Gear									
44.8	2845	5.91	2500	2.6	0.554	12.69	174	54	29.4
(33.4)	*(12.65)*	*(9.51)*			*(0.337)*	*(2.50)*	*(79)*	*(12)*	*(99.5)*
17th (4M Lo) Gear									
43.4	2425	6.71	2500	2.1	0.582	12.05	174	54	29.4
(32.4)	*(10.79)*	*(10.80)*			*(0.354)*	*(2.37)*	*(79)*	*(12)*	*(99.5)*
18th (2F Lo) Gear									
43.1	2115	7.65	2500	1.7	0.590	11.88	173	54	29.4
(32.2)	*(9.42)*	*(12.31)*			*(0.359)*	*(2.34)*	*(78)*	*(12)*	*(99.5)*
19th (4M Hi) Gear									
42.0	2050	7.69	2500	1.6	0.607	11.54	174	54	29.4
(31.3)	*(9.12)*	*(12.37)*			*(0.369)*	*(2.27)*	*(79)*	*(12)*	*(99.5)*
20th (4F Hi) Gear									
40.4	1720	8.81	2500	1.4	0.635	11.03	174	54	29.4
(30.1)	*(7.65)*	*(14.17)*			*(0.386)*	*(2.17)*	*(79)*	*(12)*	*(99.5)*

TL 70-2WD

TIRES, BALLAST AND WEIGHT		With Ballast	Without Ballast
Rear Tires	-No., size, ply & psi *(kPa)*	Two 480/70R30;**;13 *(90)*	Two 480/70R30;**;13 *(90)*
Ballast	-Liquid (total)	None	None
	-Cast Iron (total)	440 lb *(200 kg)*	None
Front Tires	-No., size, ply & psi *(kPa)*	Two 7.50-16;8;36 *(250)*	Two 7.50-16; 8;36 *(250)*
Ballast	-Liquid (total)	None	None
	-Cast Iron (total)	1050 lb *(475 kg)*	None
Height of Drawbar		29.1 in *(740 mm)*	29.5 in *(750 mm)*
Static Weight with Operator	- Rear	5590 lb *(2535 kg)*	5150 lb *(2335 kg)*
	- Front	3725 lb *(1690 kg)*	2675 lb *(1215 kg)*
	-Total	9315 lb *(4225 kg)*	7825 lb *(3550 kg)*

TRACTOR SOUND LEVEL WITH CAB	FWA dB(A)	2WD dB(A)
At no load in 13th (3M Lo) gear	78.0	78.0
Bystander in 24th (4F Hi) gear	84.9	86.8

CENTER OF GRAVITY - 2WD

Horizontal distance forward from centerline of rear wheels	31.5" *(800 mm)*
Vertical distance above roadway	29.9" *(760 mm)*
Horizontal distance from center of rear wheel tread	0.2" *(5 mm)* to the left

CENTER OF GRAVITY - FWA

Horizontal distance forward from centerline of rear wheels	37.2" *(945 mm)*
Vertical distance above roadway	29.5" *(750 mm)*
Horizontal distance from center of rear wheel tread	0.4" *(9 mm)* to the left

TURNING ON A CONCRETE SURFACE (2WD)

Turning radius with brake applied right 138" *(3.50 m)* left 138" *(3.50 m)*
without brake right 152" *(3.85 m)* left 150" *(3.80 m)*
Turning space radius with brake applied right 144" *(3.65 m)* left 142" *(3.60 m)*
without brake right 156" *(3.95 m)* left 150" *(3.80 m)*

TURNING ON A CONCRETE SURFACE (FWA)

Turning radius with brake applied right 179" *(4.55 m)* left 173" *(4.40 m)*
without brake right 224" *(5.70 m)* left 217" *(5.50 m)*
Turning space radius with brake applied right 185" *(4.70 m)* left 179" *(4.55 m)*
without brake right 228" *(5.80 m)* left 222" *(5.65 m)*

THREE POINT HITCH PERFORMANCE (OECD Static Test)

CATEGORY: II
Quick Attach: None

Maximum Force Exerted Through Whole Range:	3275 lbs	*(14.6 kN)*
i) Opening pressure of relief valve:	NA	
Sustained pressure with relief valve open:	2900 psi	*(200 bar)*
ii) Pump delivery rate at minimum pressure:	14.8 GPM	*(56.0 l/min)*
iii) Pump delivery rate at maximum hydraulic power:	10.6 GPM	*(40.2 l/min)*
Delivery pressure:	2525 psi	*(174 bar)*
Power:	15.6 HP	*(11.6 kW)*

	SAE TEST inch	SAE TEST *mm*	OECD TEST inch	OECD TEST *mm*
A	27.0	*686*	27.8	*705*
B	10.0	*255*	10.0	*255*
C	13.0	*329*	13.0	*329*
D	11.8	*300*	11.8	*300*
E	13.2	*335*	10.0	*255*
F	8.1	*205*	8.1	*205*
G	29.3	*745*	27.4	*695*
H	0.6	*15*	0.6	*15*
I	15.7	*400*	15.7	*400*
J	21.2	*540*	19.3	*490*
K	21.2	*540*	18.3	*465*
L	43.3	*1100*	43.3	*1100*
M	21.7	*550*	21.7	*550*
N	38.0	*965*	38.0	*965*
O	8.0	*203*	7.9	*200*
P	40.2	*1021*	43.3	*1100*
Q	34.2	*870*	35.0	*890*
R	25.8	*654*	22.4	*570*

HITCH DIMENSIONS AS TESTED NO LOAD

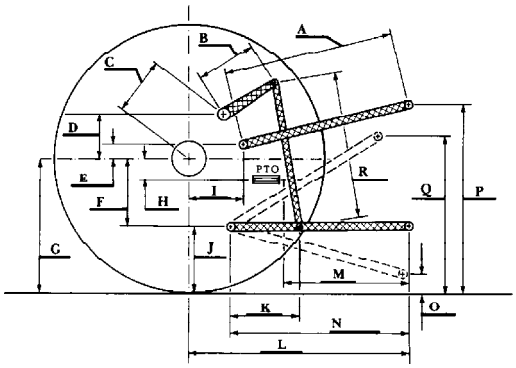

THREE POINT HITCH PERFORMANCE(SAE Static Test)

Observed Maximum Pressure psi. *(bar)*	2970 *(205)*
Location:	hydraulic pump
Hydraulic oil temperature: °F *(°C)*	144 *(62)*
Location:	hydraulic sump
Category:	II
Quick attach:	none

System pressure 2675 psi *(184 Bar)*

Hitch point distance to ground level in. *(mm)*	8.0 *(203)*	15.0 *(381)*	22.0 *(559)*	29.0 *(737)*	36.0 *(914)*
Lift force on frame lb	8442	7817	7371	7313	6597
" " " " " " *(kN)*	*(37.5)*	*(34.8)*	*(32.8)*	*(32.5)*	*(29.3)*

Agricultural Research Division
Institute of Agriculture and Natural Resources
University of Nebraska Lincoln
Darrell Nelson, Dean and Director