University of Nebraska - Lincoln
DigitalCommons@University of Nebraska - Lincoln

Nebraska Tractor Tests

Tractor Test and Power Museum, The Lester F. Larsen

1-1-1999

Tests 1908 & 1916: New Holland TL 100 Diesel

Follow this and additional works at: http://digitalcommons.unl.edu/tractormuseumlit

Part of the Applied Mechanics Commons

"Tests 1908 & 1916: New Holland TL 100 Diesel" (1999). *Nebraska Tractor Tests.* Paper 278.
http://digitalcommons.unl.edu/tractormuseumlit/278

This Article is brought to you for free and open access by the Tractor Test and Power Museum, The Lester F. Larsen at DigitalCommons@University of Nebraska - Lincoln. It has been accepted for inclusion in Nebraska Tractor Tests by an authorized administrator of DigitalCommons@University of Nebraska - Lincoln.

SUMMARY OF OECD TESTS 1908 and 1916—NEBRASKA SUMMARY 350
NEW HOLLAND TL 100 DIESEL
24 SPEED

POWER TAKE-OFF PERFORMANCE

Power HP *(kW)*	Crank shaft speed rpm	Gal/hr *(l/h)*	lb/hp.hr *(kg/kW.h)*	Hp.hr/gal *(kW.h/l)*	Mean Atmospheric Conditions
MAXIMUM POWER AND FUEL CONSUMPTION					
Rated Engine Speed (PTO speed 1048 rpm)					
83.1 *(62.0)*	2495	4.98 *(18.85)*	0.419 *(0.255)*	16.70 *(3.29)*	
Standard Power Take-off speed (1000 rpm)					
81.9 *(61.1)*	2381	4.79 *(18.13)*	0.409 *(0.249)*	17.11 *(3.37)*	
VARYING POWER AND FUEL CONSUMPTION					
83.1 *(62.0)*	2495	4.98 *(18.85)*	0.419 *(0.255)*	16.70 *(3.29)*	Air temperature
74.7 *(55.7)*	2679	4.82 *(18.24)*	0.452 *(0.275)*	15.53 *(3.06)*	64°F *(18°C)*
57.0 *(42.5)*	2698	3.87 *(14.65)*	0.477 *(0.290)*	14.72 *(2.90)*	Relative humidity
38.7 *(28.9)*	2721	2.99 *(11.33)*	0.542 *(0.330)*	12.94 *(2.55)*	65%
19.8 *(14.7)*	2745	2.21 *(8.38)*	0.786 *(0.478)*	8.93 *(1.76)*	Barometer
-- --	2769	1.42 *(5.36)*	-- --	-- --	29.3" Hg *(99.3 kPa)*

Maximum Torque -244.7 lb.-ft. *(331.8 Nm)* at 1550 rpm
Maximum Torque Rise -39.8%
Torque rise at 2000 engine rpm -19%

Location of Test: Istituto Per La Meccanizzazione Agricola (IMA) Strada delle Cacce, 73-10135 Torino, Italy

Dates of Test: August - December, 1999

Manufacturer: New Holland Italia S.p.A., Viale delle, Nazioni, 55- 41100, Modena, Italy and New Holland UK Limited, Cranes Farm Road Basildon, Essex ,United Kingdom

FUEL and OIL: Fuel No. 2 Diesel **Specific gravity converted to 60°/60° F *(15°/15°C)*** 0.842 **Fuel weight** 7.01 lbs/gal *(0.840 kg/l)* **Oil SAE** 15W40 **API service classification** CF-4 **Oil consumption for 10 hours** 0.02 lb *(10 gm)* **Transmission and hydraulic lubricant** Ambra Multi G **Front axle lubricant** Ambra Multi G

ENGINE: Make New Holland Diesel **Type** four cylinder vertical with turbocharger **Serial No.** 513-541141 **Crankshaft** lengthwise **Rated Engine speed** 2500 **Bore and stroke** 4.094" x 4.528" *(104 mm x 115 mm)* **Compression ratio** 16.5 to 1 **Displacement** 238 cu in *(3908 ml)* **Starting system** 12 volt **Lubrication** pressure **Air cleaner** two paper elements **Oil filter** one full flow cartridge **Oil cooler** engine coolant heat exchanger for crankcase oil, radiator for hydraulic and transmission oil **Fuel filter** one paper element **Muffler** vertical **Cooling medium temperature control** thermostat

CHASSIS: Type 2WD and front wheel assist **Serial No.** 001157966 **Tread width** rear 60.2" *(1530 mm)* to 83.9" *(2130 mm)* front: 2WD - 55.6" *(1413 mm)* to 84.5" *(2146 mm)*, FWA - 51.4" *(1305 mm)* to 79.3" *(2014 mm)* **Wheel base** 2WD - 92.2" *(2342 mm)* FWA - 91.1"*(2314 mm)* **Hydraulic control system** direct engine drive **Transmission** selective gear fixed ratio **Nominal travel speeds mph *(km/h)*** first 0.98 *(1.58)* second 1.12 *(1.80)* third 1.43 *(2.30)* fourth 1.62 *(2.61)* fifth 2.06 *(3.31)* sixth 2.29 *(3.69)* seventh 2.34 *(3.77)* eighth 2.61*(4.20)* ninth 2.95 *(4.74)* tenth 3.33 *(5.36)* eleventh 3.35 *(5.40)* twelfth 3.79 *(6.11)* thirteenth 4.80 *(7.73)* fourteenth 5.40 *(8.69)* fifteenth 5.47 *(8.80)* sixteenth 6.15 *(9.89)* seventeenth 6.88 *(11.07)* eighteenth 7.83 *(12.60)* nineteenth 7.84 *(12.62)* twentieth 8.93 *(14.38)* twenty-first 11.31*(18.20)* twenty-second 12.88 *(20.73)* twenty-third 16.20 *(26.07)* twenty-fourth 18.45 *(29.69)* reverse 1.10 *(1.77)*, 1.60 *(2.57)*, 2.30*(3.71)*, 2.57 *(4.13)*, 3.30 *(5.31)*, 3.73 *(6.00)*, 5.38 *(8.66)*, 6.04 *(9.73)*, 7.70 *(12.40)*, 8.79 *(14.14)*,12.66 *(20.38)*, 18.14 *(29.19)* **Clutch** dual dry disc operated by foot pedal **Brakes** wet disc hydraulically operated by two foot pedals which can be locked together **Steering** hydrostatic

DRAWBAR PERFORMANCE
BALLASTED - FRONT DRIVE ENGAGED
FUEL CONSUMPTION CHARACTERISTICS

Power Hp (kW)	Drawbar pull lbs (kN)	Speed mph (km/h)	Crank-shaft speed rpm	Slip %	Fuel Consumption lb/hp.hr (kg/kW.h)	Fuel Consumption Hp.hr/gal (kW.h/l)	Temp.°F (°C) cool-ing med	Air dry bulb	Barom. inch Hg (kPa)
75% of Pull at Maximum Power Five Hours 13th (3M Lo) Gear									
55.8	4145	5.05	2700	3.7	0.574	12.23	185	68	28.9
(41.6)	*(18.44)*	*(8.13)*			*(0.349)*	*(2.41)*	*(85)*	*(20)*	*(98.0)*
MAXIMUM POWER IN SELECTED GEARS									
8th(1M Hi) Gear									
59.9	9525	2.36	2636	15.0	0.598	11.73	200	66	29.5
(44.7)	*(42.38)*	*(3.80)*			*(0.364)*	*(2.31)*	*(93)*	*(19)*	*(100.0)*
9th (4S Lo) Gear									
62.8	8910	2.64	2500	11.3	0.559	12.54	199	66	29.5
(46.8)	*(39.63)*	*(4.25)*			*(0.340)*	*(2.47)*	*(93)*	*(19)*	*(100.0)*
10th(2M Lo)Gear									
66.0	8005	3.09	2500	7.7	0.534	13.10	197	66	29.5
(49.2)	*(35.61)*	*(4.98)*			*(0.325)*	*(2.58)*	*(92)*	*(19)*	*(100.0)*
11th (4S Hi) Gear									
65.6	7830	3.14	2500	7.4	0.539	12.99	197	66	29.5
(48.9)	*(34.83)*	*(5.06)*			*(0.328)*	*(2.56)*	*(92)*	*(19)*	*(100.0)*
12th (2M Hi) Gear									
66.2	6910	3.59	2500	6.2	0.536	13.10	194	66	29.5
(49.4)	*(30.75)*	*(5.78)*			*(0.326)*	*(2.58)*	*(90)*	*(19)*	*(100.0)*
13th (3MLo) Gear									
67.6	5525	4.59	2500	5.0	0.521	13.45	192	66	29.5
(50.4)	*(24.57)*	*(7.38)*			*(0.317)*	*(2.65)*	*(89)*	*(19)*	*(100.0)*
14th (1F Lo) Gear									
68.4	4930	5.20	2500	4.6	0.524	13.35	192	66	29.5
(51.0)	*(21.93)*	*(8.37)*			*(0.319)*	*(2.63)*	*(89)*	*(19)*	*(100.0)*
15th(3M Hi)Gear									
66.8	4740	5.28	2500	4.5	0.538	13.05	192	66	29.5
(49.8)	*(21.09)*	*(8.50)*			*(0.327)*	*(2.57)*	*(89)*	*(19)*	*(100.0)*
16th (1F Hi) Gear									
68.2	4275	5.98	2500	3.8	0.529	13.25	192	66	29.5
(50.8)	*(19.03)*	*(9.62)*			*(0.322)*	*(2.61)*	*(89)*	*(19)*	*(100.0)*
17th (4M Lo) Gear									
68.1	3825	6.67	2500	3.6	0.529	13.25	188	66	29.5
(50.8)	*(17.02)*	*(10.74)*			*(0.322)*	*(2.61)*	*(87)*	*(19)*	*(100.0)*
18th (2F Lo) Gear									
68.5	3350	7.67	2500	3.4	0.526	13.30	185	66	29.5
(51.1)	*(14.91)*	*(12.34)*			*(0.320)*	*(2.62)*	*(85)*	*(19)*	*(100.0)*
19th (4MHi) Gear									
67.5	3310	7.64	2500	3.3	0.539	12.99	180	66	29.5
(50.3)	*(14.72)*	*(12.30)*			*(0.328)*	*(2.56)*	*(82)*	*(19)*	*(100.0)*
20th (2F Hi) Gear									
66.1	2825	8.78	2500	3.1	0.542	12.94	191	66	29.5
(49.3)	*(12.56)*	*(14.13)*			*(0.330)*	*(2.55)*	*(88)*	*(19)*	*(100.0)*

Power take-off 540 rpm at 2199 engine rpm or 1000 rpm at 2381 engine rpm **Unladen tractor mass** 2WD - 8135 lb *(3690 kg)*, FWA - 8795 lb *(3990 kg)*

REPAIRS AND ADJUSTMENTS: No repairs or adjustments

REMARKS: All test results were determined from observed data obtained in accordance with official OECD test procedures. The performance results on this summary were taken from OECD tests conducted under the Code I Test procedure.

We, the undersigned, certify that this is a true summary of data from OECD Reports No. **1908** and **1916,** Nebraska Summary 350, January10, 2001.

Brent T. Sampson
Test Engineer

L.L. Bashford
M.F. Kocher
R.D. Grisso,Jr.
Board of Tractor Test Engineers

TL 100- FWA

TIRES, BALLAST AND WEIGHT		With Ballast	Without Ballast
Rear Tires	-No., size, ply & psi *(kPa)*	Two 480/70R34; **;13 *(90)*	Two 480/70R34; **;13 *(90)*
Ballast	-Liquid (total)	None	None
	-Cast Iron (total)	440 lb *(200 kg)*	None
Front Tires	-No., size, ply & psi *(kPa)*	Two 380/70R24; **;23 *(160)*	Two 380/70R24; **;23 *(160)*
Ballast	-Liquid (total)	None	None
	-Cast Iron (total)	1050 lb *(475 kg)*	None
Height of Drawbar		19.7 in *(500 mm)*	19.7 in *(500 mm)*
Static Weight with Operator	- Rear	5755 lb *(2610 kg)*	5315 lb *(2410 kg)*
	- Front	4695 lb *(2130 kg)*	3645 lb *(1655 kg)*
	-Total	10450 lb *(4740 kg)*	8960 lb *(4065 kg)*

DRAWBAR PERFORMANCE

BALLASTED - 2WD

FUEL CONSUMPTION CHARACTERISTICS

Power Hp *(kW)*	Drawbar pull lbs *(kN)*	Speed mph *(km/h)*	Crank-shaft speed rpm	Slip %	Fuel Consumption lb/hp.hr *(kg/kW.h)*	Fuel Consumption Hp.hr/gal *(kW.h/l)*	Temp.°F cool-ing med	(°C) Air dry bulb	Barom. inch Hg *(kPa)*
75% of Pull at Maximum Power Five Hours 13th (3M Lo) Gear									
57.4 *(42.8)*	4325 *(19.23)*	4.98 *(8.01)*	2715	4.3	0.572 *(0.348)*	12.23 *(2.41)*	192 *(89)*	61 *(16)*	28.9 *(98.0)*
MAXIMUM POWER IN SELECTED GEARS									
11th (4S Hi) Gear									
58.1 *(43.3)*	7165 *(31.88)*	3.04 *(4.89)*	2667	15.0	0.616 *(0.375)*	11.37 *(2.24)*	199 *(93)*	68 *(20)*	28.9 *(98.0)*
12th (2M Hi)Gear									
62.9 *(46.9)*	7110 *(31.64)*	3.32 *(5.34)*	2500	12.3	0.574 *(0.349)*	12.18 *(2.40)*	194 *(90)*	68 *(20)*	28.9 *(98.0)*
13th (3M Lo) Gear									
69.9 *(52.1)*	5790 *(25.75)*	4.53 *(7.29)*	2500	5.8	0.515 *(0.313)*	13.65 *(2.69)*	194 *(90)*	68 *(20)*	28.9 *(98.0)*
14th (1F Lo) Gear									
70.9 *(52.9)*	5180 *(23.05)*	5.13 *(8.26)*	2500	5.2	0.508 *(0.309)*	13.81 *(2.72)*	193 *(89)*	68 *(20)*	28.9 *(98.0)*
15th (3M Hi)Gear									
69.2 *(51.6)*	5030 *(22.37)*	5.16 *(8.30)*	2500	5.1	0.523 *(0.318)*	13.40 *(2.64)*	193 *(89)*	68 *(20)*	28.9 *(98.0)*
16th (1F Hi) Gear									
71.5 *(53.3)*	4565 *(20.31)*	5.87 *(9.45)*	2500	4.6	0.503 *(0.306)*	13.91 *(2.74)*	191 *(88)*	68 *(20)*	28.9 *(98.0)*
17th (4M Lo)Gear									
70.3 *(52.4)*	3995 *(17.76)*	6.60 *(10.62)*	2500	4.0	0.515 *(0.313)*	13.60 *(2.68)*	188 *(87)*	68 *(20)*	28.9 *(98.0)*
18th (2F Lo) Gear									
70.4 *(52.5)*	3495 *(15.55)*	7.56 *(12.16)*	2500	3.6	0.518 *(0.315)*	13.55 *(2.67)*	184 *(84)*	68 *(20)*	28.9 *(98.0)*
19th (4M Hi) Gear									
68.5 *(51.1)*	3400 *(15.11)*	7.56 *(12.17)*	2500	3.7	0.538 *(0.327)*	13.05 *(2.57)*	182 *(83)*	68 *(20)*	28.9 *(98.0)*
20th (4F Hi)Gear									
71.2 *(53.1)*	3065 *(13.64)*	8.71 *(14.01)*	2500	3.3	0.518 *(0.315)*	13.55 *(2.67)*	184 *(85)*	68 *(20)*	28.9 *(98.0)*

TL 100-2WD

TIRES, BALLAST AND WEIGHT		**With Ballast**	**Without Ballast**
Rear Tires	-No., size, ply & psi *(kPa)*	Two 480/70R34;**;13 *(90)*	Two 480/70R34;**;13 *(90)*
Ballast	-Liquid (total)	None	None
	-Cast Iron (total)	440 lb *(200 kg)*	None
Front Tires	-No., size, ply & psi *(kPa)*	Two 7.50-20;8;36 *(250)*	Two 7.50-20; 8;36 *(250)*
Ballast	-Liquid (total)	None	None
	-Cast Iron (total)	1050 lb *(475 kg)*	None
Height of Drawbar		27.6 in *(700 mm)*	28.0 in *(710 mm)*
Static Weight with Operator	- Rear	5600 lb *(2540 kg)*	5160 lb *(2340 kg)*
	-Front	4190 lb *(1900 kg)*	3140 lb *(1425 kg)*
	-Total	9790 lb *(4440 kg)*	8300 lb *(3765 kg)*

TRACTOR SOUND LEVEL WITH CAB	FWA dB(A)	2WD dB(A)
At no load in 15th (3M Hi) gear	77.6	77.6
Bystander in 24th (4F Hi) gear	84.9	86.8

CENTER OF GRAVITY - 2WD

Horizontal distance forward from centerline of rear wheels	35.0" *(890 mm)*
Vertical distance above roadway	34.3" *(870 mm)*
Horizontal distance from center of rear wheel tread	0.3" *(7 mm)* to the left

CENTER OF GRAVITY - FWA

Horizontal distance forward from centerline of rear wheels	37.2" *(945 mm)*
Vertical distance above roadway	33.5" *(850 mm)*
Horizontal distance from center of rear wheel tread	0.5" *(12 mm)* to the left

TURNING ON A CONCRETE SURFACE (2WD)

Turning radius with brake applied right 138" *(3.50 m)* left 138" *(3.50 m)*
without brake right 152" *(3.85 m)* left 150" *(3.80 m)*
Turning space radius with brake applied right 144" *(3.65 m)* left 142" *(3.60 m)*
without brake right 154" *(3.90 m)* left 150" *(3.80 m)*

TURNING ON A CONCRETE SURFACE (FWA)

Turning radius with brake applied right 181" *(4.60 m)* left 177" *(4.50 m)*
without brake right 224" *(5.70 m)* left 219" *(5.55 m)*
Turning space radius with brake applied right 185" *(4.70 m)* left 181" *(4.60 m)*
without brake right 228" *(5.80 m)* left 224" *(5.70 m)*

THREE POINT HITCH PERFORMANCE (OECD Static Test)

CATEGORY: II		
Quick Attach: None		
Maximum Force Exerted Through Whole Range:	6185 lbs	*(27.5 kN)*
i) Opening pressure of relief valve:	NA	
Sustained pressure with relief valve open:	2900 psi	*(200 bar)*
ii) Pump delivery rate at minimum pressure:	14.6 GPM	*(55.4 l/min)*
iii) Pump delivery rate at maximum		
hydraulic power:	10.0 GPM	*(37.9 l/min)*
Delivery pressure:	2320 psi	*(160 bar)*
Power:	13.5 HP	*(10.1 kW)*

THREE POINT HITCH PERFORMANCE(SAE Static Test)

Observed Maximum Pressure psi. *(bar)*	2970 *(205)*
Location:	hydraulic pump
Hydraulic oil temperature: °F *(°C)*	144 *(62)*
Location:	hydraulic sump
Category:	II
Quick attach:	none

System pressure 2675 psi *(184 Bar)*

Hitch point distance to ground level in. *(mm)*	8.0 *(203)*	15.0 *(381)*	22.0 *(559)*	29.0 *(737)*	36.0 *(914)*
Lift force on frame lb	11006	9783	8937	9009	7961
" " " " " " *(kN)*	*(49.4)*	*(43.5)*	*(39.8)*	*(40.5)*	*(35.4)*

	SAE TEST		OECD TEST	
	inch	*mm*	inch	*mm*
A	27.0	*686*	27.8	*705*
B	10.0	*255*	10.0	*255*
C	13.0	*329*	13.0	*329*
D	11.8	*300*	11.8	*300*
E	13.2	*335*	10.0	*255*
F	8.1	*205*	8.1	*205*
G	29.3	*745*	30.3	*770*
H	0.6	*15*	0.6	*15*
I	15.7	*400*	15.7	*400*
J	21.2	*540*	22.2	*565*
K	21.2	*540*	18.3	*465*
L	43.3	*1100*	43.3	*1100*
M	21.7	*550*	21.7	*550*
N	38.0	*965*	38.0	*965*
O	8.0	*203*	7.9	*200*
P	40.2	*1021*	46.3	*1175*
Q	34.2	*870*	36.2	*920*
R	25.8	*654*	24.4	*620*

HITCH DIMENSIONS AS TESTED NO LOAD

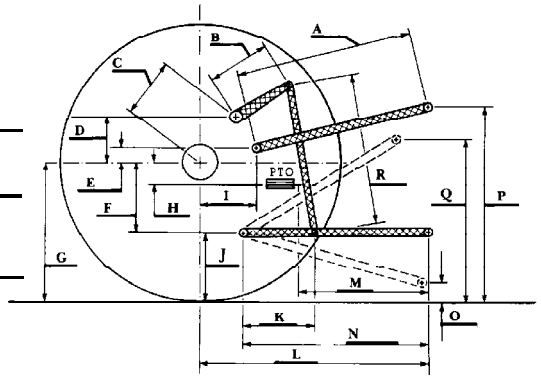

Agricultural Research Division
Institute of Agriculture and Natural Resources
University of Nebraska Lincoln
Darrell Nelson, Dean and Director