University of Nebraska - Lincoln
DigitalCommons@University of Nebraska - Lincoln

Nebraska Tractor Tests

Tractor Test and Power Museum, The Lester F. Larsen

1-1-1999

Tests 1902 & 1903: New Holland TN 65D/New Holland TN 65S Diesel

Follow this and additional works at: http://digitalcommons.unl.edu/tractormuseumlit

Part of the Applied Mechanics Commons

"Tests 1902 & 1903: New Holland TN 65D/New Holland TN 65S Diesel" (1999). *Nebraska Tractor Tests.* Paper 291.
http://digitalcommons.unl.edu/tractormuseumlit/291

This Article is brought to you for free and open access by the Tractor Test and Power Museum, The Lester F. Larsen at DigitalCommons@University of Nebraska - Lincoln. It has been accepted for inclusion in Nebraska Tractor Tests by an authorized administrator of DigitalCommons@University of Nebraska - Lincoln.

SUMMARY OF OECD TESTS 1902 and 1903—NEBRASKA SUMMARY 331
NEW HOLLAND TN 65D DIESEL
ALSO NEW HOLLAND TN 65S DIESEL
8 SPEED

POWER TAKE-OFF PERFORMANCE

Power HP *(kW)*	Crank shaft speed rpm	Gal/hr *(l/h)*	lb/hp.hr *(kg/kW.h)*	Hp.hr/gal *(kW.h/l)*	Mean Atmospheric Conditions
MAXIMUM POWER AND FUEL CONSUMPTION					
Rated Engine Speed (PTO speed 565 rpm)					
52.8 *(39.3)*	2300	3.30 *(12.50)*	0.438 *(0.267)*	15.99 *(3.15)*	
Standard Power Take-off speed (541 rpm)					
52.4 *(39.1)*	2202	3.23 *(12.21)*	0.431 *(0.262)*	16.25 *(3.20)*	
VARYING POWER AND FUEL CONSUMPTION					
52.8 *(39.3)*	2300	3.30 *(12.50)*	0.438 *(0.267)*	15.99 *(3.15)*	Air temperature
47.0 *(35.0)*	2401	2.88 *(10.89)*	0.429 *(0.261)*	16.33 *(3.22)*	60°F *(16°C)*
35.8 *(26.7)*	2434	2.31 *(8.75)*	0.453 *(0.276)*	15.47 *(3.05)*	Relative humidity
24.0 *(17.9)*	2446	1.78 *(6.75)*	0.521 *(0.317)*	13.45 *(2.65)*	70%
11.9 *(8.9)*	2475	1.31 *(4.95)*	0.767 *(0.467)*	9.14 *(1.80)*	Barometer
-- --	2491	0.91 *(3.44)*	-- --	-- --	29.2" Hg *(98.8 kPa)*

Maximum Torque -151.9 lb.-ft. *(205.9 Nm)* at 1205 rpm
Maximum Torque Rise -26.0%
Torque rise at 1800 engine rpm -18%

DRAWBAR PERFORMANCE
BALLASTED - FRONT DRIVE ENGAGED
FUEL CONSUMPTION CHARACTERISTICS

Power Hp *(kW)*	Drawbar pull lbs *(kN)*	Speed mph *(km/h)*	Crank-shaft speed rpm	Slip %	Fuel Consumption lb/hp.hr *(kg/kW.h)*	Hp.hr/gal *(kW.h/l)*	Temp.°F (°C) cool-ing med	Air dry bulb	Barom. inch Hg *(kPa)*
75% of Pull at Maximum Power Five Hours 4th (4S) Gear									
33.4 *(24.9)*	2580 *(11.48)*	4.86 *(7.82)*	2377	3.4	0.561 *(0.341)*	12.49 *(2.46)*	176 *(80)*	73 *(23)*	28.9 *(97.8)*
MAXIMUM POWER IN SELECTED GEARS									
2nd (2S) Gear									
35.5 *(26.5)*	6785 *(30.17)*	1.96 *(3.16)*	2377	15.2	0.578 *(0.351)*	12.13 *(2.39)*	176 *(80)*	68 *(20)*	28.7 *(97.3)*
3rd (3S) Gear									
42.4 *(31.6)*	5180 *(23.05)*	3.07 *(4.94)*	2300	7.1	0.556 *(0.338)*	12.60 *(2.48)*	178 *(81)*	68 *(20)*	28.7 *(97.3)*
4th (4S) Gear									
42.7 *(31.8)*	3420 *(15.21)*	4.68 *(7.53)*	2300	4.4	0.544 *(0.331)*	12.89 *(2.54)*	176 *(80)*	68 *(20)*	28.7 *(97.3)*
5th (1F) Gear									
42.1 *(31.4)*	2780 *(12.36)*	5.68 *(9.14)*	2300	3.5	0.555 *(0.337)*	12.64 *(2.49)*	176 *(80)*	66 *(19)*	28.7 *(97.3)*
6th (2F) Gear									
38.7 *(28.9)*	1675 *(7.46)*	8.66 *(13.93)*	2300	1.9	0.606 *(0.368)*	11.58 *(2.28)*	176 *(80)*	66 *(19)*	28.7 *(97.3)*

Location of Test: Istituto Per La Meccanizzazione Agricola (IMA) Strada delle Cacce, 73-10135 Torino, Italy

Dates of Test: April - November, 1999

Manufacturer: New Holland Italia S.p.A., Viale delle, Nazioni, 55- 41100, Modena, Italy

FUEL and OIL : Fuel No. 2 Diesel **Specific gravity converted to 60°/60° F *(15°/15°C)*** 0.842 **Fuel weight** 7.01 lbs/gal *(0.840 kg/l)* **Oil SAE** 15W40 **API service classification** SE/CD **Oil consumption for 10 hours** 0.02 lb *(7.5 gm)* **Transmission and hydraulic lubricant** SAE 80W90 GL-4 **Front axle lubricant** SAE 80W90 GL-4

ENGINE: Make New Holland Diesel **Type** three cylinder vertical **Serial No.** 539-482963 **Crankshaft** lengthwise **Rated Engine speed** 2300 **Bore and stroke** 4.094" x 4.528" *(104 mm x 115 mm)* **Compression ratio** 18 to 1 **Displacement** 179 cu in *(2930 ml)* **Starting system** 12 volt **Lubrication** pressure **Air cleaner** two paper elements **Oil filter** one full flow cartridge **Oil Cooler** engine coolant heat exchanger for crankcase oil **Fuel filter** one paper element **Muffler** vertical **Cooling medium temperature control** thermostat

CHASSIS: Type 2WD and front wheel assist **Serial No.** 001151930 **Tread width** rear 48.1" *(1222 mm)* to 75.9" *(1927 mm)* front: 2WD - 53.1" *(1349 mm)* to 77.0" *(1957 mm)*, FWA - 50.1" *(1272 mm)* to 76.6" *(1945 mm)* **Wheel base** 2WD - 83.9" *(2130 mm)* FWA - 81.3" *(2065 mm)* **Hydraulic control system** direct engine drive **Transmission** selective gear fixed ratio **Nominal travel speeds mph *(km/h)*** first 1.47 *(2.37)* second 2.19 *(3.53)* third 3.23 *(5.19)* fourth 4.78 *(7.69)* fifth 5.77 *(9.28)* sixth 8.59 *(13.83)* seventh 12.63 *(20.33)* eighth 18.72 *(30.12)* reverse 1.42 *(2.29)*, 2.13 *(3.42)*, 3.13 *(5.03)*, 4.63 *(7.45)*, 5.59 *(8.99)*, 8.33 *(13.40)*, 12.24 *(19.69)*, 18.12 *(29.17)* **Clutch** dual dry disc operated by foot pedal **Brakes** wet disc hydraulically operated by two foot pedals which can be locked together **Steering** hydrostatic **Power take-off** 540 rpm at 2198 engine rpm or 1000 rpm at 2144 engine rpm **Unladen tractor mass** 2WD - 5645 lb *(2560 kg)*, FWA - 6460 lb *(2930 kg)*

DRAWBAR PERFORMANCE
BALLASTED - 2WD
FUEL CONSUMPTION CHARACTERISTICS

Power Hp *(kW)*	Drawbar pull lbs *(kN)*	Speed mph *(km/h)*	Crank-shaft speed rpm	Slip %	Fuel Consumption lb/hp.hr *(kg/kW.h)*	Fuel Consumption Hp.hr/gal *(kW.h/l)*	Temp.°F cool-ing med	(°C) Air dry bulb	Barom. inch Hg *(kPa)*
75% of Pull at Maximum Power Five Hours 4th (4S) Gear									
32.6 *(24.3)*	2580 *(11.48)*	4.74 *(7.63)*	2381	5.5	0.564 *(0.343)*	12.44 *(2.45)*	177 *(81)*	70 *(21)*	29.3 *(99.2)*
MAXIMUM POWER IN SELECTED GEARS									
3rd (3S) Gear									
39.2 *(29.2)*	5115 *(22.76)*	2.87 *(4.62)*	2365	15.0	0.588 *(0.357)*	11.99 *(2.35)*	176 *(80)*	70 *(21)*	29.4 *(99.4)*
4th (4S) Gear									
41.9 *(31.2)*	3460 *(15.40)*	4.54 *(7.30)*	2300	7.1	0.550 *(0.334)*	12.76 *(2.51)*	176 *(80)*	70 *(21)*	29.4 *(99.4)*
5th (1F) Gear									
42.1 *(31.4)*	2835 *(12.61)*	5.57 *(8.96)*	2300	5.5	0.545 *(0.335)*	12.86 *(2.53)*	174 *(79)*	70 *(21)*	29.4 *(99.4)*
6th (2F) Gear									
38.5 *(28.7)*	1742 *(7.75)*	8.29 *(13.34)*	2260	4.5	0.596 *(0.363)*	11.75 *(2.32)*	174 *(79)*	68 *(20)*	29.4 *(99.4)*

REPAIRS AND ADJUSTMENTS: No repairs or adjustments

REMARKS: All test results were determined from observed data obtained in accordance with official OECD test procedures. The performance results on this summary were taken from OECD tests conducted under the Code I Test procedure.

We, the undersigned, certify that this is a true summary of data from OECD Reports No. **1902** and **1903,** Nebraska Summary 331, December 13, 2000.

Brent T. Sampson
Test Engineer

L.L. Bashford
M.F. Kocher
R.D. Grisso, Jr.
Board of Tractor Test Engineers

TN 65D-2WD

TIRES, BALLAST AND WEIGHT		With Ballast	Without Ballast
Rear Tires	-No., size, ply & psi *(kPa)*	Two 16.9R30;**;23 *(160)*	Two 16.9R30;**;23 *(160)*
Ballast	-Liquid (total)	None	None
	-Cast Iron (total)	440 lb *(200 kg)*	None
Front Tires	-No., size, ply & psi *(kPa)*	Two 7.50-16;8;54 *(370)*	Two 7.50-16;8;54 *(370)*
Ballast	-Liquid (total)	None	None
	-Cast Iron (total)	660 lb *(300 kg)*	None
Height of Drawbar		27.4 in *(695 mm)*	27.6 in *(700 mm)*
Static Weight with Operator	- Rear	4210 lb *(1910 kg)*	3815 lb *(1730 kg)*
	- Front	2700 lb *(1225 kg)*	1995 lb *(905 kg)*
	-Total	6910 lb *(3135 kg)*	5810 lb *(2635 kg)*

TN 65D-FWA

TIRES, BALLAST AND WEIGHT		With Ballast	Without Ballast
Rear Tires	-No., size, ply & psi *(kPa)*	Two 480/70R30; **;23 *(160)*	Two 480/70R30; **;23 *(160)*
Ballast	-Liquid (total)	None	None
	-Cast Iron (total)	440 lb *(200 kg)*	None
Front Tires	-No., size, ply & psi *(kPa)*	Two 380/70R20; **;23 *(160)*	Two 380/70R20; **;23 *(160)*
Ballast	-Liquid (total)	None	None
	-Cast Iron (total)	660 lb *(300 kg)*	None
Height of Drawbar		17.9 in *(455 mm)*	18.1 in *(460 mm)*
Static Weight with Operator	- Rear	4640 lb *(2105 kg)*	4245 lb *(1925 kg)*
	- Front	3085 lb *(1400 kg)*	2380 lb *(1080 kg)*
	-Total	7725 lb *(3505 kg)*	6625 lb *(3005 kg)*

TRACTOR SOUND LEVEL WITH CAB	FWA dB(A)	2WD dB(A)
At no load in 4th(4S) gear	80.0	80.0
Bystander in 8th(4F) gear	85.4	86.8

CENTER OF GRAVITY - 2WD	
Horizontal distance forward from centerline of rear wheels	28.7 in *(730 mm)*
Vertical distance above roadway	33.1 in *(840 mm)*
Horizontal distance from center of rear wheel tread	0.4 in *(10 mm)* to the left

CENTER OF GRAVITY - FWA	
Horizontal distance forward from centerline of rear wheels	29.3 in *(745 mm)*
Vertical distance above roadway	32.3 in *(820 mm)*
Horizontal distance from center of rear wheel tread	0.4 in *(10 mm)* to the left

TURNING ON A CONCRETE SURFACE (2WD)

Turning radius with brake applied right 122" *(3.10 m)* left 124" *(3.15 m)*
without brake right 142" *(3.60 m)* left 146" *(3.70 m)*
Turning space radius with brake applied right 126" *(3.20 m)* left 128" *(3.25 m)*
without brake right 140" *(3.55 m)* left 146 " *(3.70 m)*

TURNING ON A CONCRETE SURFACE (FWA)

Turning radius with brake applied right 140" *(3.55 m)* left 142" *(3.60 m)*
without brake right 169" *(4.30 m)* left 171" *(4.35 m)*
Turning space radius with brake applied right 146" *(3.70 m)* left 146" *(3.70 m)*
without brake right 173" *(4.40 m)* left 175 " *(4.45 m)*

THREE POINT HITCH PERFORMANCE (OECD Static Test)

CATEGORY: II
Quick Attach: None

Maximum Force Exerted Through Whole Range:	4045 lbs *(18.0 kN)* (at the frame)		
	4405 lbs *(19.6 kN)* (at lower link ends)		
i) Opening pressure of relief valve:	NA		High Flow Option
Sustained pressure with relief valve open:	3020 psi	*(208 bar)*	3020 psi *(208 bar)*
ii) Pump delivery rate at minimum pressure:	12.8 GPM	*(48.1 l/min)*	17.1 GPM *(64.9 l/min)*
iii) Pump delivery rate at maximum hydraulic power:	11.3 GPM	*(42.8 l/min)*	14.5 GPM *(55.0 l/min)*
Delivery pressure:	2540 psi	*(175 bar)*	2410 psi *(166 bar)*
Power:	16.7 HP	*(12.5 kW)*	20.4 HP *(15.2 kW)*

HITCH DIMENSIONS AS TESTED NO LOAD

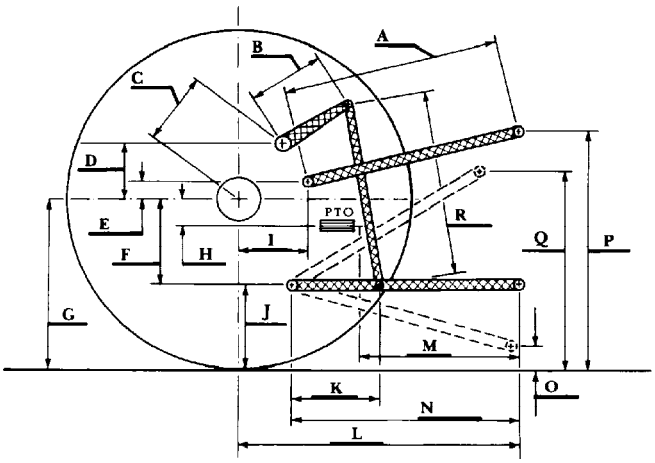

	inch	*mm*
A	26.6	*675*
B	10.0	*255*
C	12.3	*312*
D	10.9	*276*
E	12.1	*308*
F	7.4	*189*
G	27.3	*695*
H	1.2	*30*
I	13.4	*340*
J	19.9	*506*
K	20.6	*523*
L	40.7	*1035*
M	21.7	*550*
N	34.6	*880*
O	7.9	*200*
P	43.9	*1116*
Q	31.5	*800*
R	25.8	*655*

Agricultural Research Division
Institute of Agriculture and Natural Resources
University of Nebraska Lincoln
Darrell Nelson, Dean and Director