University of Nebraska - Lincoln
DigitalCommons@University of Nebraska - Lincoln

Publications from USDA-ARS / UNL Faculty

USDA Agricultural Research Service --Lincoln, Nebraska

1-1-2004

Boll Weevil (Anthonomus grandis Boheman) (Coleoptera: Curculionidae) Dispersal in the Southern United States: Evidence from Mitochondrial DNA Variation

Kyung Seok Kim
USDA-ARS

Thomas W. Sappington
USDA-ARS, tsapping@iastate.edu

Follow this and additional works at: http://digitalcommons.unl.edu/usdaarsfacpub

Part of the Agricultural Science Commons

Kim, Kyung Seok and Sappington, Thomas W., "Boll Weevil (Anthonomus grandis Boheman) (Coleoptera: Curculionidae) Dispersal in the Southern United States: Evidence from Mitochondrial DNA Variation" (2004). *Publications from USDA-ARS / UNL Faculty.* Paper 722.
http://digitalcommons.unl.edu/usdaarsfacpub/722

This Article is brought to you for free and open access by the USDA Agricultural Research Service --Lincoln, Nebraska at DigitalCommons@University of Nebraska - Lincoln. It has been accepted for inclusion in Publications from USDA-ARS / UNL Faculty by an authorized administrator of DigitalCommons@University of Nebraska - Lincoln.

Boll Weevil (*Anthonomus grandis* Boheman) (Coleoptera: Curculionidae) Dispersal in the Southern United States: Evidence from Mitochondrial DNA Variation

KYUNG SEOK KIM AND THOMAS W. SAPPINGTON[1]

USDA-Agricultural Research Service, Areawide Pest Management Research Unit, College Station, TX 77845

Environ. Entomol. 33(2): 457–470 (2004)

ABSTRACT An understanding of boll weevil (*Anthonomus grandis* Boheman) dispersal behavior is essential to characterizing and responding to the threat of migration into eradication zones. Genetic variation in boll weevil mitochondrial DNA (mtDNA) was sampled and analyzed to make inferences on the magnitude and geographic pattern of genetic differentiation among weevil populations from 20 locations across eight U.S. states and northeast Mexico. Polymerase chain reaction (PCR)-restriction fragment length polymorphisms (RFLPs) analysis was conducted on a 12.4-kb amplicon of mtDNA from each of 419 individuals. A total of 28 distinct mtDNA haplotypes, 17 of which were unique to single locations, were identified from restriction reactions of 10 informative endonucleases. Haplotype and nucleotide diversity was generally greater in southern than northern populations and was greater in the east than the west among northern populations. Genetic differentiation between eastern and western populations was pronounced, and phylogenetic analyses revealed two major clades corresponding to these regions. These results are consistent with historical boll weevil range expansion into the southeastern United States from Mexico and a secondary colonization of the High Plains. Evidence suggests that gene flow is limited between eastern and western populations but is relatively high among populations within the eastern region. In addition, estimates of gene flow indicate that migration between locations separated by <300 km is frequent.

KEY WORDS phylogeography, mitochondrial DNA restriction fragment length polymorphism, genetic diversity, gene flow, *Anthonomus grandis*

THE BOLL WEEVIL (*Anthonomus grandis* Boheman) is a serious pest of cotton in the Western Hemisphere. It has been eradicated from several states in the southeastern and far western United States, but many regions are still infested (Smith 1998, El-Lissy and Grefenstette 2002). Movement of weevils from infested areas into eradicated or nearly eradicated zones can occur naturally through flight (Allen et al. 2001) or inadvertently through human-mediated transport (Jones and Wilson 2002). This insect first entered the United States through natural dispersal from Mexico in 1892 through the southern tip of Texas (Burke et al. 1986), and its ability to disperse is evident from the history of its subsequent range expansion of 64–193 km/yr (Hunter and Coad 1923). Trapping data indicated that the spread of the boll weevil through previously uninfested areas of southern Brazil could occur at the rate of 97 km in a 3-d period and 160 km in a 9-d period (Lukefahr et al. 1994). Marked individuals have been recaptured 105–272 km from the point of release (Guerra 1988, Raulston et al. 1996). Thus, we know that boll weevils can disperse long distances, but the frequency and geographic patterns of such long-range movement are still unknown.

The potential economic consequences of reinfestation of an eradicated zone by boll weevils are great, so detection and prevention of such events is a high priority. When a reintroduction does occur, a question of paramount importance is the source of the weevils. Although circumstantial evidence often implicates migrants as the source of unexpected increases in pheromone trap captures in eradication zones, such evidence is seldom unequivocal, and the origin of migrants is even less certain. We have begun research to determine the usefulness of DNA markers in providing better information on the distance and magnitude of boll weevil dispersal and in identifying (or eliminating as improbable) potential sources of migrants captured in eradicated areas. A better understanding of boll weevil dispersal patterns and population interchange will permit scientists and action agencies to develop realistic and more effective strategies for monitoring and responding to boll weevil

Mention of trade names or commercial products in this article is solely for the purpose of providing specific information and does not imply recommendation or endorsement by the U.S. Department of Agriculture.

[1] USDA-Agricultural Research Service, Corn Insects & Crop Genetics Research Unit, Ames, IA 50011 (e-mail: tsapping@iastate.edu).

This article is a U.S. government work, and is not subject to copyright in the United States.

reintroductions to eradication and posteradication zones.

Mitochondrial DNA (mtDNA) analysis has proven particularly useful in studying genetic variation within animal species, as well as differences among closely related species. The properties of mtDNA have been reviewed in detail by Avise et al. (1987). mtDNA restriction fragment length polymorphisms (RFLPs) have been successfully used to analyze the phylogeographies of a wide range of animals, including insects (Avise et al. 1987, Roehrdanz et al. 1994). Development of the polymerase chain reaction (PCR) has greatly increased the speed with which RFLP data can be generated and has proven to be an excellent alternative to conventional restriction approaches (Simon et al. 1993, Roehrdanz et al. 1994). Most studies employing PCR-RFLPs have used PCR products <3,000 bases in length. The small size of such PCR products often limits the number of available restriction sites, sometimes making RFLPs less useful for characterizing recently diverged populations or animals with limited mtDNA variation. Use of much longer mtDNA fragments expands the potential use of PCR RFLP analysis. Amplifications of long fragments of mtDNA and the potential advantages of their use in insect population studies have been reported (Roehrdanz 1995).

Until recently, population genetics studies of the boll weevil have relied mainly on isozyme analyses (Biggers and Bancroft 1977, Bartlett 1981, Bartlett et al. 1983, Terranova et al. 1990, Terranova et al. 1991, Biggers et al. 1996). A disadvantage of using proteins for such studies is that they are not necessarily selectively neutral (Neigel 1997, Eanes 1999), and there is evidence that this is the case for commonly examined esterase loci in the boll weevil (Biggers et al. 1996). There are a few reports of DNA marker analyses of boll weevil populations. Roehrdanz and North (1992) screened intact mtDNA purified from four laboratory colonies of boll weevil that originated from different populations with 16 restriction enzymes and found that sequence divergence ranged from ≈0.5 to 2.6%. Roehrdanz and Degrugillier (1998) published the sequences of 10 PCR primers and 14 primer combinations for amplifying fragments of boll weevil mtDNA. Roehrdanz (2001) amplified a 9.2-kb fragment of mtDNA by PCR and generated RFLP patterns with five endonucleases. They showed that RFLPs can be used to distinguish "thurberia" boll weevils, which reproduce on wild cotton in the mountains of Arizona, from eastern weevils captured in cultivated cotton in Texas and northeastern Mexico. Genetic variation in the latter populations was low. Based on the results of random amplification of polymorphic DNA (RAPD) analyses, Scataglini et al. (2000) suggested that natural populations of boll weevils existed in South America before extensive cotton cultivation.

We surveyed genetic variation among widely separated populations of boll weevils by RFLP analyses of a long (12.4-kb) PCR fragment of mtDNA amplified using two of the primers developed by Roehrdanz and Degrugillier (1998). Our goal was to characterize the magnitude and geographic patterns of genetic differentiation in boll weevils from populations in the south central Cotton Belt of the United States and northeast Mexico. The results of this study shed light on boll weevil gene flow between populations and form the foundation necessary to proceed with more thorough DNA fingerprinting of weevil populations.

Materials and Methods

Sample Collection. Boll weevils of both sexes were collected in traps baited with aggregation pheromone from 20 locations in New Mexico (NM), Texas (TX), Oklahoma (OK), Missouri (MO), Arkansas (AR), Louisiana (LA), Tennessee (TN), and Mississippi (MS) in the United States and from northeastern Mexico (MX) in the cotton growing region just north of Tampico (Table 1). Weevils were collected in multiple traps at each location and frozen. Although there are many factors that generate spatial and temporal variation in numbers of boll weevils captured by pheromone traps (Sappington and Spurgeon 2000, Sappington 2002), we make the assumption that different mtDNA haplotypes are sampled randomly from a local population. For phylogeographic analyses, locations were grouped into three main regions designated as southcentral, western, and eastern. Within these three regions, each location was separated by <300 km from its nearest neighbor, except in the case of MX. The MX location is ≈430 km south of WTX, but for convenience was included in the southcentral region.

PCR Reactions and RFLP Analysis. Total genomic DNA was extracted from individual boll weevils using Promega's Wizard isolation kit (Promega, Madison, WI), according to the manufacturer's protocol. A long fragment of mtDNA was amplified by PCR using the 12S and C1 primers described by Roehrdanz and Degrugillier (1998). Sequences of the primers are 12S, 5′-AAACTAGGATTAGATACCCTATTAT-3′ and C1, 5′-TTGATTTTTTGGTCATCCAGAAGT-3′. This fragment comprises most of the weevil mtDNA, excluding the AT-rich and ND2 regions. The PCR reaction was performed in a total volume of 50 μl using 15–50 ng of genomic DNA, 2.5 mM $MgCl_2$, 400 μM of each dNTP, 0.4 μM of each primer, and 1.5 U of LA *Taq* polymerase (Panvera, Madison, WI). Amplification was carried out in a GeneAmp PCR system 9700 thermocycler (Perkin Elmer, Norwalk, CT). PCR cycling conditions were as described by Roehrdanz (1995) with slight modifications. The reaction began with a "cool start" followed by cycling parameters: 94°C, 1 min; 15 cycles of 94°C, 1 min, 60°C, 12 min; 20 cycles of 94°C, 1 min; 60°C, 12 min with 15-s auto extend; 72°C, 10 min; and 4°C hold.

Aliquots of 3–8 μl (depending on DNA quantity) of the amplified mtDNA fragment were digested in 96-well microtiter plates with a total volume of 20 μl using 1.5 U of each restriction enzyme and buffer provided by enzyme suppliers (Fermentas, Hanover, MD; Promega). PCR products and resulting restriction fragments were separated electrophoretically in 1.0–3.5% agarose gels (depending on the enzyme) in 1× TBE

Table 1. Locations of boll weevil collections and corresponding abbreviations, sample sizes, collection dates, and collectors

Region	Location	Abbreviation	Sample size	Collection date	Collector
Southcentral	Tampico, Mexico	MEX	27	07-Apr-99	Greenberg, ARS-IFNRRU
	Weslaco, TX	WTX	24	05-Jun-00	Sappington, ARS-IFNRRU
	Kingsville, TX	KTX	27	07-Oct-02	Montgomery, TBWEF
	El Campo, TX	ETX	25	01-Aug-02	Mote, TBWEF
	College Station, TX	CSTX	16	30-May-00	Spurgeon, ARS-APMRU
	Waxahachie, TX	WATX	26	16-Sep-02	Knutson, Texas A&M
Western	Hobart, OK	HOK	18	11-Dec-01	Massey, OBWEO
	Stamford, TX	STX	15	14-Aug-01	Cleveland, TBWEF
	Childress, TX	CHTX	25	01-Aug-01	Isbell, TBWEF
	Plainview, TX	PTX	19	11-Sep-01	Jones, TBWEF
	Big Spring, TX	BTX	15	14-Aug-01	Melendez, TBWEF
	Artesia, NM	ANM	21	16-Oct-01	Norman, PVCBWCC
Eastern	Gilliam, LA	GLA	19	18-Jun-01	Courtright, LDAF
	Winnsboro, LA	WLA	21	06-Jul-01	Pylant, LDAF
	Little Rock, AR	LAR	21	17-Jul-01	Kiser, ABWEF
	Cleveland, MS	CMS	20	24-Sep-01	Sprouse, SEBWEP
	Yazoo City, MS	YMS	20	11-Oct-01	Keene, SEBWEF
	Smithville, MS	SMS	18	08-Jul-02	Boyd, SEBWEF
	Malden, MO	MMO	21	30-Jan-02	Smith, SEBWEF
	Brownsville, TN	BTN	21	21-Jun-01	Seward, SEBWEF

ARS, Agricultural Research Service; IFNRRU, Integrated Farming and Natural Resources Research Unit; TBWEF, Texas Boll Weevil Eradication Foundation; APMRU, Areawide Pest Management Research Unit; OBWEO, Oklahoma Boll Weevil Eradication Organization; PVCBWCC, Pecos Valley Cotton Boll Weevil Control Committee; LDAF, Louisiana Department of Agriculture and Forestry; ABWEF, Arkansas Boll Weevil Eradication Foundation; SEBWEF, South Eastern Boll Weevil Eradication Foundation.

buffer (90 mM Tris-borate, 2 mM EDTA), followed by staining with ethidium bromide (0.2 μg/ml). Stained gels were documented with a Chemi Doc imaging system, and restriction fragments were scored with Quantity One Software (Bio-Rad Laboratories, Hercules, CA). A 1-kbp DNA ladder (Stratagene, La Jolla, CA) and a 100-bp DNA ladder (Fermentas) were used as molecular weight size standards. In a preliminary test, amplified fragments from 60 weevils, which included 3 individuals from each location, were screened for polymorphisms using 28 restriction enzymes. Of these, 10 enzymes (*Eco*RI, *Msp*I, *Rsa*I, *Hinf*I, *Taq*I, *Vsp*I, *Bsi*YI, *Dde*I, *Nde*II, and *Hae*III) revealed mtDNA variation between at least two populations and were therefore selected for further study. The restriction fragment patterns generated by 17 other enzymes (*Hha*I, *Sau*96I, *Scr*FI, *Bam*HI, *Bgl*II, *Bsp*106I, *Dra*I, *Eco*RV, *Hha*I, *Hind*III, *Hpa*I, *Kpn*I, *Pst*I, *Sac*I, *Sfu*I, *Xba*I, and *Xho*I) appeared monomorphic and were not analyzed further. The products of one enzyme (*Mse*I) were unresolvable in our gel system and therefore could not be used. A total of 1173 nucleotide base pairs per individual were sampled by the 27 resolvable restriction enzymes tested in the preliminary screening, and 877 bp were sampled among the 10 enzymes that revealed polymorphic fragment patterns.

Data Analysis. Differences in banding patterns arose from presence or absence of restriction fragments of certain sizes and were used to analyze genetic structuring among boll weevil populations. A single letter was used to designate each restriction fragment length profile. A multi-letter code, based on the restriction patterns across all enzymes, was assigned to the composite mtDNA haplotype observed for each weevil. The minimum path network interconnecting the composite haplotypes was constructed by the parsimony approach of Avise et al. (1979). This approach is based on the assumption that the digestion patterns of closely related individuals sharing a common evolutionary origin are likely to be related by a single base substitution that results in the loss or gain of a restriction site. Divergence over time is assumed to reflect the accumulation of single base changes; therefore, the minimum number of hypothetical mutations separating two haplotypes is a relative measure of relatedness. Lines crossing branches of the tree indicate the minimum number of restriction site changes that occurred along a path. Some hypothetical fragments were assumed to explain all conjectured mutational steps (*Appendix* 1). The mean number of nucleotide substitutions per site (d) between all pairs of haplotypes was calculated based on restriction fragment information (Nei and Li 1979). Haplotype frequency distributions for each population and the associated d values were used to estimate haplotype (h) and nucleotide diversity (π) within populations (Nei 1987). Nucleotide divergence among populations was estimated according to the equation described by Nei and Tajima (1981). Geographic heterogeneity based on haplotype frequency distributions and its significance was calculated from 10,000 resamplings using a Monte Carlo simulation (Roff and Bentzen 1989).

All calculations above were computed using programs included in the REAP package (McElroy et al. 1991). The analysis of molecular variance (AMOVA) (Excoffier et al. 1992) program in ARLEQUIN (Schneider et al. 2000) was used to evaluate the degree of genetic differentiation among populations, ϕ_{ST} (analogous to F_{ST}) and to perform the hierarchical analysis of ϕ_{ST}. Indirect estimates of gene flow ($N_f m$: effective number of migrants per generation) were calculated from ϕ_{ST} using the equation of Wright

Table 2. Boll weevil mtDNA haplotype frequency distributions and measures of genetic diversity within populations: number of haplotypes (n_h), its ratio to the number of individuals sampled (n_h/n_i), haplotype diversity (h) with (SE), and percentage nucleotide diversity (π)

	Composite genotypes[a]	MEX	WTX	KTX	ETX	CSTX	WATX	HOK	STX	CHTX	PTX	BTX	ANM	GLA	WLA	LAR	CMS	YMS	SMS	MMO	BTN	Total no. of haplotype (%)
1	AAAAAAAAAA	0.074	0.333	0.444	0.577	0.563	0.4	0.833	0.8	0.68	0.579	0	0.667	0.158	0.048	0.19	0.25	0.15	0.278	0.143	0.333	156 (37.2)
2	ABABABBBAA	0	0.083	0.111	0.077	0.25	0.44	0	0.067	0	0	0	0.048	0.737	0.429	0.619	0.6	0.45	0.222	0.381	0.381	101 (24.1)
3	AABABAAAAA	0.037	0.083	0	0.038	0.063	0.04	0.111	0.133	0.08	0.263	1.0	0.286	0	0	0	0	0	0	0.143	0	41 (9.8)
4	ABAFABBBAA	0	0	0.074	0.077	0	0	0.056	0	0	0	0	0	0.105	0.524	0.048	0.1	0.1	0.222	0.143	0.19	34 (8.1)
5	BAAEAAAABA	0.37	0.417	0.111	0	0	0	0	0	0	0	0	0	0	0	0	0	0	0	0	0	23 (5.5)
6	AAAAAAACAA	0	0.042	0	0.115	0.125	0.04	0	0	0	0	0	0	0	0	0.095	0	0	0.278	0.19	0.095	20 (4.8)
7	AADAAAAAAA	0.222	0	0.037	0	0	0	0	0	0	0	0	0	0	0	0	0	0	0	0	0	7 (1.7)
8	ABCEAACBAA	0.074	0.042	0.037	0.077	0	0	0	0	0	0	0	0	0	0	0	0	0	0	0	0	6 (1.4)
9	ABABCBBBAA	0	0	0	0	0	0	0	0	0	0	0	0	0	0	0	0	0.25	0	0	0	5 (1.2)
10	AAAAAAAFAA	0.037	0	0	0	0	0	0	0	0.04	0.105	0	0	0	0	0	0	0	0	0	0	4 (1.0)
11	AABABDAAAA	0	0	0	0	0	0.04	0	0	0.04	0	0	0	0	0	0	0	0	0	0	0	2 (0.5)
12	ABABABBEAA	0	0	0.037	0	0	0	0	0	0	0	0	0	0	0	0	0.05	0	0	0	0	2 (0.5)
13	AABABADAAA	0	0	0	0	0	0	0	0	0.08	0	0	0	0	0	0	0	0	0	0	0	2 (0.5)
14	AAAAAAAAAB	0.074	0	0	0	0	0	0	0	0	0	0	0	0	0	0	0	0	0	0	0	2 (0.5)
15	AABAAAAAAA	0	0	0	0	0	0	0	0	0	0.053	0	0	0	0	0	0	0	0	0	0	1 (0.2)
16	AAAAACAAAA	0.037	0	0	0	0	0	0	0	0	0	0	0	0	0	0	0	0	0	0	0	1 (0.2)
17	AAECAAEACA	0.037	0	0	0	0	0	0	0	0	0	0	0	0	0	0	0	0	0	0	0	1 (0.2)
18	AAAADAAADA	0.037	0	0	0	0	0	0	0	0	0	0	0	0	0	0	0	0	0	0	0	1 (0.2)
19	ABADABBBAA	0	0	0	0	0	0	0	0	0	0	0	0	0	0	0	0.05	0	0	0	1	(0.2)
20	ACABABBBAA	0	0	0	0	0	0	0	0	0.04	0	0	0	0	0	0	0	0	0	0	0	1 (0.2)
21	AAFAAAAAAA	0	0	0	0	0	0	0	0	0.04	0	0	0	0	0	0	0	0	0	0	0	1 (0.2)
22	ABABABBDAA	0	0	0	0	0	0	0	0	0	0	0	0	0	0	0.048	0	0	0	0	0	1 (0.2)
23	AAAAAAAGAA	0	0	0	0	0	0.04	0	0	0	0	0	0	0	0	0	0	0	0	0	0	1 (0.2)
24	AAAEAAAAAA	0	0	0	0.038	0	0	0	0	0	0	0	0	0	0	0	0	0	0	0	0	1 (0.2)
25	AAAAAAFAAA	0	0	0.037	0	0	0	0	0	0	0	0	0	0	0	0	0	0	0	0	0	1 (0.2)
26	BAGGAAAHEA	0	0	0.037	0	0	0	0	0	0	0	0	0	0	0	0	0	0	0	0	0	1 (0.2)
27	AAAAAACAAA	0	0	0.037	0	0	0	0	0	0	0	0	0	0	0	0	0	0	0	0	0	1 (0.2)
28	AAAAAAAABA	0	0	0.037	0	0	0	0	0	0	0	0	0	0	0	0	0	0	0	0	0	1 (0.2)
	Total no.	27	24	27	26	16	25	18	15	25	19	15	21	19	21	21	20	20	18	21	21	419
	n_h	10	6	11	7	4	6	3	3	7	4	1	3	3	3	5	4	5	4	5	4	
	n_h/n_i	0.37	0.25	0.41	0.27	0.25	0.24	0.17	0.17	0.28	0.21	0.07	0.14	0.16	0.14	0.24	0.20	0.25	0.22	0.24	0.19	
	h	0.81	0.71	0.78	0.65	0.62	0.65	0.30	0.35	0.53	0.60	0.00	0.48	0.43	0.55	0.58	0.58	0.72	0.77	0.78	0.72	
	SE	0.04	0.04	0.05	0.07	0.07	0.04	0.09	0.10	0.08	0.07	0.00	0.06	0.09	0.04	0.08	0.07	0.05	0.02	0.04	0.03	
	π (%)	0.26	0.24	0.30	0.22	0.24	0.30	0.09	0.11	0.12	0.08	0.00	0.11	0.15	0.06	0.24	0.21	0.18	0.30	0.33	0.28	

[a] Composite genotypes are denoted by capital letters in the following order: *Eco*RI, *Msp*I, *Rsa*I, *Hinf*I, *Taq*I, *Vsp*I, *Bsi*YI, *Dde*I, *Nde*II, *Hae*III.

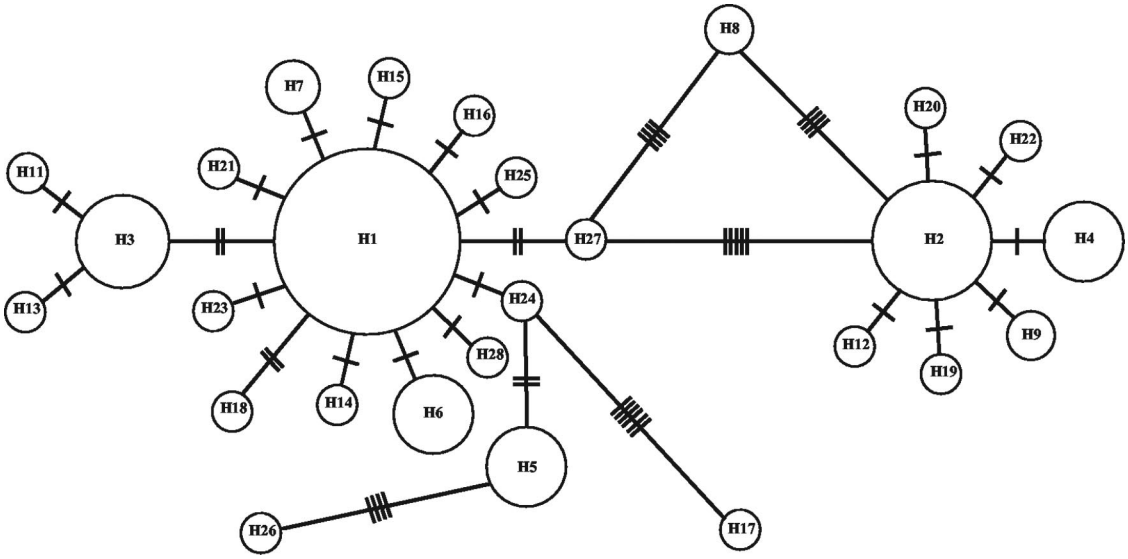

Fig. 1. A parsimony network among the 28 haplotypes (H1–H28) of boll weevil mtDNA identified in this study. Lines crossing branches indicate the number of hypothesized restriction site changes that occurred along a path. Circle area is proportional to haplotype frequency.

(1943), modified for mtDNA: $\phi_{ST} = 1/(1 + 2N_f m)$, where N_f denotes effective population number of mitochondria and m denotes the migration rate. Significance of ϕ-statistics was evaluated by performing 5,000 permutations of original data matrices and comparing the results to the original values.

The genetic relationships among populations were reconstructed using the FITCH and NEIGHBOR programs from the PHYLIP 3.5c computer package (Felsenstein 1993). The phylogenetic trees were based on nucleotide divergence (estimates of net nucleotide substitutions) between two populations (Nei and Tajima 1981). The degree of correlation between genetic distance (nucleotide divergence) and the geographical distance between populations was calculated from 5,000 replications and normalized by the Mantel statistic Z option using the MXCOMP program in NTSYSPC, version 1.70 (Rohlf 1992).

Results

Haplotype Frequencies and Genetic Diversity Within Populations. Of 28 restriction enzymes used in a preliminary screening, only 10 enzymes revealed polymorphic banding patterns in weevils (*Appendix* 1). The sum of the inferred fragment sizes for the patterns ranged from 12.4 to 12.7 kb. The slight variation in the sum of the fragments is probably caused by undetectable small fragments (<100 bp) generated by some enzymes and/or to imprecise measurements of the larger fragments. The total number of detectable restriction fragments for a single enzyme varied from 6 with *Eco*RI to 33 with *Dde*I, and the number of variable patterns produced by an enzyme ranged from 2 for *Eco*RI and *Hae*III to 8 for *Dde*I (*Appendix* 1). In the survey of all weevil populations, the 10 selected restriction enzymes produced 48 unique digestion patterns (*Appendix* 1). These generated 28 distinct haplotypes among the 419 weevils analyzed (Table 2). Eleven haplotypes were found in more than two locations, and 17 haplotypes were unique to single locations. The two most common haplotypes (1 and 2) were found in 61.3% of the weevils sampled, and they were widely distributed across weevil populations (Table 2). A parsimony network showing the relationship of the composite haplotypes indicates that most haplotypes are removed from the two most common haplotypes (H1 and H2) by only one or two mutational steps (Fig. 1). However, these two central haplotypes are separated from one another by at least seven mutations.

The number of observed haplotypes within locations varied from 1 in BTX to 11 in KTX, and the ratio of the number of observed haplotypes to the number of individuals sampled (n_h/n_i) ranged from 0.07 in BTX to 0.41 in KTX (Table 2). Within-location haplotype diversity ranged from 0 in BTX to 0.81 in MEX. The number of haplotypes (n_h), n_h/n_i, and haplotype diversity (h) values were generally high for southcentral populations (mean $n_h = 7.3$, $n_h/n_i = 0.30$, $h = 0.70$), and the values for eastern populations (mean $n_h = 4.1$, $n_h/n_i = 0.21$, $h = 0.64$) were higher than the values for western populations (mean $n_h = 3.5$, $n_h/n_i = 0.17$, $h = 0.38$). Nucleotide diversity ranged from 0% in BTX to 0.33% in MMO. Higher levels of *nucleotide* diversity were observed in southcentral populations (mean $\pi = 0.26\%$) and were greater in eastern regions (mean $\pi = 0.22\%$) than in western regions (mean $\pi = 0.09\%$; Table 2).

Genetic Differentiation and Gene Flow Among Populations. The value of ϕ_{ST} among all population pairs ranged from −0.05 (HOK versus STX) to 0.81

Table 3. Pairwise ϕ_{ST} estimates (above diagonal) and estimated effective number ($N_f m$) of migrants per generation (below diagonal)

	MEX	WTX	KTX	ETX	CSTX	WATX	HOK	STX	CHTX	PTX
MEX	—	0.049*	0.119***	0.221***	0.228***	0.232***	0.372***	0.338***	0.278***	0.234***
WTX	9.7	—	0.043^{NS}	0.123**	0.121*	0.155***	0.259***	0.221**	0.174**	0.143**
KTX	3.7	11.1	—	0.002^{NS}	0.005^{NS}	0.057*	0.106**	0.077*	0.045^{NS}	0.051^{NS}
ETX	1.8	3.6	314.1	—	-0.017^{NS}	0.091*	0.046^{NS}	0.024^{NS}	0.009^{NS}	0.029^{NS}
CSTX	1.7	3.6	107.9	pan[a]	—	0.005^{NS}	0.099*	0.043^{NS}	0.038^{NS}	0.046^{NS}
WATX	1.7	2.7	8.4	5.0	107.9	—	0.250***	0.186*	0.166**	0.154**
HOK	0.8	1.4	4.2	10.4	4.5	1.5	—	-0.050^{NS}	-0.002^{NS}	0.055^{NS}
STX	1.0	1.8	6.0	20.1	11.2	2.2	pan[a]	—	-0.017^{NS}	0.023^{NS}
CHTX	1.3	2.4	10.7	56.7	12.7	2.5	pan[a]	pan[a]	—	0.015^{NS}
PTX	1.6	3.0	9.4	16.6	10.4	2.7	8.5	21.1	32.8	—
BTX	0.5	0.4	0.4	0.3	0.3	0.3	0.1	0.1	0.3	0.4
ANM	1.2	2.3	6.2	12.7	10.0	2.5	19.1	pan[a]	43.2	pan[a]
GLA	0.9	1.0	1.5	1.0	1.4	5.1	0.4	0.5	0.6	0.7
WLA	1.2	1.1	1.6	1.1	1.1	1.8	0.5	0.5	0.7	0.8
LAR	1.3	1.5	2.4	1.6	2.8	19.3	0.6	0.8	0.9	1.1
CMS	1.3	1.6	3.0	1.8	3.4	64.4	0.7	0.9	1.1	1.2
YMS	1.9	2.0	3.5	2.0	3.1	8.6	0.8	1.0	1.2	1.4
SMS	2.3	3.2	9.0	7.1	9.8	6.9	1.3	1.6	2.2	2.6
MMO	2.3	2.7	4.4	2.9	5.1	11.5	0.9	1.2	1.5	2.0
BTN	2.0	3.0	11.8	6.0	20.2	pan[a]	1.4	1.9	2.3	2.5

Continued on next page

(HOK versus BTX; Table 3). Nonsignificant ϕ_{ST} values were observed mainly in adjacent population pairs within regions, whereas highly significant ϕ_{ST} values were revealed in all population paired-comparisons between western and eastern regions. The data showed that there was very little genetic differentiation in most population pairs within regions. However, the MEX, BTX, and WLA populations showed significant genetic differentiation from all other populations. There was also little genetic differentiation between some populations across regions (ETX and CSTX versus western populations and WATX versus eastern populations). Although the WATX population is genetically more similar to the eastern populations, it is geographically much closer to the CSTX population; therefore, its designation as a southcentral population was retained for analyses. The indirect estimates of gene flow ($N_f m$) consistently indicate frequent movement between populations separated by <300 km except in the case of the BTX and WLA populations (Table 3). There was also moderate to high gene flow between some populations across different regions, but little was observed between any two populations from western and eastern regions.

Haplotype frequencies differed significantly within regions as well as among regions, but when the monomorphic BTX population was excluded, there was no significant heterogeneity among western populations (Table 4). The AMOVA analyses revealed that most of the variation in haplotype frequencies could be attributed to variance within populations (e.g., 74.3% in case of all populations), but the variance components at all levels of the analysis were statistically significant ($P < 0.001$). Within-region ϕ_{ST} values revealed a much more pronounced genetic differentiation in western than in the other two regions, but when BTX was excluded, the western region exhibited the least genetic subdivision ($\phi_{ST} = 0.005$). Estimates of gene flow calculated from ϕ_{ST} values suggest an intermediate level of gene flow within the three regions ($N_f m = 4.1$ among southcentral populatons, $N_f m = 7.1$ among eastern populations, $N_f m = 1.3$ among western populations), showing a relatively high gene flow among populations from the eastern region. However, when the BTX population was excluded, a high level of gene flow was indicated among western populations ($N_f m = 99.5$). ϕ_{ST} values between regions suggest a considerable level of genetic differentiation between western and eastern populations.

Nucleotide divergence among weevil populations ranged from −0.01% (BTN versus MMO) to 0.62% (BTX versus WLA). Estimates of nucleotide divergence among the three main geographical regions were much higher than those within regions (Table 4). The highest nucleotide divergence was observed between the western and eastern regions.

Phylogeographic Relationships Among Populations. A qualitative method of data analysis can provide additional information not revealed by quantitative methods, especially regarding phylogeographic inferences among populations. Geographic distributions of mtDNA genotypes revealed by *Eco*RI, *Msp*I, and *Taq*I are shown in Fig. 2. The geographic patterns produced by each of the other enzymes are similar to one of the above distributions and can be inferred from Table 2. Digestion with *Hae*III revealed genotype variation in only two individuals from the MEX population. The "B" patterns of *Eco*RI and of *Nde*II were observed in 24 weevils collected from only extreme-south locations (MEX, WTX, KTX). The geographic distribution of genotypes revealed by several enzymes (*Msp*I, *Hinf*I, *Bsi*YI, *Dde*I, and *Vsp*I) exposed a deep genetic disparity between weevils from western and eastern regions, except in the case of the BTN and MMO populations, which showed intermediate genotypes. However, *Taq*I and *Rsa*I did not reveal any obvious patterns in geographic differences among populations. Overall, the genotypes of southcentral

Table 3. Continued.

BTX	ANM	GLA	WLA	LAR	CMS	YMS	SMS	MMO	BTN
0.503***	0.292***	0.346***	0.298***	0.277***	0.273***	0.211***	0.177***	0.179***	0.202***
0.545***	0.182**	0.331***	0.315***	0.247***	0.235***	0.197***	0.135***	0.155***	0.144***
0.535***	0.074*	0.252***	0.234***	0.174***	0.143**	0.126**	0.053^{NS}	0.102**	0.041^{NS}
0.596***	0.038^{NS}	0.339***	0.317***	0.242***	0.217***	0.201***	0.066*	0.147**	0.076*
0.650***	0.048^{NS}	0.257**	0.305***	0.150*	0.129*	0.140*	0.048^{NS}	0.090*	0.024^{NS}
0.595***	0.169**	0.089*	0.220**	0.025^{NS}	0.008^{NS}	0.055^{NS}	0.068^{NS}	0.042^{NS}	-0.007^{NS}
0.813***	0.026^{NS}	0.563***	0.524***	0.455***	0.421***	0.393***	0.274***	0.347***	0.261***
0.791***	-0.010^{NS}	0.508***	0.492***	0.395***	0.361***	0.340***	0.236**	0.295***	0.213**
0.653***	0.011^{NS}	0.445***	0.429***	0.349***	0.318***	0.294***	0.187***	0.255***	0.180***
0.552***	-0.029^{NS}	0.418***	0.394***	0.321***	0.293***	0.260***	0.164**	0.198***	0.164**
—	0.613***	0.756***	0.681***	0.666***	0.671***	0.596***	0.581***	0.491***	0.592***
0.3	—	0.453***	0.440***	0.354***	0.323***	0.300***	0.205***	0.237***	0.191**
0.2	0.6	—	0.185**	-0.022^{NS}	-0.023^{NS}	0.068^{NS}	0.199**	0.088*	0.087^{NS}
0.2	0.6	2.2	—	0.171**	0.144*	0.129*	0.127*	0.098*	0.099*
0.3	0.9	pan[a]	2.4	—	-0.033^{NS}	0.032^{NS}	0.105*	0.024^{NS}	0.027^{NS}
0.2	1.0	pan[a]	3.0	pan[a]	—	0.025^{NS}	0.108*	0.036^{NS}	0.007^{NS}
0.3	1.2	6.9	3.4	14.9	19.9	—	0.087*	0.034^{NS}	0.032^{NS}
0.4	1.9	2.0	3.4	4.3	4.2	5.3	—	-0.003^{NS}	-0.011^{NS}
0.5	1.6	5.2	4.6	20.7	13.3	14.3	pan[a]	—	-0.003^{NS}
0.3	2.1	5.2	4.6	18.2	68.7	15.0	pan[a]	pan[a]	—

[a] Denotes apparent panmixia, or free movement, between two locations.
*** $P < 0.001$; ** $P < 0.01$; * $P < 0.05$; NS, not significant.

populations were more variable than those of other populations and were intermediate in composition between those of western and eastern populations.

To resolve genetic relationships among populations, two phylogenetic trees [FITCH and neighbor-joining (NJ)] were reconstructed based on values of nucleotide divergence between populations (Fig. 3, A and B). The NJ tree was rooted with the MEX population, based on historical information on the spread of the boll weevil from Mexico into the United States in the late 19th century (Burke et al. 1986). The trees have similar topologies, with slight differences in branch length, and reveal two major clades. One clade contains populations from the southcentral and eastern regions, and the other clade contains populations from the western region. An unrooted NJ tree (Fig. 3C) indicates that there are two distinct and linearly connected patterns diverging from the MEX and WTX populations (Fig. 3C).

Genetic distance was positively correlated with geographic distance among all populations ($r = 0.392$, $P < 0.001$), reflecting isolation by distance across all three regions as a whole. When the three major regions were examined separately, populations within the southcentral and eastern regions showed significant correlations ($r = 0.832$, $P = 0.0026$ and $r = 0.594$, $P = 0.0114$, respectively), whereas there was no significant correlation among western populations ($r = -0.055$, $P = 0.3926$). Comparisons among populations from pairs of regions revealed significant correlations among populations from southcentral and eastern regions ($r = 0.509$, $P = 0.0022$) and from western and eastern regions ($r = 0.617$, $P = 0.0012$), but not among populations from southcentral and western regions ($r = 0.177$, $P = 0.1436$), which may reflect recent colonization of western from southcentral populations.

Discussion

Hypotheses on the origin and subsequent range expansion of the boll weevil through Mexico and the United States have been discussed by several authors (Fryxell and Lukefahr 1967, Burke and Cate 1979, Burke et al. 1986). Most have proposed a Meso-American (southern Mexico and northern Central America) origin based mainly on evidence from geographic variation of morphological characters and host plant associations (Burke et al. 1986). The explosive range expansion of the boll weevil from its native host began in the late 19th century and was made possible through the availability of cultivated cotton as a host (Burke et al. 1986). Burke et al. (1986) hypothesized two possible routes of northward spread of the boll weevil. The first involved dispersal up the east coast of Mexico and into the southeastern United States. The second required a crossing of the central highlands to northwestern Mexico and into southern Arizona from the Pacific coast. The initial dispersal of the boll weevil across the Cotton Belt of the southeastern United States averaged 95 km/yr, with the weevil reaching the Atlantic coast by the early 1920s (Culin et al. 1990). A secondary range expansion into the High Plains of Texas and New Mexico occurred several decades later, beginning in the late 1950s (Bottrell et al. 1972).

Because the boll weevil is a recent colonist of the United States, a relatively low level of genetic variation caused by founder effects is to be expected (Szalanski et al. 1999, Roehrdanz 2001), and both allozyme and mtDNA RFLP data are consistent with this supposition (Terranova et al. 1990, Roehrdanz 2001). In this study, the use of a long fragment of mtDNA and screening with a large number of restriction enzymes made it possible to identify enough RFLPs to analyze population genetic structuring in this insect despite its history of recent colonization. Our data revealed com-

Table 4. Analysis of molecular variance (AMOVA), heterogeneity test of haplotype frequencies, and nucleotide divergence among populations

Region	AMOVA analysis							Nucleotide divergence
	Variance components (% of variation)			ϕ-statistics[a]			Heterogeneity test (χ^2)	Mean value (%) (range)
	Among regions	Among populations within regions	Within populations	ϕ_{CT}	ϕ_{SC}	ϕ_{ST}		
Southcentral		0.044 (10.9%)	0.363 (89.1%)			0.109***	163.6***	0.024 (−0.010~0.094)
Western		0.082 (28.5%)	0.207 (71.5%)			0.285*** (0.005[NS])[b]	84.5*** (37.3[NS])[b]	0.033 (−0.006~0.127)
Eastern		0.023 (6.6%)	0.329 (93.4%)			0.066***	126.2***	0.027 (−0.010~0.134)
Southcentral versus Western	0.027 (7.2%)	0.060 (15.8%)	0.295 (77.1%)	0.072**	0.170***	0.229***	92.4***[c]	0.074 (0.020~0.244)
South central versus Eastern	0.043 (10.2%)	0.033 (7.8%)	0.345 (82.0%)	0.102***	0.087***	0.180***	116.4***[c]	0.149 (−0.008 ~0.442)
Western versus Eastern	0.115 (26.1%)	0.047 (10.6%)	0.278 (63.3%)	0.261***	0.144***	0.367***	162.4***[c]	0.297 (0.083 ~0.682)
All populations	0.061 (14.7%)	0.046 (11.0%)	0.308 (74.3%)	0.147***	0.129***	0.257***	1103.1***	0.134 (−0.010 ~ 0.682)

[a] ϕ_{CT}, ϕ_{SC}, and ϕ_{ST} are the correlation of haplotypes from populations within regions relative to the total, from populations relative to region, and from populations relative to the total, respectively.
[b] Values estimated with BTX excluded.
[c] Populations pooled from each location were compared with each other.
*** $P < 0.001$; ** $P < 0.01$; * $P < 0.05$; NS, not significant.

paratively high levels of haplotype and nucleotide diversities in southern populations of boll weevils, with lower levels in the more northerly populations (Table 2). This is the pattern one would expect if there are lingering genetic founder effects from the recent colonization. Similarly, although analyses of allozymic variation across the southeastern U.S. Cotton Belt indicated high genetic identity among all boll weevil populations sampled, the number of rare alleles, alleles per locus, polymorphism, and heterozygosity declined with distance from Mexico, in the direction of the original colonization event (Terranova et al. 1990). The RFLP data for the three Texas and one northeastern Mexico boll weevil populations reported by Roehrdanz (2001) are consistent with a decreasing gradient of genetic variation from south to north.

Phylogenetic trees revealed two major clades corresponding to the eastern and western regions, which represent the two historical range expansions into the southeastern Cotton Belt and into the High Plains, respectively (Hunter and Coad 1923, Bottrell et al. 1972). Populations from both the eastern and western regions apparently are derived from ancestral populations from northeast Mexico through deep South Texas (Fig. 3). Evidence from the geographic distributions of mtDNA genotypes, as well as from nucleotide divergence values in pair-wise comparisons of the three regions, indicate that southcentral populations are genetically intermediate between western and eastern populations (Fig. 2; Table 4). These findings are consistent with the initial pattern of range expansion observed when the boll weevil first entered the United States from Mexico (Burke et al. 1986). Eastern populations (MO, LA, TN, MS, AR) showed generally higher mtDNA diversity than western populations (northwestern TX, OK, NM). Because successful colonization in the latter areas has occurred only in more recent decades (Bottrell et al. 1972), there has been less time for the accumulation of genetic variation. Similarly, the lack of correlation between genetic and geographic distance among populations within the western region and in comparisons of southcentral and western populations may reflect the recent colonization of the latter from the south. The geographic pattern of haplotype frequencies and the presence of numerous unique haplotypes suggest that gene flow between eastern and western populations is limited.

Our data reveal that haplotypes 1 and 2 are the most common among boll weevils in the United States and northeastern Mexico, accounting for 61.3% of the total haplotypes determined in this study (257 of 417 samples; Table 2). In a parsimony network (Fig. 1), they occupy a central position in the two major clusters and connect separately to all other haplotypes. Haplotype 1 is the most widespread geographically, whereas haplotype 2 is found almost exclusively in southern and eastern populations. A large portion of the haplotypes (16 of 27) was related to haplotype 1 by only a few hypothetical restriction site changes. Haplotype 1 had the lowest mean d value (number of nucleotide substitutions per site; 0.0027) in pairwise comparisons

Fig. 2. Geographic variation in frequency distribution of mtDNA genotypes produced by three representative endonucleases. (A) *Eco*RI. (B) *Msp*I. (C) *Taq*I. Location abbreviations from Table 1.

with other haplotypes, whereas the mean *d* for haplotype 2 (0.0048) was quite high. Together, the wide geographic distribution of haplotype 1 and its apparent higher relatedness to the other haplotypes suggest that haplotype 1 is most likely the ancestral mtDNA genotype, or that it is very close to the original colonizing boll weevil haplotype. However, haplotype 2 cannot be excluded as the ancestral type, and data from larger samples will be needed to address this question more rigorously.

Geographic patterns of mtDNA variation observed in a number of animals were described and categorized by Avise et al. (1987). Our data permit us to consider assignment of these categories in the special case of boll weevils, an animal with a known history of recent dispersal into the southeastern United States. The presumed ancestral haplotype (1) occurs over a broad area, whereas most of the haplotypes we identified were found within single locations or a cluster of adjacent locations. Although the western and eastern regions do not seem to be isolated by long-term zoogeographic barriers to dispersal, the patterns exhibited by some haplotypes (2, 3, 4, 6) suggest limited gene flow between them. The results of a Monte Carlo simulation indicate a significant effect of geography on distribution of the haplotypes (Table 4). Furthermore, there is a significant positive relationship between genetic distance and geographic distance among total populations. Therefore, even though extensive gene flow is occurring between adjacent populations, corresponding to Avise et al.'s (1987) phylogeographic category IV (phylogenetic continuity, lack of spatial

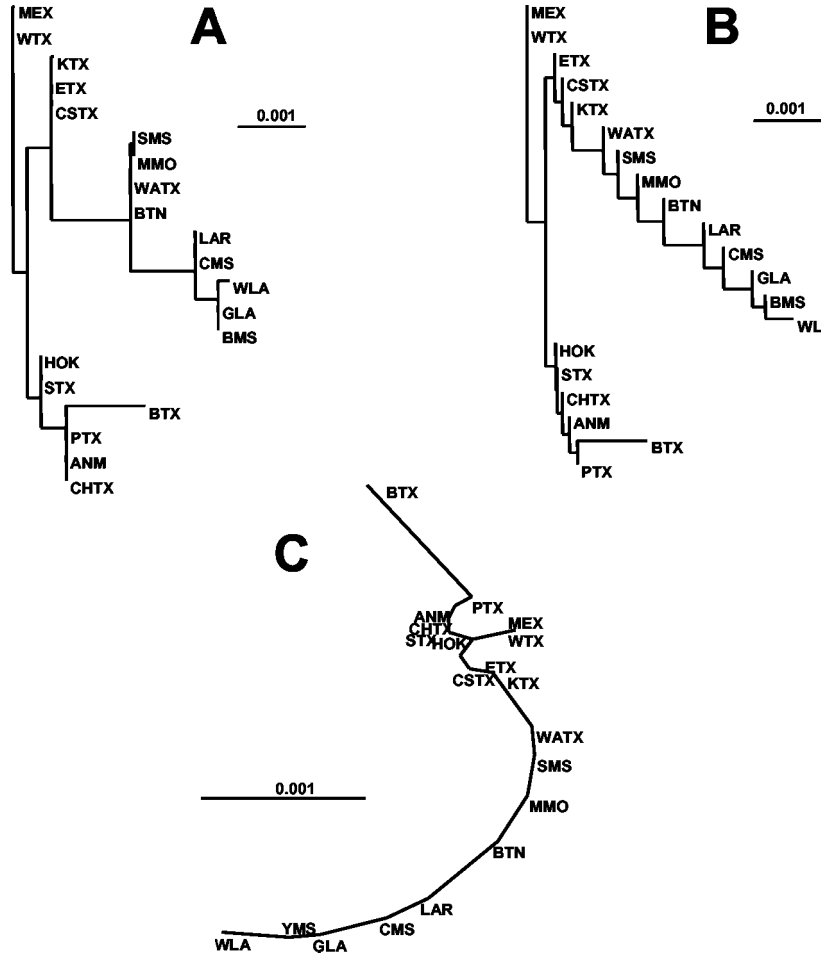

Fig. 3. Phylogenetic reconstructions of genetic relationships among boll weevil populations. (A) FITCH tree. (B) Neighbor-joining (NJ) tree. (C) Unrooted NJ tree. Scale bar indicates nucleotide substitution rate per site. Location abbreviations from Table 1.

separation), the relationship between boll weevil mtDNA haplotypes and geography beyond adjacent populations generally corresponds to examples of a mixture of phylogeographic categories III and V. Both categories are characterized by a continuous genetic divergence pattern, but category III patterns are typified by limited gene flow, and category V patterns are typified by intermediate gene flow. In practice, it is not easy to distinguish clearly between categories III and V. This is true in our case, probably because boll weevils have a recent history of colonization, with likely repeated genetic bottlenecks occurring at regional scales for several reasons, including human activity. Thus, it is not surprising that we observe rather complex patterns of population structure.

The populations from BTX and WLA displayed unusual haplotype frequencies within their respective regions. mtDNA variation was less in these populations than in adjacent locations (Table 2), especially in the case of BTX, which was monomorphic for haplotype 3 (Table 2). Except for BTX, western populations did not differ significantly in their haplotype frequency distributions (Table 4). mtDNA is highly sensitive to phenomena such as genetic drift, bottleneck events, and founder effects, because the mean time to fixation or loss of new mutations is approximately twice as fast for mitochondrial genes than for nuclear genes (Birky et al. 1983). With a sex ratio of one, the effective number of mitochondrial genes is one-fourth that of the effective number of nuclear genes. Therefore, it is likely that founder or bottleneck events have contributed to the loss of mtDNA variation in the BTX and WLA populations, resulting in incongruence between geographic origin and mtDNA variation in these populations.

Our analyses of genetic structuring suggest that gene flow between populations separated by <300 km is relatively high, and therefore, that the number of effective migrants exchanged per generation is high as well at these distances (Table 3). One must interpret these data with caution, however, because the same spatial patterns of divergence conceivably could have

been generated from historical accidents of colonization. The presence of rare or private alleles in many populations is striking and suggests that migration between the locations sampled may be more restricted than our estimates of $N_f m$ imply. mtDNA is more sensitive to genetic bottlenecks and founder effects than nuclear DNA (Birky et al. 1983), and its lack of recombination makes it functionally equivalent to a single locus (Dowling et al. 1990). Thus, F_{st} and N_m estimates based on other kinds of markers, like RAPDs and microsatellites, may be more reliable. Studies with such markers are underway.

Our findings have significant implications for boll weevil eradication programs. For example, the lower Coastal Bend region of Texas, including the area around Kingsville, has been in an eradication program for about 7 yr at the time of this writing. Although population levels have been suppressed to very low levels, final eradication has proven difficult. There are several factors contributing to this situation, but both human-mediated transport and natural migration of weevils from infested areas are of great concern as potential sources of reintroduction. The Lower Rio Grande Valley of Texas is not in an eradication program, and boll weevil populations tend to be chronically high. This area, which includes Weslaco, is located south of the lower Coastal Bend zone, with an intervening area of rangeland ≈100 km across where cotton is not grown. Because boll weevil reproduction is restricted almost entirely to cotton in the United States, it is possible that this intervening rangeland may serve as a geographic barrier to boll weevil dispersal between the Lower Rio Grande Valley and the southern portion of the Coastal Bend area.

Trapping data provides circumstantial evidence that the area around Kingsville routinely receives weevils originating in the Lower Rio Grande Valley (Allen et al. 2001). Our analyses suggest that significant gene flow is occurring between WTX and KTX populations. The phylogenetic reconstruction implies that the directionality of the gene exchange is primarily from south to north. The question now concerns the medium by which the immigrants arrive in the KTX area. If immigrants are most often introduced as hitchhikers on farm equipment originating in the Lower Rio Grande Valley, quarantine measures can be imposed to mitigate that threat. However, if a substantial proportion of immigrants arrive through natural dispersal, quarantine of farm equipment traveling out of the Lower Rio Grande Valley would be largely futile and unnecessary. Our phylogenetic analyses suggest that gene flow to KTX also occurs from the north out of the ETX and CSTX populations, a direction of immigration not expected if hitchhiking on the equipment of migrant farm workers is the primary medium of transport. Boll weevil movement by flight is influenced strongly by wind direction (Sappington and Spurgeon 2000, Westbrook et al. 2000), which in south Texas along the Gulf Coast is usually south to north during late summer, when weevil dispersal activity is greatest (Fenton and Dunnam 1928, Guerra 1986, Rummel and Summy 1997). However, weather systems producing a northerly wind flow are not uncommon, and weevil dispersal from north to south has been documented in the CSTX region (Westbrook et al. 2000). Thus, it seems likely that much of the apparent gene exchange between WTX and KTX was the result of natural dispersal by flight. Ongoing analyses of populations on a finer-grained geographic scale using both RFLP and RAPD markers will provide a more definitive test of this hypothesis.

Finally, it is important to emphasize that while RFLP profiles of one or a few weevils captured in an eradication zone can provide clues to potential source populations based on the data reported here, in many cases, it will be difficult to pinpoint an origin, because the predominant genotypes are geographically widespread. Nevertheless, there are a number of localized haplotypes that, when present, can serve to identify probable origins. In future studies, analyses of independent genetic loci, including RAPD and microsatellite markers, will be performed to improve genetic resolution of populations and to compensate for the potential pitfalls associated with deducing migration patterns based on a single locus (i.e., mtDNA).

Acknowledgments

We thank L. Saenz, V. Cardoza, V. Greenberg, and O. Zamora for technical assistance. We thank R. Roehrdanz and A. Szalanski for critically reviewing an earlier version of the manuscript and providing many helpful comments and suggestions. We are grateful to all the cooperators who sent us weevils from across the Cotton Belt.

References Cited

Allen, C. T., L. W. Patton, L. E. Smith, and R. E. Newman. 2001. Texas boll weevil eradication update. Proc. Beltwide Cotton Conf. 2: 934–937.

Avise, J. C., R. A. Lansman, and R. O. Shade. 1979. The use of restriction endonucleases to measure mitochondrial DNA sequence relatedness in natural populations. I. Population structure and evolution in the genus *Peromyscus.* Genetics. 92: 279–295.

Avise, J. C., J. Amond, R. M. Ball, E. Bermingham, T. Lamb, J. E. Neigel, C. A. Reeb, and N. C. Saunders. 1987. Intraspecific phylogeography: the mitochondrial DNA bridge between population genetics and systematics. Annu. Rev. Ecol. Syst. 18: 489–522.

Bartlett, A. C. 1981. Isozyme polymorphisms in boll weevils and thurberia weevils from Arizona. Ann. Entomol. Soc. Am. 74: 359–362.

Bartlett, A. C., W. C. Randall, and J. E. May. 1983. Allozyme variation among populations of boll weevils in Arizona and Mexico. Southwest. Entomol. 8: 118–130.

Biggers, C. J., and H. R. Bancroft. 1977. Esterases of laboratory reared and field-collected boll weevils, *Anthonomus grandis* Boheman: polymorphism of adult esterases and formal genetics of esterase II. Biochem. Genet. 15: 227–233.

Biggers, C. J., B. R. Jones, H. R. Bancroft, and L. A. Dickey. 1996. Genetics of esterases in laboratory and feral cotton boll weevils, *Anthonomus grandis* Boheman. Ecol. Agri. Pest. 53: 469–478.

Birky, C. W. Jr., T. Maruyama, and P. Fuerst. 1983. An approach to population and evolutionary genetic theory for genes in mitochondria and chloroplasts, and some results. Genetics. 103: 513–527.

Bottrell, D. G., D. R. Rummel, and P. L. Adkisson. 1972. Spread of the boll weevil into the High Plains of Texas. Environ. Entomol. 1: 136–140.

Burke, H. R., and J. R. Cate. 1979. A new species of Mexican *Anthonomus* related to the boll weevil (Coleoptera: Curculionidae). Ann. Entomol. Soc. Am. 72: 189–192.

Burke, H. R., W. E. Clark, J. R. Cate, and P. A. Fryxell. 1986. Origin and dispersal of the boll weevil. Bull. Entomol. Soc. Am. 32: 228–238.

Culin, J., S. Brown, J. Rogers, D. Scarborough, A. Swift, B. Cotterill, and J. Kovach. 1990. A simulation model examining boll weevil dispersal: historical and current situations. Environ. Entomol. 19: 195–208.

Dowling, T. E., C. Moritz, and J. D. Palmer. 1990. Nucleic acids II: restriction site analysis, pp. 250–317. *In* D. M. Hillis, and C. Moritz (eds.), Molecular systematics. Sinauer, Inc., Sunderland, MA.

Eanes, W. F. 1999. Analysis of selection on enzyme polymorphisms. Annu. Rev. Ecol. Syst. 30: 301–326.

El-Lissy, O., and B. Grefenstette. 2002. Boll weevil eradication in the U.S., 2001. Proc. Beltwide Cotton Conference.

Excoffier, L., P. Smouse, and J. Quattro. 1992. Analysis of molecular variance inferred from metric distances among DNA haplotypes: application to human mitochondrial DNA restriction data. Genetics. 131: 479–491.

Felsenstein, J. 1993. PHYLIP-phylogenetic inference package, version 3.57c. University of Washington, Seattle, WA.

Fenton, F. A., and E. W. Dunnam. 1928. Dispersal of the cotton-boll weevil, *Anthonomus grandis.* Boh. J. Agric. Res. 36: 135–149.

Fryxell, P. A., and M. J. Lukefahr. 1967. Hampea Schlecht: possible primary host of the boll weevil. Science. 155: 1568–1569.

Guerra, A. A. 1986. Boll weevil movement: dispersal during and after the cotton season in the Lower Rio Grande Valley of Texas. Southwest. Entomol. 11: 10–16.

Guerra, A. A. 1988. Seasonal boll weevil movement between northeastern Mexico and the Rio Grande Valley of Texas, USA. Southwest. Entomol. 13: 261–271.

Hunter, W. D., and B. R. Coad. 1923. The boll-weevil problem. U.S. Dep. Agric., Farmers' Bull. 1329.

Jones, R. G., and J. A. Wilson. 2002. Boll weevil: post eradication outbreaks in cotton in the southeastern United States. Beltwide Cotton Conferences.

Lukefahr, M. J., S. Barbosa, and R. B. Sabrinho. 1994. The introduction and spread of the boll weevil, Anthonomus grandis Boh. (Coleoptera) in Brazil. Southwest. Entomol. 19: 414–417.

McElroy, D., P. Moran, E. Bermingham, and J. Kornfield. 1991. REAP. The restriction enzyme analysis package. Version 4.0. University of Maine, Orono, ME.

Nei, M. 1987. Molecular evolutionary genetics. Columbia University Press, New York.

Nei, M., and W. H. Li. 1979. Mathematical model for studying genetic variation in terms of restriction endonucleases. Proc. Nat. Acad. Sci. USA. 76: 5269–5273.

Nei, M., and F. Tajima. 1981. DNA polymorphism detectable by restriction endonucleases. Genetics. 97: 145–163.

Neigel, J. E. 1997. A comparison of alternative strategies for estimating gene flow from genetic markers. Annu. Rev. Ecol. Syst. 28: 105–128.

Raulston, J. R., T. J. Henneberry, J. E. Leggett, D. N. Byrne, E. Grafton-Cardwell, and T. F. Leigh. 1996. Short- and long-range movement of insects and mites, pp. 143–162. *In* E. G. King, J. R. Phillips, and R. J. Coleman (eds.), Cotton insects and mites: characterization and management. Cotton Foundation Reference Book Series, No. 3. The Cotton Foundation Publisher, Memphis, TN.

Roehrdanz, R. L. 1995. Amplification of complete insect mitochondrial genome in two easy pieces. Insect Molec. Biol. 4: 169–172.

Roehrdanz, R. L. 2001. Genetic differentiation of Southeastern boll weevil and thurberia weevil populations of *Anthonomus grandis* (Coleoptera: Curculionidae) using mitochondrial DNA. Ann. Entomol. Soc. Am. 94: 928–935.

Roehrdanz, R. L., and D. T. North. 1992. Mitochondrial DNA restriction fragment variation and biosystematics of the boll weevil, *Anthonomus grandis.* Southwest. Entomol. 17: 101–108.

Roehrdanz, R. L., and M. E. Degrugillier. 1998. Long sections of mitochondrial DNA amplified from fourteen orders of insects using conserved polymerase chain reaction primers. Ann. Entomol. Soc. Am. 91: 771–778.

Roehrdanz, R. L., J. D. Lopez, J. Loera, and D. E. Hendricks. 1994. Limited mitochondrial DNA polymorphism in North American populations of *Heliothis virescens* (Lepidoptera: Noctuidae). Ann. Entomol. Soc. Am. 87: 856–866.

Roff, D. A., and P. Bentzen. 1989. The statistical analysis of mitochondrial DNA polymorphisms: χ^2 and the problem of small samples. Mol. Biol. Evol. 6: 539–545.

Rohlf, F. J. 1992. NTSYS-PC numerical taxonomy and multivariate analysis system, version 1.70. Exeter Publishers, Setauket, NY.

Rummel, D. R., and K. R. Summy. 1997. Ecology of the boll weevil in the United States Cottonbelt. Southwest. Entomol. 22: 356–376.

Sappington, T. W., and D. W. Spurgeon. 2000. Variation in boll weevil (Coleoptera: Curculionidae) captures in pheromone traps arising from wind speed moderation by brush lines. Environ. Entomol. 29: 807–814.

Sappington, T. W. 2002. Mutual interference of pheromone traps within trap lines on captures of boll weevils (Coleoptera: Curculionidae). Environ. Entomol. 31: 1128–1134.

Scataglini, M. A., V. A. Confalonieri, and A. A. Lanteri. 2000. Dispersal of the cotton boll weevil (Coleoptera: Curculionidae) in South America: evidence of RAPD analysis. Genetica. 108: 127–136.

Schneider, S., J.-M. Kueffer, D. Roessli, and L. Excoffier. 2000. ARLEQUIN manual, version 2.0. A software for population genetic analysis. Genetics and Biometry Laboratory, University of Geneva, Geneva, Switzerland.

Simon, C., C. McIntosh, and J. Deniega. 1993. Standard restriction fragment length analysis of the mitochondrial genome is not sensitive enough for phylogenetic analysis or identification of 17-year periodical cicada broods (Hemiptera: Cicadidae): the potential for a new technique. Ann. Entomol. Soc. Am. 86: 228–238.

Smith, J. W. 1998. Boll weevil eradication: area-wide pest management. Ann. Entomol. Soc. Am. 91: 239–247.

Szalanski, A. L., R. L. Roehrdanz, D. B. Taylor, and L. Chandler. 1999. Genetic variation in geographical populations of western and Mexican corn rootworm. Insect Mol. Biol. 8: 519–525.

Terranova, A. C., R. G. Jones, and A. C. Bartlett. 1990. The southeastern boll weevil: an allozyme characterization of its population structure. Southwest. Entomol. 15: 481–496.

Terranova, A. C., R. G. Jones, and A. C. Bartlett. 1991. An allozyme study of the laboratory boll weevil and its influence on some southeastern populations. Southwest. Entomol. 16: 1–11.

Westbrook, J. K., D. W. Spurgeon, R. S. Eyster, and P. G. Schleider. 2000. Wind-directed dispersal of boll weevils, *Anthonomus grandis* (Boh.). Proc. Beltwide Cotton Conf. 2: 1261–1265.

Wright, S. 1943. Isolation by distance. Genetics. 28: 114–138.

Received for publication 3 July 2003; accepted 19 October 2003.

Appendix 1. Approximate fragment sizes of restriction morphs observed in electrophoretic gels after digestion of long PCR product of boll weevil mtDNA with ten different restriction endonucleases

Enzyme	Pattern	Fragment size (kb)
*Eco*RI	A	3.9, 3.58, 2.04, 1.92, 1.18
	B	5.5, 3.9, 2.04, 1.18
*Msp*I	A	4.98, 2.8, 1.42, 1.32, 1.32, 0.45, 0.3
	B	6.4, 2.8, 1.32, 1.32, 0.45, 0.3
	C	9.2, 1.32, 1.32, 0.45, 0.3
*Rsa*I	A	4.42, 1.56, 1.35, 1.29, 0.8, 0.69, 0.52, 0.44, 0.43, 0.3, 0.25, 0.19, 0.18, 0.12
	B	4.42, 1.56, 1.49, 1.35, 1.29, 0.52, 0.44, 0.43, 0.3, 0.25, 0.19, 0.18, 0.12
	C	4.42, 1.56, 1.35, 0.8, 0.78, 0.69, 0.52, 0.51, 0.44, 0.43, 0.3, 0.25, 0.19, 0.18, 0.12
	D	2.93, 1.56, 1.49, 1.35, 1.29, 0.8, 0.69, 0.52, 0.44, 0.43, 0.3, 0.25, 0.19, 0.18, 0.12
	E	4.42, 2.14, 1.29, 1.1, 0.69, 0.52, 0.47, 0.44, 0.43, 0.3, 0.25, 0.19, 0.18, 0.12
	F	4.42, 1.56, 1.35, 1.29, 0.8, 0.52, 0.48, 0.44, 0.43, 0.3, 0.25, 0.21, 0.19, 0.18, 0.12
	G	4.42, 1.56, 1.35, 1.29, 0.78, 0.69, 0.52, 0.44, 0.43, 0.3, 0.25, 0.19, 0.18, 0.12 (0.02)
*Hinf*I	A	1.5, 1.38, 1.22, 1.1, 0.81, 0.76, 0.66, 0.6, 0.48, 0.37, 0.35, 0.33, 0.33, 0.32, 0.28, 0.26, 0.25, 0.25, 0.23, 0.21, 0.2, 0.18, 0.16, 0.11, 0.09
	B	1.5, 1.5, 1.38, 1.1, 0.81, 0.76, 0.66, 0.6, 0.48, 0.37, 0.35, 0.33, 0.33, 0.32, 0.26, 0.25, 0.25, 0.23, 0.21, 0.2, 0.16, 0.12, 0.11, 0.09, (0.06)
	C	1.5, 1.38, 1.12, 1.1, 0.81, 0.66, 0.6, 0.59, 0.48, 0.38, 0.37, 0.35, 0.33, 0.33, 0.32, 0.26, 0.25, 0.25, 0.23, 0.21, 0.2, 0.18, 0.17, 0.16, 0.11, 0.09
	D	1.73, 1.5, 1.5, 1.1, 0.81, 0.76, 0.66, 0.6, 0.48, 0.37, 0.33, 0.33, 0.32, 0.26, 0.25, 0.25, 0.23, 0.21, 0.2, 0.16, 0.12, 0.11, 0.09, (0.06)
	E	1.5, 1.5, 1.38, 1.1, 0.81, 0.76, 0.66, 0.6, 0.48, 0.37, 0.35, 0.33, 0.33, 0.32, 0.26, 0.25, 0.25, 0.23, 0.21, 0.2, 0.18, 0.16, 0.11, 0.09
	F	1.5, 1.5, 1.38, 1.1, 0.81, 0.76, 0.66, 0.6, 0.48, 0.37, 0.35, 0.33, 0.33, 0.32, 0.26, 0.25, 0.25, 0.23, 0.21, 0.2, 0.17, 0.16, 0.12, 0.11, 0.09, (0.06)
	G	1.5, 1.5, 1.38, 1.1, 0.81, 0.66, 0.6, 0.59, 0.48, 0.37, 0.35, 0.33, 0.33, 0.32, 0.26, 0.25, 0.25, 0.23, 0.21, 0.2, 0.18, 0.17, 0.16, 0.11, 0.09
*Taq*I	A	3.2, 1.32, 1.1, 0.85, 0.73, 0.66, 0.62, 0.55, 0.55, 0.51, 0.49, 0.49, 0.47, 0.4, 0.34, 0.3
	B	2.69, 1.32, 1.1, 0.85, 0.73, 0.66, 0.62, 0.55, 0.55, 0.51, 0.51, 0.49, 0.49, 0.47, 0.4, 0.34, 0.3
	C	2.34, 1.32, 1.1, 0.86, 0.85, 0.73, 0.66, 0.62, 0.55, 0.55, 0.51, 0.49, 0.49, 0.47, 0.4, 0.34, 0.3
	D	3.2, 1.32, 1.1, 1.04, 0.85, 0.73, 0.66, 0.62, 0.55, 0.51, 0.49, 0.47, 0.4, 0.34, 0.3
*Vsp*I	A	2.5, 1.35, 1.2, 0.98, 0.93, 0.84, 0.69, 0.63, 0.58, 0.58, 0.5, 0.5, 0.3, 0.28, 0.2, 0.19, 0.1, 0.08, 0.07
	B	2.5, 1.35, 1.2, 0.98, 0.93, 0.84, 0.63, 0.62, 0.58, 0.58, 0.5, 0.5, 0.3, 0.28, 0.2, 0.19, 0.1, 0.08, 0.07, 0.07
	C	2.5, 1.35, 1.2, 0.98, 0.93, 0.84, 0.8, 0.69, 0.63, 0.58, 0.58, 0.5, 0.28, 0.2, 0.19, 0.1, 0.08, 0.07
	D	2.5, 1.2, 0.98, 0.93, 0.93, 0.84, 0.69, 0.63, 0.58, 0.58, 0.5, 0.5, 0.42, 0.3, 0.28, 0.2, 0.19, 0.1, 0.08, 0.07
*Bsi*YI	A	4.2, 1.9, 1.52, 1.39, 1.26, 1.2, 0.85, 0.14, (0.02)
	B	4.2, 1.9, 1.39, 1.32, 1.28, 1.2, 1.05, 0.14
	C	4.2, 1.9, 1.39, 1.32, 1.28, 1.2, 0.85, 0.2, 0.14
	D	5.4, 1.9, 1.52, 1.39, 1.26, 0.85, 0.14, (0.02)
	E	4.2, 1.9, 1.39, 1.32, 1.26, 1.2, 0.85, 0.2, 0.14, (0.02)
	F	4.2, 2.37, 1.9, 1.39, 1.26, 1.2, 0.14, (0.02)
*Dde*I	A	1.66, 1.3, 1.2, 1.14, 0.6, 0.58, 0.58, 0.54, 0.52, 0.52, 0.44, 0.43, 0.4, 0.33, 0.29, 0.27, 0.23, 0.23, 0.2, 0.19, 0.19, 0.14, 0.14, 0.12, 0.1, 0.08
	B	1.66, 1.3, 1.2, 1.14, 0.68, 0.6, 0.58, 0.58, 0.52, 0.52, 0.44, 0.43, 0.4, 0.33, 0.29, 0.27, 0.23, 0.23, 0.2, 0.19, 0.19, 0.14, 0.12, 0.1, 0.08
	C	1.8, 1.3, 1.2, 1.14, 0.6, 0.58, 0.58, 0.54, 0.52, 0.52, 0.44, 0.43, 0.4, 0.33, 0.29, 0.27, 0.23, 0.23, 0.2, 0.19, 0.19, 0.14, 0.12, 0.1, 0.08
	D	1.66, 1.3, 1.2, 1.14, 0.68, 0.6, 0.58, 0.58, 0.52, 0.52, 0.49, 0.44, 0.43, 0.4, 0.33, 0.27, 0.23, 0.23, 0.19, 0.19, 0.14, 0.12, 0.1, 0.08
	E	1.66, 1.3, 1.2, 1.14, 0.77, 0.68, 0.6, 0.58, 0.52, 0.52, 0.44, 0.43, 0.4, 0.33, 0.29, 0.27, 0.23, 0.23, 0.2, 0.19, 0.14, 0.12, 0.1, 0.08
	F	1.66, 1.3, 1.2, 1.14, 0.66, 0.6, 0.58, 0.54, 0.52, 0.52, 0.44, 0.43, 0.4, 0.33, 0.29, 0.27, 0.23, 0.23, 0.2, 0.19, 0.19, 0.14, 0.14, 0.12, 0.1
	G	1.66, 1.3, 1.2, 1.14, 0.6, 0.58, 0.58, 0.54, 0.52, 0.52, 0.49, 0.44, 0.43, 0.4, 0.33, 0.27, 0.23, 0.23, 0.19, 0.19, 0.14, 0.14, 0.12, 0.1, 0.08
	H	1.66, 1.3, 1.2, 1.14, 0.6, 0.58, 0.54, 0.52, 0.52, 0.44, 0.43, 0.4, 0.33, 0.33, 0.29, 0.27, 0.25, 0.23, 0.23, 0.2, 0.19, 0.19, 0.14, 0.14, 0.12, 0.1, 0.08
*Nde*II	A	2.0, 2.0, 1.33, 1.25, 1.0, 0.98, 0.66, 0.64, 0.56, 0.52, 0.46, 0.33, 0.24, 0.24, 0.18, 0.15, 0.15
	B	2.0, 2.0, 1.33, 1.25, 1.0, 0.98, 0.66, 0.64, 0.56, 0.52, 0.46, 0.33, 0.3, 0.24, 0.24, 0.18
	C	2.0, 2.0, 1.33, 1.25, 1.0, 0.98, 0.66, 0.64, 0.56, 0.52, 0.33, 0.3, 0.24, 0.24, 0.18, 0.15, 0.15
	D	2.0, 2.0, 1.33, 1.25, 1.0, 0.98, 0.8, 0.66, 0.64, 0.52, 0.46, 0.33, 0.24, 0.18, 0.15, 0.15
	E	2.0, 2.0, 1.33, 1.0, 0.98, 0.73, 0.66, 0.64, 0.56, 0.52, 0.52, 0.46, 0.33, 0.3, 0.24, 0.24, 0.18
*Hae*III	A	2.7, 2.5, 2.03, 1.44, 1.22, 1.02, 0.8, 0.65, 0.3
	B	2.8, 2.7, 2.03, 1.44, 1.22, 1.02, 0.8, 0.65

Fragment size was estimated by comparing to size standards in a nearby lane. Bands that were consistently brighter than adjacent bands in our gel system were presumed to contain two fragments of the same size. Hypothetical fragments (in parentheses) sometimes were assumed in order to explain all conjectured mutational steps, but they were not used for data analysis. In a few cases, such as *Nde*II morph C and others, and *Hinf*I morphs B and F, we presume that fragments resulting from a gain of a restriction site were present but too small to be resolved. However, an insertion/deletion event rather than a point mutation cannot be excluded.