University of Nebraska - Lincoln
DigitalCommons@University of Nebraska - Lincoln

Publications from USDA-ARS / UNL Faculty

USDA Agricultural Research Service --Lincoln, Nebraska

1-1-2012

Owyhee Russet: AVariety with High Yields of U.S. No. 1 Tubers, Excellent Processing Quality, and Moderate Resistance to Fusarium Dry Rot (*Fusarium solani var. coeruleum*)

Solomon Yilma
Oregon State University, Solomon.Yilma@oregonstate.edu

M. I. Vales
ICRISAT

B. A. Charlton
Oregon State University

D. C. Hane
Oregon State University

S. R. James
Oregon State University

See next page for additional authors

Follow this and additional works at: http://digitalcommons.unl.edu/usdaarsfacpub

Yilma, Solomon; Vales, M. I.; Charlton, B. A.; Hane, D. C.; James, S. R.; Shock, C. C.; Mosley, A. R.; Culp, D.; Feibert, E.; Leroux, L.; Karaagac, E.; Knowles, N. R.; Pavek, M. J.; Stark, J. C.; Novy, R. G.; Whitworth, J. L.; Pavek, J. J.; Corsini, D. L.; Brandt, T. L.; Olsen, N.; and Brown, C. R., "Owyhee Russet: AVariety with High Yields of U.S. No. 1 Tubers, Excellent Processing Quality, and Moderate Resistance to Fusarium Dry Rot (*Fusarium solani var. coeruleum*)" (2012). *Publications from USDA-ARS / UNL Faculty.* Paper 1329.
http://digitalcommons.unl.edu/usdaarsfacpub/1329

This Article is brought to you for free and open access by the USDA Agricultural Research Service --Lincoln, Nebraska at DigitalCommons@University of Nebraska - Lincoln. It has been accepted for inclusion in Publications from USDA-ARS / UNL Faculty by an authorized administrator of DigitalCommons@University of Nebraska - Lincoln.

Authors
Solomon Yilma, M. I. Vales, B. A. Charlton, D. C. Hane, S. R. James, C. C. Shock, A. R. Mosley, D. Culp, E. Feibert, L. Leroux, E. Karaagac, N. R. Knowles, M. J. Pavek, J. C. Stark, R. G. Novy, J. L. Whitworth, J. J. Pavek, D. L. Corsini, T. L. Brandt, N. Olsen, and C. R. Brown

This article is available at DigitalCommons@University of Nebraska - Lincoln: http://digitalcommons.unl.edu/usdaarsfacpub/1329

Am. J. Pot Res (2012) 89:175–183
DOI 10.1007/s12230-012-9239-2

Owyhee Russet: A Variety with High Yields of U.S. No. 1 Tubers, Excellent Processing Quality, and Moderate Resistance to Fusarium Dry Rot (*Fusarium solani var. coeruleum)*

S. Yilma · M. I. Vales · B. A. Charlton · D. C. Hane · S. R. James · C. C. Shock · A. R. Mosley · D. Culp · E. Feibert · L. Leroux · E. Karaagac · N. R. Knowles · M. J. Pavek · J. C. Stark · R. G. Novy · J. L. Whitworth · J. J. Pavek · D. L. Corsini · T. L. Brandt · N. Olsen · C. R. Brown

Published online: 21 March 2012
© Potato Association of America 2012

This article is a U.S. government work, and is not subject to copyright in the United States.

Abstract Owyhee Russet (AO96160-3) originated from a cross between A89384-10 and A89512-3 in 1996. Owyhee Russet was released in 2009 by Oregon State University, in cooperation with the USDA-ARS and the Agricultural Experiment Stations of Idaho and Washington and is a product of the Northwest Potato Variety (Tri-State) Development Program. Owyhee Russet has semi-erect medium sized vines with medium to late maturity. The tubers are long, with a tan skin, medium russeting, and attractive tuber appearance for fresh market. Owyhee Russet was evaluated in several locations across the Northwest for more than 15 years. Total yield of Owyhee Russet is similar to that of Russet Burbank and Ranger Russet but significantly higher than Russet Norkotah. U.S. No.1 tuber yield of Owyhee Russet is significantly higher than Russet Burbank and Russet Norkotah, resulting in substantially higher

S. Yilma (✉) · E. Karaagac
Oregon State University,
Corvallis, OR 97331, USA
e-mail: Solomon.Yilma@oregonstate.edu

M. I. Vales
ICRISAT,
Patancheru 502324, A.P., India

B. A. Charlton · D. Culp
Oregon State University, Klamath Basin R & E Center,
Klamath Falls, OR 97603, USA

D. C. Hane · S. R. James · A. R. Mosley · L. Leroux
Retired from Oregon State University,
Corvallis, OR 97331, USA

C. C. Shock · E. Feibert
Oregon State University Malheur Experiment Station,
Ontario, OR 97914, USA

N. R. Knowles · M. J. Pavek
Washington State University,
Pullman, WA 99164, USA

J. C. Stark
University of Idaho, Twin Falls R & E Center,
Twin Falls, ID 83303 14, USA

R. G. Novy · J. L. Whitworth
U.S. Dept. of Agriculture (USDA)-Agricultural Research Service (ARS), Aberdeen Research & Extension (R & E) Center,
Aberdeen, ID 83210, USA

J. J. Pavek · D. L. Corsini
USDA-ARS,
Aberdeen, ID 83210 17, USA

T. L. Brandt · N. Olsen
University of Idaho, Kimberly R & E Center,
Kimberly, ID 83341, USA

C. R. Brown
USDA-ARS,
Prosser, WA 99350 16, USA

marketable yield. Owyhee Russet tubers have significantly higher specific gravity than Russet Burbank and Russet Norkotah. Fry color following tuber storage at 4°C and 9°C is significantly lighter for Owyhee Russet than the comparison varieties. Relative strengths include high yield with a very high proportion of U.S. No.1 tubers, good tuber appearance and excellent processing quality, resistance to cold sweetening, common scab and Fusarium dry rot. Weaknesses include susceptibility to foliar and tuber late blight and susceptibility to metribuzin herbicide injury. Allelic patterns of five SSR markers have shown that Owyhee Russet has a distinctive DNA genetic fingerprint from its russet type reference varieties which are Ranger Russet, Russet Burbank, and Russet Norkotah.

Resumen Owyhee Russet (AO96160-3) se originó de la cruza entre A89384-10 y A89512-3 en 1996. Owyhee Russet se liberó en 2009 por la Universidad Estatal de Oregon, en cooperación con el USDA-ARS y las Estaciones Agrícolas Experimentales de Idaho y Washington y es un producto del Programa de Desarrollo de Variedades de Papa del Noroeste (Tres Estados). Owyhee Russet tiene tallos semierectos de tamaño intermedio con madurez de intermedia a tardía. Los tubérculos son largos, con piel color café ligero, medio escamada y de apariencia atractiva para el mercado fresco. Se evaluó en varias localidades a lo largo del noroeste por mas de 15 años. Su rendimiento total es similar al de Russet Burbank y Ranger Russet, pero significativamente más alto que el de Russet Norkotah. El rendimiento de tubérculo U.S. No. 1 de Owyhee Russet es significativamente mayor que el de Russet Burbank y Russet Norkotah, lo que resulta en substancialmente mas alto rendimiento comercial. Los tubérculos de Owyhee Russet tienen significativamente más gravedad específica que Russet Burbank y Russet Norkotah. El color del freído después del almacenamiento a 4°C y 9°C es significativamente mas claro para Owyhee Russet que para las variedades de referencia. Las fortalezas relativas incluyen alto rendimiento con una muy alta proporción de tubérculos U.S. 1, buena apariencia de tubérculos y excelente calidad de procesamiento, resistencia al endulzado por frío, roña común, y la pudrición seca por Fusarium. Las debilidades incluyen susceptibilidad al tizón tardío del follaje y del tubérculo y a daño por el herbicida metribuzin. Los patrones alélicos de cinco marcadores SSR han mostrado que Owyhee Russet tiene una huella genética de ADN distintiva de sus variedades de referencia tipo russet que son Ranger Russet, Russet Burbank, y Russet Norkotah.

Keywords *Solanum tuberosum* · Breeding · Variety · Processing · Common scab resistance · Fusarium dry rot resistance

Introduction

Owyhee Russet (AO96160-3) originated from a cross made in 1996 by J. Pavek (USDA/ARS, Aberdeen, ID) between A89384-10 and A89512-3 (Fig. 1). Both parents shared Lemhi Russet, in their pedigree, which is a processing variety released in 1980 (Pavek et al. 1981). Owyhee Russet, tested as AO96160-3, was selected from single hills planted in Powell Butte, OR, in 1998. After three years of increase and preliminary evaluations, it was included in replicated Oregon statewide trials from 1999 through 2002. Breeder seed was initially multiplied at the Central Oregon Agricultural Experiment Station at Powell Butte. It entered Tri-State (OR, ID, WA) evaluations in 2003 and Western U.S. regional evaluations in 2004. The name Owyhee is selected in references to the Owyhee River which is a tributary of the Snake River located in northern Nevada, southwestern Idaho and southeastern Oregon. Owyhee Russet is a product of the Northwest Potato Variety (Tri-State) Development Program.

Cultivar Description

Plants, flowers, leaf, tubers and tuber sprout of Owyhee Russet are shown in Fig. 2.

Plants: medium height, semi-erect; stems weakly pigmented; medium stem wings; mid-season maturity (approx. 120 days after planting).

Leaves: Compound leaves are medium green (137B on the Royal Horticulture Society Color Chart-RHSCC) with an average of four pairs of primary leaflets and 4.2 pairs of secondary and tertiary leaflets. Leaf silhouette open; midribs and petioles not pigmented. *Terminal leaflets*: medium ovate; tip acuminate; base obtuse; slight wavy margins. *Primary leaflets*: small; shape narrowly ovate; tip acuminate; base obtuse, asymmetrical.

Flowers: Profuse flowering, violet corolla (82 C on RHSCC); pentagonal shape; bright yellow anthers (17 C on RHSCC); anther shape loose, flower buds weakly pigmented; calyx moderately pigmented; Male fertile with some pollen production. There is no berry production under field conditions.

Tubers: oblong to long; tan colored skin (164B on RHSCC); shallow eyes, evenly distributed; absent prominent eyebrows; white flesh; medium tuber set.

Sprouts: *Sprout base*: conical; blue-violet; strong pubescent, strongly pigmented; T*ip habit*: intermediate; strong pubescent, strongly pigmented; some root initials.

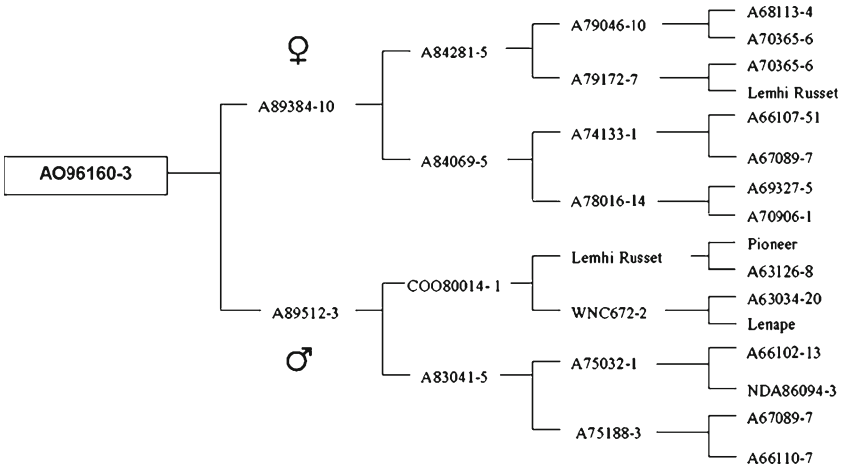

Fig. 1 Pedigree of Owyhee Russet

Agronomic Performance

Total yield for Owyhee Russet is similar to that of Russet Burbank and Ranger Russet but significantly higher than Russet Norkotah (Table 1). U.S. No. 1 tuber yield of Owyhee Russet is significantly higher than Russet Burbank and Russet Norkotah, resulting in substantially more yield of marketable quality potatoes (Table 1). Owyhee Russet produced higher yield of marketable tubers between 114 to 340 g in Oregon state wide trials from 2003 to 2006 at four locations (Table 2) when compared with Russet Burbank and Russet Norkotah. Owyhee Russet showed fewer culls, yields of tubers <114 g, and U.S. No. 2 categories when compared with the controls (Table 2). Owyhee Russet with its attractive tubers and high proportion of U.S. No. 1 marketable yield would also be suitable for fresh market.

Tuber Quality Characteristics and Usage

Processing Characteristics

Owyhee Russet produces tubers with significantly higher specific gravity than Russet Burbank and Russet Norkotah. A summary of fry color in the western regional trials over 3 years shows that Owyhee Russet had the lighter fry color when compared to Ranger Russet and Russet Burbank at two different storage temperatures (Table 3). The tubers of Owyhee Russet and the control varieties, Russet Burbank and Ranger Russet grown in Washington, Oregon, and Idaho were used to evaluate fry color using a Photovolt reflectance meter. The fry color was compared between the tuber's stem and bud end. Uniform fry color (defined as a change in light reflectance ≤9 units between the stem and bud ends) was

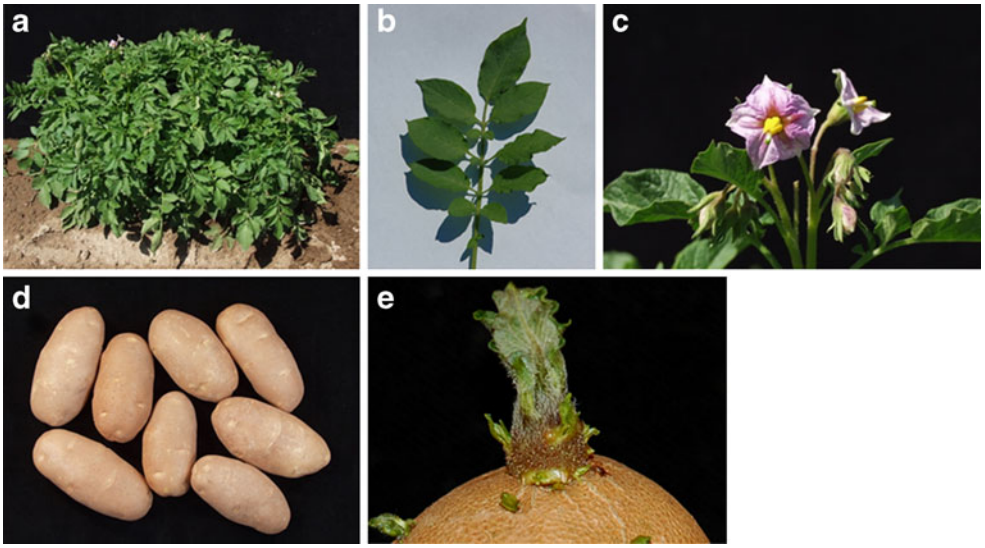

Fig. 2 Photographs of Owyhee Russet **a**) whole plant; **b**) leaf; **c**) flower **d**) tubers; and **e**) light sprouts

Table 1 Tuber yields of Owyhee Russet compared to those of Russet Burbank, Ranger Russet and Russet Norkotah in Western Regional[a] trials from 2004–2006

Variety	Total yield (mt/ha)	U.S. #1 yield[b] (mt/ha)	U.S.#1 %
Owyhee Russet	64.1	55.0	85.0
Russet Burbank	65.5	39.6	61.0
Ranger Russet	64.5	50.4	78.0
Russet Norkotah	47.9	38.8	81.0
Mean	60.4	46.0	76.0
CV (%)	1.7	2.2	11.0
LSD (0.05)	5.2	5.4	5.0

[a] Western Regional variety trials were conducted at 8 locations in California, Colorado, Oregon, Idaho and Washington

[b] US#1 yield considering only tubers greater than 114 g

obtained with Owyhee Russet grown in Washington and Idaho. Owyhee Russet had lower differential stem/bud light reflectance readings compared to the standard cultivars (Table 4). Owyhee Russet showed consistently lower differences in the percent reducing sugars between the bud and stem end compared to the standard cultivars. Percent glucose in Owyhee Russet remains low in storage, peak concentrations were 0.05% fresh weight(FW) at 5.6°C, and <0.02% FW at 7.2°C and 8.9°C in two years of testing showing it has resistant to cold sweetening (Fig. 3). Percent sucrose was similar to slightly lower in Owyhee Russet than in Russet Burbank, ranging from a high of 0.12% to a low of 0.07% FW. Stem end fry color remained at ≤USDA 1 throughout the 9-month storage period at the 5.5°C and 8.9°C, ≤ USDA 2 at 7.2°C over two storage seasons (Table 4). Mottling, a dark, uneven coloration which can occur in fried products, scored at a moderate to mild level at 5.6°C, and mild to none at 7.2°C and 8.9°C.

Post-Harvest Processing Evaluations Rating scores from evaluations that include fry color, reducing sugar concentrations, specific gravity, and sensory evaluations of fried product by taste panel evaluators showed that

Table 2 Average total yield, U.S.1 yield, and tuber size distribution of Owyhee Russet, Russet Norkotah, and Russet Burbank at four locations in Oregon State Wide Trials from 2003 to 2006

	Total yield (mt/ha)		Tuber size distribution (mt/ha)				
Cultivar	Total	U.S. No. 1	<114 g	114–340 g	>340 g	U.S. No. 2	Culls
Klamath Falls, OR							
Russet Burbank	59.4	34.1	6.2	27.5	8.2	14.4	4.7
Russet Norkotah	50.5	42.3	5.7	25.1	16.6	3.8	2.1
Owyhee Russet	55.2	47.0	2.3	32.8	14.3	2.0	0.5
Mean	55.0	41.2	4.7	28.5	13.0	6.7	2.4
[a]LSD (0.05)	3.7	3.7	1.5	3.5	2.7	3.0	1.4
Ontario, OR							
Russet Burbank	61.7	27.9	5.6	47.6	5.9	19.8	7.8
Russet Norkotah	42.8	35.8	4.4	37.9	9.3	2.1	0.5
Owyhee Russet	59.8	51.5	5.4	54.5	9.9	2.9	0.0
Mean	54.8	38.4	5.1	46.7	8.4	8.3	2.8
[a]LSD (0.05)	4.8	4.7	0.9	4.6	2.8	1.6	3.1
Hermiston, OR							
Russet Burbank	61.7	42.5	15.5	41.2	1.3	2.7	1.6
Russet Norkotah	58.9	45.4	11.7	42.7	2.7	1.2	0.6
Owyhee Russet	67.4	51.3	12.3	47.3	4.0	2.2	1.0
Mean	62.7	46.4	13.2	43.7	2.7	2.0	1.1
[a]LSD (0.05)	7.2	ns	3.5	ns	2.1	ns	ns
Corvallis, OR							
Russet Burbank	56.0	30.9	1.8	16.7	14.2	18.7	4.6
Russet Norkotah	46.9	36.8	1.3	14.5	22.3	3.0	1.6
Owyhee Russet	57.1	38.9	1.8	17.9	21.0	2.0	0.2
Mean	53.3	35.6	1.7	16.4	19.2	7.9	2.2
[a]LSD (0.05)	5.2	6.3	0.4	2.6	5.6	1.8	2.6

[a]Fisher's LSD (Least Significant Difference): significant at $P<0.05$; ns – not significant

Table 3 Tuber specific gravity French fry color and dry matter of Owyhee Russet, Russet Burbank, Ranger Russet, and Russet Norkotah

Variety	Specific gravity[a]	Fry color (4°C)[b]	Fry color (9°C)[b]
Owyhee Russet	1.089	2.49	0.7
Russet Burbank	1.079	3.59	1.6
Ranger Russet	1.088	3.08	1.5
Russet Norkotah	1.073	_	1.8
Mean	1.082	3.05	1.4
CV (%)	0.475	20.15	46.5
LSD (0.05)	0.003	0.60	0.4

[a] Specific gravity data from Western Regional potato variety trials grown in Oregon, Washington, Idaho, Colorado, and California from 2004–06

[b] French fry color of tubers stored at 4°C (40°F) and 9°C (48°F) sampled from the Western Regional potato variety trials. USDA color chart [0 (lightest) – 4 (darkest)]

Owyhee Russet had the highest average score compared to Ranger Russet and Russet Burbank (Table 5). These ratings were done on samples grown in Washington, Idaho, and Oregon and then evaluated under uniform conditions at Pullman, Washington. The evaluations showed that Owyhee Russet is the highest rated cultivar regardless of where the tubers were grown.

Internal and External Defects

Owyhee Russet tubers are less susceptible to growth cracks, second growth, hollow heart/brown center, blackspot bruise and internal brown spot than Russet Burbank tubers. However, the percentage of Owyhee Russet tubers with vascular discoloration seems higher than Russet Burbank, the values are not significantly different (Table 6).

Biochemical Composition

The biochemical composition of Owyhee Russet is very similar (not significantly different) to that of Russet Burbank (Table 7). Both dextrose and sucrose levels were lower than Russet Burbank as described in detail above in storage trials. Vitamin C levels were slightly higher than the control variety

Table 4 Post-harvest ratings of Owyhee Russet, Ranger Russet, and Russet Burbank following 7 months of storage (3 months at 8.9°C and 4 months at 6.7°C). Sprouting was measured following 59 days of storage at 8.9°C

Clone	Photovolt reading[a]			Difference[b]:	USDA color rating[c]	% reducing sugars[d]			Sprouting	
	Stem	Bud	Avg.	Stem vs. Bud Bud		Stem	Bud	Avg.	% of tubers	Sprout length (mm)
Washington										
Owyhee Russet	41.0	47.2	44.1**c**	7.5**a**	0.0	0.73	0.48	0.60	76.8**b**	14.3
Ranger Russet	23.3	32.0	27.6**a**	9.1**a**	2.0	1.94	1.10	1.52	93.0**b**	15.9
Russet Burbank	28.8	38.2	33.5**b**	9.9**a**	0.7	1.31	0.61	0.96	6.8**a**	2.4
Idaho										
Owyhee Russet	45.4	47.5	46.4**b**	4.3**a**	0.0	0.72	0.53	0.63	46.8**b**	4.8
Ranger Russet	31.2	39.5	35.4**a**	8.9**b**	0.0	1.39	0.72	1.05	56.8**b**	5.6
Russet Burbank	31.6	42.0	36.8**a**	11.4**b**	0.3	1.40	0.66	1.03	1.8**a**	0.8
Oregon										
Owyhee Russet	33.4	45.1	39.2**b**	11.8**a**	0.3	1.55	0.73	1.14	63.3**b**	11.9
Ranger Russet	18.7	32.7	25.7**a**	14.2**ab**	2.7	3.89	1.10	2.49	85.0**c**	20.6
Russet Burbank	20.2	37.5	28.9**a**	17.3**b**	2.3	2.56	0.92	1.74	25.0**a**	1.6

All post-harvest evaluations and ratings were conducted at Pullman, WA in 2003–2006 using tubers from trials at Aberdeen, ID, Hermiston, OR, and Othello, WA

[a] Tuber strips (3/8″×1 1/8″) were fried at 191°C for 3.5 minutes and color was measured with a Photovolt reflectance meter within 3 minutes of removal from oil. A Photovolt reading of ≤19 is considered unacceptably dark (see note c below). Within a state, means followed by different letters differed significantly (LSD, $P<0.05$)

[b] A difference of ≥9 Photovolt units between bud and stem end constitutes non-uniform fry color. Values represent an average of actual Photovolt differences in each of three years and therefore do not relate directly to averaged stem and bud values listed in the table

[c] USDA color (0=light and 4=dark) ratings were assigned based upon Photovolt reflectance readings of the darkest ends of fries (typically stem ends); Photovolt readings ≥31=USDA 0, 25–30=USDA 1, 20–24=USDA 2, 15–19=USDA 3, ≤14=USDA 4. Data are averaged over years

[d] Reducing sugars (dry matter basis) were assayed by the dinitrophenol method of Ross (1959)

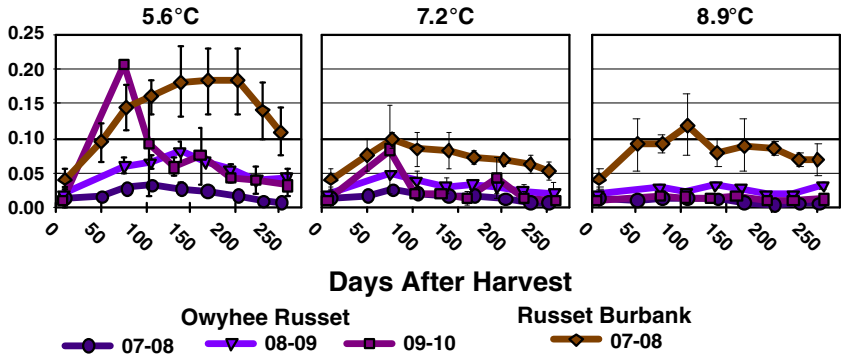

Fig. 3 Tuber glucose concentrations of Owyhee Russet relative to Russet Burbank, following 0 to 260 days of storage at 5.6°C, 7.2°C, and 8.9°C. Average of three storage seasons

(Table 7). The total glycoalkaloid levels were similar to the control variety.

Disease and Herbicide Reactions

Disease trials with Owyhee Russet and Russet Burbank were conducted in Corvallis, Oregon and Kimberly and Aberdeen, Idaho. Results show that Owyhee Russet is more resistant than Russet Burbank to dry rot and slightly more resistant to soft rot, but is more susceptible to common scab. These and other fungal caused diseases as well as oomycete and viral caused diseases are listed in Table 8.

Bacterial Common scab **(***Streptomyces scabies***)** trials were conducted at Aberdeen, Idaho utilizing naturally occurring field inoculum and were rated visually for scab incidence, lesion type, and surface area covered. The incidence of serious defects was calculated from the number of tubers with a lesion type rating of 3 or higher representing lesions that were ≥0.6 cm and were raised or pitted (0–5 scale where 0=no lesions). Owyhee Russet is slightly, but not significantly, more susceptible to common scab when lesion type is compared to Russet Burbank and Owyhee is moderately resistant to serious scab.

Soft rot trials were done with tubers collected from replicated field plots. These tubers were washed and wounded by tumbling them in a rotating drum lined with a thinly padded (0.6 cm) medium abrasive cloth. They were then inoculated with *Pectobacterium atrosepticum* by dipping them in a diluted solution at 6×10^4 cells/ml. The tubers were then put into a 10°C storage for one week, then rehydrated *by* submersing in water for 5 min, and then placed in a mist chamber with 100% RH at 20–22°C for approximately one week after which they were evaluated based on the amount of rot present. Owyhee Russet appears to have a slightly higher resistance to soft rot compared to Russet Burbank, although the difference is not significant and both are considered susceptible to soft rot (Table 8).

Table 5 Mean post-harvest ratings of Owyhee Russet, Ranger Russet, and Russet Burbank in full-season studies included in the 2003–2006 Western Regional Potato Variety Trials

	Washington	Idaho	Oregon	3 state mean
Owyhee Russet	30.7	29.1	26.1	28.6
Ranger Russet	24.0	27.3	16.9	22.7
Russet Burbank	21.9	19.8	12.8	18.1

Post-harvest evaluations and ratings were conducted at Pullman, WA using tubers from trials at Aberdeen, ID, Hermiston, OR, and Othello, WA. Values were assigned based on the sum of individual ratings for fry color from the field, and after storage at 8.9 and 6.7°C (59 days; 0–5 scale), reducing sugar concentrations following 59 days storage at 8.9 and 6.7°C (1–5 scale), specific gravity (0–5 scale), and average sensory evaluations by taste panels (1–5 scale). The post-harvest ratings indicated above are out of the highest possible value of 38. Higher values are indicative of superior post-harvest attributes

Table 6 Internal and external tuber defects for Owyhee Russet and Russet Burbank

Defects[a]	Owyhee Russet	Russet Burbank
Growth cracks[b]	4.9	4.2
Second growth[b]	4.8	2.8
Shatter bruise[b,c]	4.4	4.6
Blackspot bruise[b,c]	5.0	7.0
Hollow heart/Brown center[d]	0.7	6.5
Internal brown spot[d]	2.7	9.2
Vascular discoloration[d,e]	11.7	5.5

[a] Data taken from Oregon statewide, Tri-State and Western Regional trials conducted from 2001 to 2004

[b] Rated using 1–5 scale where 1=severe occurrence of the defect and 5=no occurrence of the defect

[c] Rating obtained following controlled bruising evaluations conducted in laboratory

[d] Rated as the percentage of tubers with hollow heart, internal brown spot and vascular discoloration

[e] LSD (0.05%) not significantly different

Table 7 Biochemical composition of Owyhee Russet and Russet Burbank tubers. Data were taken from 2004–2006 Aberdeen, Idaho trials[a]

Component	Owyhee Russet	Russet Burbank
Solids (%)	21.73	20.20
Glucose[c] (% FWB) [b]	0.08	0.11
Sucrose[c] (% FWB)[b]	0.15	0.16
Protein [d](% DWB) [a]	6.20	5.00
Vitamin C[e] (mg/100 g)	24.70	23.20
Glycoalkaloids[f] (mg/100 g)	3.10	3.10

[a] Analyses were conducted on freeze-dried tuber tissue at Aberdeen, ID; tissue was taken from tubers stored at 7.2°C for six weeks following their harvest

[b] FWB=Fresh Weight Basis; DWB=Dry Weight Basis; Sucrose and glucose values of 0.15% and 0.10% respectively are maximum values for acceptable fry color in this evaluation, with glucose being the greater contributor to fry color

[c] Sugar concentrations were calculated according to glucose and sucrose measurements in potatoes, Application Note No. 102, Scientific Division, Yellow Springs Instrument Co., Yellow Springs, Ohio 45387(Ross 1959)

[d] Protein content was determined using a Coomassie blue protein assay developed from the protocol of Bradford (1976)

[e] Vitamin C (ascorbic acid) content in tubers was determined using a microfluorometric method detailed in the Official Methods of Analysis Handbook, Horowitz, W. (Ed.). (2000)

[f] Total glycoalkaloids was determined using the protocol of Bergers (1980)

Fungal Verticillium wilt trials were conducted at Aberdeen, Idaho utilizing naturally occurring inocula and visual foliage ratings (Corsini et al. 1988). Early blight *(Alternaria solani)* trials were conducted at Aberdeen utilizing naturally occurring inocula and visual estimates were made of the leaf area with typical lesions.

Dry rot evaluations were done at Aberdeen, Idaho with washed tubers collected from replicated field trials. Dry rot inocula from cultures of field collected isolates of *Fusarium sambucinum* and *F. solani* var. *coeruleum* were used to infect tubers by penetrating the skin to a depth of 0.6 cm with the pins of a "wounding" tool initially dipped into a solution with 1.7×10^5 conidia/ml. This tool is then used to inoculate one end of the tuber with *F. sambucinum* and the other end is inoculated with *F.s.*var. *coeruleum* in a similar manner. Before and after inoculation, the tubers are kept in 10°C storage. Tubers were then cut and evaluated for dry rot approximately four weeks post-inoculation. Two year averages indicate that compared with Russet Burbank, Owyhee Russet is significantly more resistant to dry rot. In Owyhee Russet, the level of dry rot caused by *F.s.* var. *coeruleum* is noticeably lower compared to Russet Burbank and is rated as moderatey resistant, while the rate of dry rot caused by *F. sambucinum* is also lower, but matches the rate considered susceptible for Russet Burbank. Both species of Fusarium were predominant in Columbia Basin of Washington and Oregon storage surveys in 2000 and 2001 (Ocamb et al. 2007), while *F. sambucinum* was predominant in Idaho storages in 1986 (Corsini and Pavek 1986).

Oomycete Late blight evaluations were conducted at Corvallis, Oregon in 2006 by providing *Phytophthora infestans* inoculum in favorable conditions for disease development according to methods outlined in Mosley et al. 2003. Foliar and tuber disease readings taken from these replicated plots indicate that Owyhee Russet is susceptible to late blight at the same level of Russet Burbank for both foliar and tuber rot responses (Table 8).

Virus Trials for virus susceptibility using five hills per plot with three replications were conducted at Kimberly, Idaho in 2006. Heavy virus pressure was created by mechanically inoculating PVX and PVY and by placement of green peach aphids (*Myzus persicae*) in PLRV infected spreader rows to allow aphid transmission of both PLRV and PVY as described by Corsini et al. (1994). At harvest, ten tubers were collected from each plot and grown out in a greenhouse. Samples collected from these greenhouse plants were serologically tested (ELISA) for PVX, PVY, and PLRV to give virus incidence. Owyhee Russet was susceptible to all three viruses, but at a lower, but not significantly different rate for PLRV compared to Russet Burbank. Typical mosaic symptoms were easily observed in the greenhouse during the post harvest grow-out indicating that symptoms should be visible from seed borne infections. Owyhee Russet was not tested against individual strains of PVY. Inoculum used in the 2006 trial was from field collected isolates.

Herbicide Metribuzin is a commonly used herbicide on potato and Owyhee Russet is susceptible to metribuzin herbicide injury (Table 8). Thus, herbicides other than metribuzin should be used for weed control in Owyhee Russet fields.

Management

Owyhee Russet has been tested in replicated trials at more than nine locations in the Northwest for more than five years using standard management practices for Russet Burbank, Ranger Russet and Russet Norkotah. Owyhee Russet production could be optimized by conducting more production research. A seed spacing trial conducted at Klamath Falls, OR showed that 15 cm spacing between plants resulted in the highest yields and the highest percent No.1 when managed for seed production. Owyhee Russet is a variety with medium length dormancy, overall about 30 days shorter than Russet Burbank. Two year averages indicate that, Owyhee Russet has a dormancy of 95 days at 8.9°C, 110 days at 7.2°C and 145 days at 5.6°C.

Table 8 Disease reactions of Owyhee Russet and Russet Burbank in trials conducted in Idaho and Oregon

Disease[a]	Factor or type	Owyhee Russet		Russet Burbank		
		Reading	Rating[b]	Reading	Rating	
Verticillium wilt[c]		7.0	S	6.8	S	ns[i]
Early blight[c]	foliar	5.5	S	4.2	S	ns
Soft rot[c]		2.7	S	3.6	S	ns
Dry rot:[c]	*F. sol.* var. *coeruleum*	1.6	MR	3.7	S	**
	F. sambucinum	3.7	S	4.8	S	**
Common scab:[c,d]	lesion type	3.0	MS	2.0	MR	ns
	% serious defect	9.8	MR	3.7	R	*
Virus:[e] (%)	PVY	96.7	S	96.7	S	ns
	PVX	100.0	VS	100.0	VS	ns
	PLRV	71.7	S	100.0	VS	ns
Late blight:	foliar[c]	8.0	S	8.0	S	ns
	tuber[f] (%)	17.5	S	15.0	S	ns
	AUDPC[g]	978.4	S	987.7	S	ns
Metribuzin[h]			S		VR	

[a] Data collected from trials grown in Aberdeen and Kimberly, Idaho, and Corvallis and Hermiston, OR (not all trials conducted at each location)

[b] R=resistant, MR=moderately resistant, S=susceptible, VS=very susceptible

[c] Scales: 1–9 for Verticillium wilt, Early blight and Late blight; 0–5 for soft rot, dry rot and common scab with highest number in both scales equaling most severe symptoms

[d] Common scab evaluations from Aberdeen, Idaho, 2005–2006. Serious defect defined as % of tubers with a 3 or higher reading with 3=scab lesions that are ≥0.6 cm or pitted

[e] Based on ELISA readings from plants grown from daughter tubers collected at harvest from current season infected plants in 2006

[f] Percentage of tubers with late blight symptoms, evaluated at Corvallis, OR in 2006

[g] AUDPC=Area Under Disease Progress Curve

[h] Herbicide evaluations made at Aberdeen, ID, in 2004–2006

[i] Paired Student t-Test results for in-row comparisons for each disease; $^{**}p \leq 0.01$ very significant, $^{*}p \leq 0.05$ significant, ns-not significant

Genetic Fingerprinting

SSR (Simple Sequence Repeat) Analysis**:** Five SSR markers (Karaagac et al. 2010) have been used for DNA fingerprinting of Owyhee Russet, Ranger Russet, Russet Burbank and Russet Norkotah. Genomic DNA was obtained using the DNeasy 96 Plant Kit (Qiagen). Each SSR forward primer was modified with a 5′ M13 extension. An additional M13 forward primer was labelled with the fluorescent infrared dye IRD700 or 800 (LI-COR Biosciences, Lincoln, Nebraska, USA). PCR was performed in a volume of 20 μL containing 15 ng of template DNA, 1X PCR Buffer (Fermentas, Glen Burnie, MD), 200 μM dNTPs, 30 pM of 700 or 800 IRDye-labeled M13 forward primer (LI-COR Inc, Lincoln, NE) and 30 pM reverse primer, 20 pM forward SSR primer and 0.05 U/μL Taq DNA polymerase (Fermentas, Glen Burnie, MD). Cycling conditions were 94°C 50 s, Ta (specific for each SSR marker) for 1 m, 72°C 50 s for 31 cycles. PCR products were separated by electrophoresis on a 6.5% denaturing polyacrylamide gel with a 4300 LI-COR DNA Analyzer system. SSR alleles were detected and scored using SAGA Generation 2 software (LI-COR).

Allelic patterns of five SSR markers have showed that Owyhee Russet has different DNA fingerprint from its russet type reference varieties which are Ranger Russet, Russet Burbank and Russet Norkotah (Fig. 4). Out of 18 alleles obtained with 5 SSR markers, Owyhee Russet shares 9 alleles with Ranger Russet and 8 alleles with Russet Burbank and Russet Norkotah. Owyhee Russet has STI001-177 bp, STM1104-165 bp, and STM0003-145 bp alleles, which are not present in the reference varieties.

Protection, Seed Availability and Licensing

Plant Variety Protection (PVP) has been requested for ‘Owyhee Russet’. Disease-free pre-nuclear plantlets and mini-tubers are available from the University of Idaho Tissue Culture Laboratory. Based on an agreement between OSU, the Oregon Potato Commission, and the Potato Variety

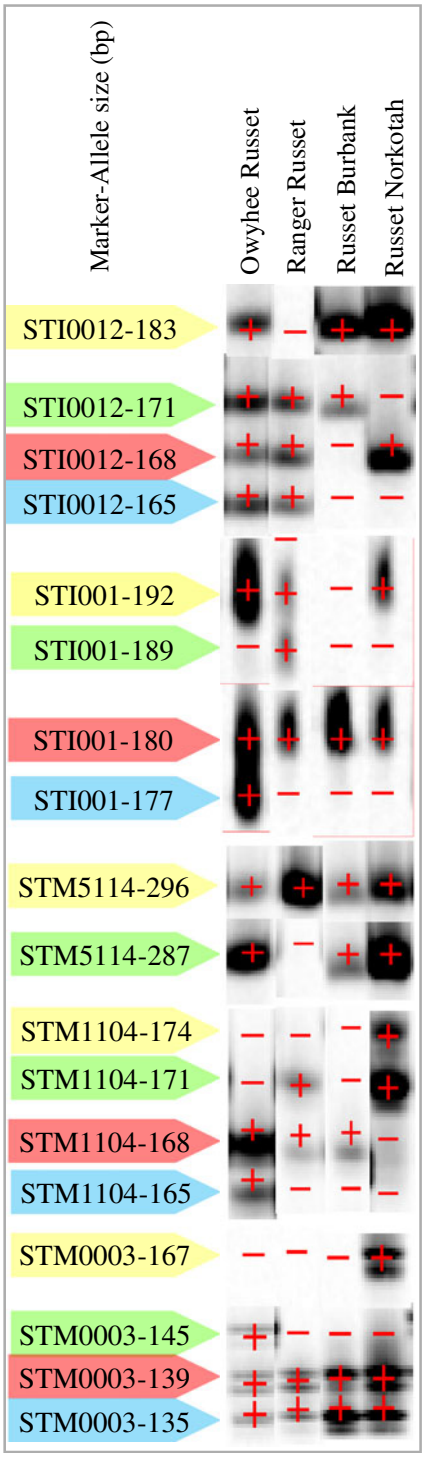

Fig. 4 DNA fingerprinting patterns of Owyhee Russet with the reference varieties Ranger Russet, Russet Burbank and Russet Norkotah screening of SSR markers STI0012, STI001, STM5114, STM1104 and STM0003 with their allele size (base pair)

Management Institute (PVMI), 'Owyhee Russet' has been licensed to PVMI (Potato Variety Management Institute, www.pvmi.org), a non-profit organization working on behalf of the Tri-State Potato Breeding Program.

Acknowledgements The authors thank Jenny Reed, Robert Smith, Lori Ewing, Margaret Bain, Nora Fuller, Zach Holden, and Brian Schneider for their contributions to the development and release of Owyhee Russet. We also thank our industry cooperators, our collaborators in the Western Regional Potato Variety Trials, and the Idaho, Washington, and Oregon potato commissions. The Oregon Agricultural Experiment Station, the Oregon Potato Commission, the Potato Variety Management Institute (PVMI), the USDA Cooperative State Research, Education, and Extension Service, and the USDA Agricultural Research Service provided partial financial support for this research.

References

Bergers, W.W. 1980. A rapid quantitative assay for solanidine glycoalkaloids in potatoes and industrial potato protein. *Potato Research* 23: 105–110.

Bradford, N.M. 1976. A rapid and sensitive method for the quantitation of microgram quantities of protein using the principle of protein dye binding. *Analytical Biochemistry* 72: 248–254.

Corsini, D., and J. Pavek. 1986. Fusarium dry-rot resistant potato germplasm. *American Journal of Potato Research* 63: 629–638.

Corsini, D.L., J.J. Pavek, and J.R. Davis. 1988. Verticillium wilt resistance in non-cultivated tuber-384 bearing *Solanum* species. *Plant Disease* 75: 148–151.

Corsini, D.L., J.J. Pavek, M.W. Martin, and C.R. Brown. 1994. Potato germplasm with combined resistance to leafroll virus and viruses X and Y. *American Potato Journal* 71: 377–386.

Horowitz, W. (ed.). 2000. *AOAC official methods of analysis. (17th ed., sects. 50.1.09 (985.33), and 45.1.15 (967.22)*. Gaithersburg, MD: Association of Official Analytical Chemists International.

Karaagac, E., S. Yilma, and M.I. Vales. 2010. SSR-Based DNA Fingerprinting of Potato Clones from the Pacific Northwest Potato Variety Development Program. *ISHS Acta Horticulturae* 859: 121–127.

Mosley, A., S. Yilma, D. Hane, S. James, K. Rykbost, , C. Shock, B. Charlton, E. Eldredge, and L. Leroux. 2003. In *National Potato Germplasm Evaluation and Enhancement Report*, eds. K.G. Haynes & Haynes) pp. 369–388. Oregon

Ocamb, C.M., P.B. Hamm, and D.A. Johnson. 2007. Benzimidazole resistance of Fusarium species recovered from potatoes with dry rot from storages located in the Columbia Basin of Oregon and Washington. *American Journal of Potato Research* 84: 169–177.

Pavek, J.J., D.L. Corsini, J.G. Garner, S. Michener, W.C. Sparks, G.F. Carnahan, C.E. Stanger, A.R. Mosley, M.J. Johnson, G.E. Carter, R.E. Voss, M.W. Martin, and R.H. Johansen. 1981. Lemhi Russet: A new, high yielding potato variety with wide adaptation, attractive tubers, and high internal quality. *Am Potato J* 58: 619–625.

Ross, F.A. 1959. Dinitrophenol methods for reducing sugars. In *Potato Processing*, eds. W.F. Talburt and O. Smith, 469–470. Connecticut: A VI Publishing Comp.