University of Nebraska - Lincoln
DigitalCommons@University of Nebraska - Lincoln

Nebraska Tractor Tests | Tractor Test and Power Museum, The Lester F. Larsen

1-1-2007

Test 1911: Case-IH Steiger 530 and 535 Quadtrac Diesel 16-Speed Also Case-IH STX 530 Quadtrac Diesel 16-Speed

Tractor Museum
University of Nebraska-Lincoln, TractorMuseumArchives@unl.edu

Follow this and additional works at: http://digitalcommons.unl.edu/tractormuseumlit

Part of the Applied Mechanics Commons

Museum, Tractor, "Test 1911: Case-IH Steiger 530 and 535 Quadtrac Diesel 16-Speed Also Case-IH STX 530 Quadtrac Diesel 16-Speed" (2007). *Nebraska Tractor Tests.* Paper 2089.
http://digitalcommons.unl.edu/tractormuseumlit/2089

This Article is brought to you for free and open access by the Tractor Test and Power Museum, The Lester F. Larsen at DigitalCommons@University of Nebraska - Lincoln. It has been accepted for inclusion in Nebraska Tractor Tests by an authorized administrator of DigitalCommons@University of Nebraska - Lincoln.

NEBRASKA OECD TRACTOR TEST 1911 - SUMMARY 579
CASE IH STEIGER 530 QUADTRAC DIESEL
ALSO CASE IH STX 530 QUADTRAC DIESEL
ALSO CASE IH STEIGER 535 QUADTRAC DIESEL
16 SPEED

POWER TAKE-OFF PERFORMANCE

Power HP *(kW)*	Crank shaft speed rpm	Gal/hr *(l/h)*	lb/hp.hr *(kg/kW.h)*	Hp.hr/gal *(kW.h/l)*	Mean Atmospheric Conditions
MAXIMUM POWER AND FUEL CONSUMPTION					
Rated engine speed—(PTO speed—1051 rpm)					
473.65 *(353.20)*	2100	27.65 *(104.68)*	0.409 *(0.249)*	17.13 *(3.37)*	
Standard power take-off speed (1000 rpm)					
501.68 *(374.11)*	1997	28.16 *(106.59)*	0.393 *(0.239)*	17.82 *(3.51)*	
Maximum power (1 Hour)					
534.72 *(398.74)*	1800	29.27 *(110.80)*	0.383 *(0.233)*	18.27 *(3.60)*	
VARYING POWER AND FUEL CONSUMPTION					
473.65 *(353.20)*	2100	27.65 *(104.68)*	0.409 *(0.249)*	17.13 *(3.37)*	Air temperature
85% load level not run due to vibration					79°F *(26°C)*
309.26 *(230.62)*	2152	21.44 *(81.17)*	0.485 *(0.295)*	14.42 *(2.84)*	Relative humidity
205.62 *(153.33)*	2151	16.59 *(62.78)*	0.565 *(0.343)*	12.40 *(2.44)*	40%
103.84 *(77.43)*	2173	9.83 *(37.21)*	0.663 *(0.403)*	10.56 *(2.08)*	Barometer
2.02 *(1.51)*	2176	5.37 *(20.33)*	18.582 *(11.303)*	0.38 *(0.07)*	28.61" Hg *(96.88 kPa)*

Maximum torque - 1760 lb.-ft. *(2387 Nm)* at 1406 rpm
Maximum torque rise - 48.4%
Torque rise at 1701 engine rpm - 36%
Power increase at 1800 engine rpm - 12.9%

DRAWBAR PERFORMANCE
FUEL CONSUMPTION CHARACTERISTICS

Power Hp *(kW)*	Drawbar pull lbs *(kN)*	Speed mph *(km/h)*	Crank-shaft speed rpm	Slip %	Fuel Consumption lb/hp.hr *(kg/kW.h)*	Hp.hr/gal *(kW.h/l)*	Temp.°F *(°C)* cool-ing med	Air dry bulb	Barom. inch Hg *(kPa)*
Maximum Power—4th Gear									
406.28 *(302.96)*	32520 *(144.66)*	4.68 *(7.54)*	2101	3.7	0.468 *(0.285)*	14.98 *(2.95)*	184 *(84)*	52 *(11)*	28.92 *(97.93)*
75% of Pull at Maximum Power—4th Gear									
315.09 *(234.96)*	24378 *(108.44)*	4.85 *(7.80)*	2138	2.2	0.521 *(0.317)*	13.47 *(2.65)*	183 *(84)*	70 *(21)*	28.90 *(97.87)*
50% of Pull at Maximum Power—4th Gear									
212.79 *(158.68)*	16229 *(72.19)*	4.92 *(7.91)*	2146	1.1	0.631 *(0.384)*	11.12 *(2.19)*	181 *(83)*	72 *(22)*	28.90 *(97.87)*
75% of Pull at Reduced Engine Speed—7th Gear									
314.55 *(234.56)*	24406 *(108.56)*	4.83 *(7.78)*	1541	2.1	0.490 *(0.298)*	14.31 *(2.82)*	188 *(87)*	71 *(22)*	28.90 *(97.87)*
50% of Pull at Reduced Engine Speed—7th Gear									
214.46 *(159.92)*	16290 *(72.46)*	4.94 *(7.95)*	1557	1.1	0.531 *(0.323)*	13.20 *(2.60)*	189 *(87)*	73 *(23)*	28.89 *(97.83)*

Location of tests: Nebraska Tractor Test Laboratory, University of Nebraska, Lincoln Nebraska 68583-0832
Dates of tests: October 2 - 24, 2007

Manufacturer: Case Corporation, 700 State Street Racine, Wi. 53404 USA.

FUEL, OIL and TIME: Fuel No. 2 Diesel **Specific gravity converted to 60°/60° F *(15°/15°C)*** 0.8407 **Fuel weight** 7.000 lbs/gal *(0.839 kg/l)* **Oil SAE** 15W40 **API service classification** CI-4 **Transmission and hydraulic lubricant** Akcela Hy-Tran Ultra fluid **Front and rear axle lubricant** Akcela Hy-Tran Ultra fluid **Total time engine was operated** 17.0 hours

ENGINE: Make Cummins Diesel **Type** six cylinder vertical with turbocharger and air to air aftercooler **Serial No.** 79234480 **Crankshaft** lengthwise **Rated engine speed** 2100 **Bore and stroke** 5.394" x 6.654" *(137.0 mm x 169.0 mm)* **Compression ratio** 17.0 to 1 **Displacement** 912 cu in *(14945 ml)* **Starting system** 24 volt **Lubrication** pressure **Air cleaner** two paper elements and aspirator **Oil filter** one full flow cartridge **Oil cooler** engine coolant heat exchanger for crankcase oil, radiator for transmission and hydraulic oil **Fuel filter** one paper element **Fuel cooler** radiator for returned fuel **Muffler** vertical **Cooling medium temperature control** one thermostat and variable speed fan

ENGINE OPERATING PARAMETERS: Fuel rate: 185.1 - 196.5 lb/h *(84.0 - 89.1 kg/h)* **High idle:** 2160 - 2200 rpm **Turbo boost:** nominal 26.8 - 29.0 psi *(185 - 200 kPa)* as measured 27.9 psi *(192 kPa)*

CHASSIS: Type Tracklayer - rubber tracked **Serial No.** *Z7F105596* **Track width** rear 88.0" *(2235 mm)* front 88.0"*(2235 mm)* **Trackbase** 154.0" *(3912 mm)* **Length of track on ground** 29.4"*(748 mm)* **Hydraulic control system** direct engine drive **Transmission** selective gear fixed ratio with full range operator controlled powershift **Nominal travel speeds mph *(km/h)*** first 2.78 *(4.47)* second 3.34 *(5.38)* third 4.04 *(6.50)* fourth 4.87 *(7.83)* fifth 5.59 *(8.99)* sixth 6.14 *(9.88)* seventh 6.73 *(10.83)* eighth 7.39 *(11.90)* ninth 8.13 *(13.08)* tenth 8.93 *(14.37)* eleventh 9.79 *(15.76)* twelfth 10.76 *(17.32)* thirteenth 12.35 *(19.88)* fourteenth 14.88 *(23.94)* fifteenth 17.98 *(28.93)* sixteenth 21.64 *(34.82)* reverse 4.21 *(6.77)*, 9.30 *(14.97)* **Clutch** multiple wet disc electro-hydraulically operated by foot pedal **Brakes** single wet disc hydraulically actuated by foot pedal **Steering** hydrostatic and articulated **Power take-off** 1000 rpm at 1998 engine rpm **Unladen tractor mass** 52410 lb *(23773 kg)*

DRAWBAR PERFORMANCE

MAXIMUM POWER IN SELECTED GEARS

Power Hp *(kW)*	Drawbar pull lbs *(kN)*	Speed mph *(km/h)*	Crank-shaft speed rpm	Slip %	Fuel Consumption lb/hp.hr *(kg/kW.h)*	Hp.hr/gal *(kW.h/l)*	Temp.°F*(°C)* cool-ing med	Air dry bulb	Barom. inch Hg *(kPa)*
					3rd Gear				
414.01 *(308.73)*	50065 *(222.70)*	3.10 *(4.99)*	1830	12.2	0.477 *(0.290)*	14.72 *(2.90)*	184 *(84)*	48 *(9)*	28.92 *(97.93)*
					4th Gear				
443.18 *(330.48)*	42750 *(190.16)*	3.89 *(6.26)*	1804	7.1	0.448 *(0.272)*	15.66 *(3.08)*	185 *(85)*	54 *(12)*	28.92 *(97.93)*
					5th Gear				
452.92 *(337.74)*	37220 *(165.56)*	4.56 *(7.34)*	1805	5.0	0.432 *(0.263)*	16.23 *(3.20)*	184 *(84)*	56 *(13)*	28.92 *(97.93)*
					6th Gear				
455.79 *(339.88)*	33807 *(150.38)*	5.06 *(8.14)*	1801	4.1	0.437 *(0.266)*	16.05 *(3.16)*	185 *(85)*	59 *(15)*	28.91 *(97.90)*
					7th Gear				
452.01 *(337.06)*	30255 *(134.58)*	5.60 *(9.02)*	1806	3.3	0.449 *(0.273)*	15.62 *(3.08)*	184 *(84)*	60 *(16)*	28.91 *(97.90)*
					8th Gear				
454.57 *(338.97)*	27593 *(122.74)*	6.18 *(9.94)*	1802	2.8	0.443 *(0.269)*	15.84 *(3.12)*	184 *(84)*	66 *(19)*	28.91 *(97.90)*
					9th Gear				
451.81 *(336.91)*	24844 *(110.51)*	6.82 *(10.98)*	1800	2.1	0.452 *(0.275)*	15.52 *(3.06)*	183 *(84)*	67 *(19)*	28.91 *(97.90)*
					10th Gear				
451.23 *(336.48)*	22488 *(100.03)*	7.52 *(12.11)*	1800	1.7	0.452 *(0.275)*	15.52 *(3.06)*	184 *(84)*	68 *(20)*	28.90 *(97.87)*
					11th Gear				
444.15 *(331.20)*	20117 *(89.48)*	8.28 *(13.32)*	1801	1.4	0.458 *(0.278)*	15.32 *(3.02)*	184 *(84)*	69 *(21)*	28.90 *(97.87)*

TRACTOR SOUND LEVEL WITH DELUXE CAB	dB(A)
At no load in 4th gear	74.0
Bystander in 16th Gear	92.5

TIRES, BALLAST AND WEIGHT	Tested without ballast
Rear tracks - no & size	2 x 30.0 in *(762 mm)*
Front tracks - no & size	2 x 30.0 in *(762 mm)*
Height of drawbar	19.0 in *(485 mm)*
Static weight with operator- Rear	22670 lb *(10283 kg)*
- Front	29915 lb *(13569 kg)*
- Total	52585 lb *(23852 kg)*

REPAIRS AND ADJUSTMENTS: No repairs or adjustments.

REMARKS: All test results were determined from observed data obtained in accordance with official OECD, SAE and Nebraska test procedures. For the maximum power tests, the fuel temperature at the injection pump inlet was maintained at 108°F *(42°C)*. The manufacturer's Cab sound level claim of 75 dB(A), with Luxury cab, was not verified. The performance figures on this Summary were taken from a test conducted under the OECD Code II test procedure.

We, the undersigned, certify that this is a true and correct report of official Tractor Test No. **1911**, Nebraska Summary 579, February 8, 2008.

Roger M. Hoy
Director

M.F. Kocher
R.E Yoder
J.A. Smith
Board of Tractor Test Engineers

THREE POINT HITCH PERFORMANCE (OECD Static Test)

CATEGORY: IVN
Quick Attach: yes
Maximum force exerted through whole range: 19728 lbs *(87.8 kN)*

	Standard pump	High flow pump
i) Sustained pressure of the open relief valve:	3040 psi *(210 bar)*	3036 psi *(209 bar)*
ii) Pump delivery rate at minimum pressure and rated engine speed:	42.6 GPM *(161.3 l/min)*	59.3 GPM *(224.5 l/min)*
iii) Pump delivery rate at maximum hydraulic power:	NA	55.6 GPM *(210.5 l/min)*
Delivery pressure:	NA	2658 psi *(183 bar)*
Power:	NA	86.2 Hp *(64.3 kW)*

TwinFlow system

	Main pump	TwinFlow pump
i) Sustained pressure at compensator cutoff:	3021 psi *(208 bar)*	3031 psi *(209 bar)*
ii) Pump delivery rate at minimum pressure and rated engine speed:	58.9 GPM *(222.8 l/min)*	39.6 GPM *(150.0 l/min)*
Combined flow:	98.5 GPM *(372.8 l/min)*	
iii) Pump delivery rate at maximum hydraulic power:	57.2 GPM *(216.3 l/min)*	37.1 GPM *(140.6 l/min)*
Delivery pressure:	2345 psi *(162 bar)*	2832 psi *(195 bar)*
Power:	78.2 HP *(58.3 kW)*	61.3 Hp *(45.7 kW)*

HITCH DIMENSIONS AS TESTED - NO LOAD

	inch	*mm*
A	32.6	*827*
B	29.9	*760*
C	23.2	*590*
D	22.0	*558*
E	13.5	*342*
F	13.4	*340*
G	35.0	*890*
*G'	11.8	*300*
H	4.6	*117*
I	22.8	*578*
J	21.6	*550*
K	29.0	*736*
L	56.3	*1431*
*L'	63.6	*1615*
M	34.3	*871*
N	46.5	*1181*
O	7.9	*200*
P	45.4	*1154*
Q	40.9	*1039*
R	38.5	*978*

*G' to undercarriage pivot point
*L' to Quick coupler ends

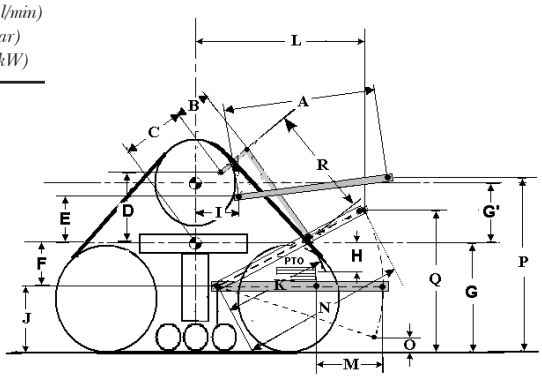

Case IH Steiger 530 Quadtrac Diesel

Institute of Agriculture and Natural Resources
University of Nebraska–Lincoln