University of Nebraska - Lincoln

DigitalCommons@University of Nebraska - Lincoln

Chemical & Biomolecular Engineering Theses, Dissertations, & Student Research

Chemical and Biomolecular Engineering, Department of

Fall 10-23-2012

Optimization of Biodiesel Production Plants

Nghi T. Nguyen
University of Nebraska-Lincoln, nghinguyen1985@yahoo.com

Follow this and additional works at: https://digitalcommons.unl.edu/chemengtheses

Part of the Catalysis and Reaction Engineering Commons, and the Thermodynamics Commons

Nguyen, Nghi T., "Optimization of Biodiesel Production Plants" (2012). *Chemical & Biomolecular Engineering Theses, Dissertations, & Student Research*. 15.
https://digitalcommons.unl.edu/chemengtheses/15

This Article is brought to you for free and open access by the Chemical and Biomolecular Engineering, Department of at DigitalCommons@University of Nebraska - Lincoln. It has been accepted for inclusion in Chemical & Biomolecular Engineering Theses, Dissertations, & Student Research by an authorized administrator of DigitalCommons@University of Nebraska - Lincoln.

OPTIMIZATION OF BIODIESEL PRODUCTION PLANTS

By

Nghi Nguyen

A DISSERTATION

Presented to the Faculty of

The Graduate College at the University of Nebraska

In Partial Fulfillment of Requirements

For the Degree of Doctor of Philosophy

Major: Engineering

(Chemical and Biomolecular Engineering)

Under the Supervision of Professor Yasar Demirel

Lincoln, Nebraska

December, 2012

OPTIMIZATION OF BIODIESEL PRODUCTION PLANTS

Nghi Nguyen, Ph.D.

University of Nebraska, 2012

Advisor: Yasar Demirel

A conventional biodiesel plant utilizing two distillation columns to purify unreacted reactants and products is considered in this study. Thermodynamic analyses are used to assess the performance of the existing distillation columns, and reduce the costs of operation by appropriate retrofits in a biodiesel production plant. After the retrofits, the overall exergy loss for the two columns has decreased from 2430.87 kW to 1674.12 kW.

A reactive distillation is developed for esterification of lauric acid with methanol using equilibrium and nonequilibrium models. Equilibrium modeling dominated during last few decades due to their straightforward mathematical modeling. In reality, separation depends on the heat and mass transfer rates between liquid and vapor phases and a more sophisticated nonequilibrium modeling is more suitable to describe the separation process. Further, thermally coupled side-stripper reactive distillation sequence is used to reduce the overall energy consumption of the reactive distillation column and the methanol recovery column of the equilibrium design. The total exergy losses for the columns are reduced by 281.35 kW corresponding to 21.7% available energy saving.

In order to design a new generation biodiesel plant, direct carboxylation and glycerolysis routes are developed to convert a by-product, glycerol, of the biodiesel production plant into a value-added product, glycerol carbonate, to reduce the unit cost of the biodiesel production plant. A direct comparison of the economic analysis based on

deterministic and stochastic models of the conventional biodiesel plant, biodiesel-glycerol carbonate production by direct carboxylation plant and biodiesel-glycerol carbonate production by glycerolysis plant is presented. The results show that either route can be used to reduce the unit cost of the biodiesel production plant.

ACKNOWLEDGEMENTS

I would like to express my deep appreciation and gratitude to my advisor, Dr. Yasar Demirel, for his guidance and support during my doctorate's study. Also, I would like to express my special thanks to the committee members, Dr. Hossein Noureddini, Dr. Delmar C. Timm, Dr. William H. Velander and Dr. Deepak Keshwani for their valuable time.

TABLE OF CONTENTS

LIST OF TABLES……..vi

LIST OF FIGURES…….x

CHAPTER 1: Introduction Chapter…….…..…..1

1.1 Introduction…….…….…..1

1.2 Feedstocks……..1

1.2.1 Current Feedstocks……..1

1.2.2 Potential Future Feedstocks……3

1.3 Biodiesel Production Processses….……...4

1.3.1 Biodiesel Production using Triglyceride……4

1.3.1.1 Transesterification Reaction……4

1.3.1.2 Biodiesel Production by Transesterification……5

1.3.2 Biodiesel Production using Free Fatty Acid……...6

1.3.2.1 Esterification Reaction…….7

1.3.2.2 Biodiesel Production by Esterification……7

1.4 American and European Biodiesel Quality Standards (ASTM D-6751)……...8

1.5 Chemicals Used in this Study……9

1.6 Aspen Plus Simulation…….10

1.7 Objectives……11

References……..11

CHAPTER 2: Retrofit of Distillation Columns in Biodiesel Production Plants……14

2.1 Introduction…….……14

2.2 Methods and Approaches…….15

2.2.1 Simulation…….15

2.2.2 Thermodynamic Analysis (TA)…… ……...15

2.2.2.1 Column Grand Composite Curve (CGCC)……17

2.2.2.2 Exergy Loss Profiles……..20

2.2.2.3 Column NQ Curves……20

2.2.2.4 Equipartition Principle……...21

2.3 Biodiesel Production Plant……...22

2.4 Results and Discussions……...25

2.4.1 Column T101……25

2.4.2 Column T102……28

2.5 Conclusions……..32

Nomenclature…….33

References……..34

CHAPTER 3: Reactive Distillation Columns for Esterification of Lauric Acid with Methanol: Equilibrium vs. Nonequilibrium Approaches……...36

3.1 Introduction……..36

3.2 Methods and Approaches…….37

3.2.1 Simulation…….……37

3.2.2 Reactive Distillation…….…….38

3.2.2.1 Esterification of Lauric Acid Reaction……..39

3.2.3 Equilibrium Model and Nonequilibrium Model……...40

3.3. Process Description and Simulation……..…….…45

3.4 Results and Discussions……...47

3.4.1 Sensitivity Analysis Results……..53

3.5 Conclusions……..56

Nomenclature…….57

References……..59

CHAPTER 4: Using Thermally Coupled Reactive Distillation Columns in Biodiesel production……...61

4.1 Introduction……..61

4.2 Methods and Approaches…….63

4.2.1 Simulation…….63

4.2.2 Thermally Coupled Distillation Column Configurations……63

4.2.2.1 Configuration Selection…….……64

4.2.3 Thermodynamic Efficiency……..65

4.2.4 Hydraulic Analysis Profiles…….…….....66

4.3 Biodiesel Plant…….66

4.4 Results and Discussions……...70

4.4.1 Column RD101…….70

4.4.2 Column T101……74

4.5 Conclusions……..78

Nomenclature…….79

References…….....79

CHAPTER 5: A Novel Biodiesel and Glycerol Carbonate Production Plant……83

5.1 Introduction……..83

5.2 Products from Glycerol……83

5.3 Methods and Approaches…….85

5.3.1 Simulation…….85

5.3.2 Reactions……...86

5.3.2.1 Transesterification……..86

5.3.2.2 Direct Carboxylation……..87

5.4 Base Case and Novel Biodiesel Production Plants……..87

5.4.1 Base Case Biodiesel Production Plant……..87

5.4.2 Novel Biodiesel Production Plant……91

5.5 Economic Analysis……..97

5.5.1 Deterministic Model……97

5.5.2 Stochastic Model……101

5.6 Results and Discussions……105

5.7 Conclusions……109

Nomenclature……...110

References……111

CHAPTER 6: Biodiesel-glycerol Carbonate Production by Glycerolysis……....114

6.1 Introduction……114

6.2 Methods and Approaches……...116

6.2.1 Simulation……...116

6.2.2 Glycerolysis Reaction……116

6.3 Direct Carboxylation Plant……117

6.4 Glycerolysis Plant……..117

6.5 Economic Analysis……122

6.5.1 Deterministic Model……...122

6.5.2 Stochastic Model……126

6.6 Results and Discussions……126

6.7 Conclusions……129

References……130

CHAPTER 7: Comments, Limitations, Conclusions and Recommendations……..132

7.1 Comments……..132

7.2 Limitations…….132

7.3 Conclusions……133

7.4 Recommendations……..134

References……134

APPENDIX A: Chemical Properties……...A-1

APPENDIX B: Retrofitted Design……...A-6

APPENDIX C: Rate-Based Distillation…….A-26

APPENDIX D: Thermally Coupled Design……..A-40

APPENDIX F: Biodiesel-Glycerol Carbonate Production Plant……....A-58

APPENDIX F: Biodiesel-Glycerol Carbonate Production by Glycerolysis……...A-82

LIST OF TABLES

Table 1-1. Free fatty acid content in biodiesel feedstocks……..2

Table 1-2. Fatty acid composition of food grade soybean oil, crude soybean oil, crude palm oil, waste cooking oil, crude corn oil from DDGs, crude algae oil and crude coconut oil……..3

Table 1-3. Composition of crude glycerol samples from different manufacturers……6

Table 1-4. Chemicals used in this study……..9

Table 2-1. Streams properties of the base case design……..……24

Table 2-2. Streams properties of the retrofitted design……25

Table 2-3. Comparison of operating conditions and configurations of designs 1 and 2 for distillation column T101……26

Table 2-4. Comparison of operating conditions and configurations of designs 1 and 2 for distillation column T102……28

Table 2-5. Column T102 design specifications and NQ curves……29

Table 3-1. Reaction kinetic input summary of reactive distillation column RD101…….46

Table 3-2. Comparison of operating conditions and configurations of equilibrium and nonequilibrium designs for reactive distillation column RD101……..……..48

Table 3-3. How to activate rate-based calculations in Aspen Plus……...49

Table 3-4. Sensitivity analysis input summary of side heater duty……...55

Table 4-1. Streams properties of the base case design (Fig. 4-3a)……69

Table 4-2. Stream properties of the thermally coupled design (Fig. 4-3b)……...69

Table 4-3. Comparison of operating conditions and configurations of reactive distillation column RD101 and distillation column T101 of base case and thermally coupled designs……..71

Table 4-4. Column T101 design specification input summary……74

Table 4-5. Some of the streams properties for the base case and thermally coupled designs given in Fig. 4-3……..78

Table 4-6. Minimum exergy of separation and thermodynamic efficiency estimations based on the converged simulation……78

Table 5-1. Main processes that use glycerol as raw material…….…...84

Table 5-2. Streams properties of the base case biodiesel production plant shown in Fig. 5-1……...89

Table 5-3. Drum F101 design specification input summary…….……90

Table 5-4. Streams properties of the novel biodiesel production plant (Section 1) shown in Fig. 5-3b…….93

Table 5-5. Streams properties of the glycerol carbonate production plant (Section 2) shown in Fig. 5-3c……...96

Table 5-6. Major cost factors of the biodiesel production plants….…….98

Table 5-7. Utilities of the base case and novel plants……...99

Table 5-8. Range of variation of factors affecting the profitability of a chemical process……..102

Table 5-9. Uncertainties on some key parameters……..105

Table 5-10. Cash flow calculations of the base case design (Fig. 5-1) (All numbers in $\$10^6$)……...107

Table 5-11. Cash flow calculations of the novel design (Fig. 5-3) (All numbers in $\$10^6$)……...107

Table 5-12. Discounted profitability criterion of the base case and novel plants……...108

Table 6-1. Streams properties of Section 1 of the novel biodiesel production plant by glycerolysis shown in Fig. 6-1b…….121

Table 6-2. Streams properties of Section 2 of the novel biodiesel production plant by glycerolysis shown in Fig. 6-1c…….121

Table 6-3. Major cost factors of the biodiesel production plants……123

Table 6-4. CAPCOST 2008 input summary for the direct carboxylation plant……..…124

Table 6-5. CAPCOST 2008 input summary for the glycerolysis plant……..125

Table 6-6. Uncertainties on some key parameters……..126

Table 6-7. Discounted profitability criteria…….127

Table A-1. Hazardous identification and first aid measures……...A-1

Table A-2. Fire fighting measures, accidental release measures, and handling and storage……...A-2

Table A-3. Physical and chemical properties……..A-3

Table A-4. Stability and reactivity……..A-4

Table A-5. Hazardous identification and first aid measures……...A-5

Table B-1. Input summary of the retrofitted design (Fig. B-1)…….....A-7

Table B-2. Column T101 results summary of the retrofitted design (Fig. B-1)…….A-9

Table B-3. Column T102 results summary of the retrofitted design (Fig. B-1)……...A-15

Table C-1. Input summary of rate-based design 2 (Fig. C-1)……...A-27

Table C-2. Column RD101 results summary of the rate-based design 2 (Fig. C-1)…A-28

Table C-3. Sensitivity analysis…….A-37

Table D-1. Input summary of the thermally coupled design (Fig. D-1)……...A-41

Table D-2. Column RD101 results summary of the thermally coupled design (Fig. D-1)……...A-43

Table D-3. Sensitivity analysis of stream S4A flow rate……..A-50

Table D-4. Column T101 results summary of the thermally coupled design (Fig. D-1)……...A-51

Table E-1. Input summary of the novel plant (Fig. E-1)……..A-59

Table E-2. Compressor COM201 results summary of the novel plant (Fig. E-1c)…..A-65

Table E-3. Reactor R201 results summary of the novel plant (Fig. E-1c)……...A-66

Table E-4. Design specifications…….…….A-67

Table E-5. Flash drum F201 summary of the novel plant (Fig. E-1c)…….….A-68

Table E-6. Flash drum F202 results summary of the novel plant (Fig. E-1c)……..A-69

Table E-7. Column T201 results summary of the novel plant (Fig. E-1c)……...A-70

Table E-8. Column T202 results summary of the novel plant (Fig. E-1c)……...A-77

Table F-1. Input summary of the glycerolysis plant (Fig. F-1)……A-83

Table F-2. Reactor R101 results summary of the glycerolysis plant (Fig. F-1b)…….A-88

Table F-3. Distillation column T101 results summary of the glycerolysis plant (Fig. F-1b)……..A-89

Table F-4. Design specification summary of flash drum F201 (Fig. F-1c)……..A-90

Table F-5. Flash drum F201 results summary of the glycerolysis plant (Fig. F-1c)…A-91

Table F-6. Reactor R201 results summary of the glycerolysis plant (Fig. F-1c)…….A-92

Table F-7. Flash drum F202 results summary of the glycerolysis plant (Fig. F-1c)…A-93

Table F-8. Column T201 results summary of the glycerolysis plant (Fig. F-1c)….…A-94

Table F-9. Utilities of the direct carboxylation plant and glycerolysis plant……...A-98

Table F-10. Discounted cumulative cash flows generated by CAPCOST 2008……..A-99

LIST OF FIGURES

Fig. 1-1. Biodiesel production by transesterification……...5

Fig. 1-2. Ternary diagram for the mixture FAME-methanol-glycerol at 1 bar……...6

Fig. 1-3. Biodiesel production by esterification……..7

Fig. 2-1. Mass and energy balances envelope for the top-down calculation procedure…19

Fig. 2-2. Process flow diagram for base case and retrofitted biodiesel plants……...23

Fig. 2-3. Column T101: (a) base case stage-enthalpy deficit curves; (b) base case temperature-enthalpy deficit curves; (c) comparison of the stage-enthalpy deficit curves of base case and retrofitted designs; (d) comparison of stage-exergy loss profile of base case and retrofitted designs……27

Fig. 2-4. Column T102: (a) base case temperature-enthalpy deficit curves; (b) temperature-enthalpy deficit curves with side reboiler; (c) comparison of the stage-enthalpy deficit curves of base case and retrofitted designs; (d) comparison of the stage-exergy loss profile of base case design and retrofitted design……...31

Fig. 3-1. Reactive distillation for a reaction A+B$\rightarrow$C+D…….39

Fig. 3-2. Reactive distillation in the esterification of lauric acid with methanol……...46

Fig. 3-3. Column RD101: (a) methanol composition profiles; (b) lauric acid composition profiles; (c) water composition profiles; (d) ester composition profiles; (e) temperature profiles; (f) conversion profiles……..52

Fig. 3-4. Ternary diagram for the mixture lauric acid-methanol-water at 9.5 atm……53

Fig. 3-5. Sensitivity analysis of molar reflux ratio on; (a) ester mass fraction in the bottom product stream; (b) water mass fraction on stage 3…….54

Fig. 3-6. Sensitivity analysis of side heater location on the water mass fraction with a heater duty of 500 kW…….54

Fig. 3-7. Sensitivity analysis of side heater duty on; (a) ester mass fraction in the bottom production stream; (b) water mass fraction on stage 3……..55

Fig. 4-1. Thermally coupled distillation column configurations: (a) side-stripper; (b) side-rectifier; (c) petlyuk……..64

Fig. 4-2. Thermally coupled reactive configurations for esterification of lauric acid with methanol: (a) side-stripper; (b) side-rectifier; (c) petlyuk……..64

Fig. 4-3. Process flow diagrams for biodiesel plant: (a) base case design; (b) thermally coupled design…….68

Fig. 4-4. Comparison of operating conditions for reactive distillation column RD101: (a) temperature profiles; (b) composition profiles; (c) reaction profiles; (d) exergy loss profiles……...72

Fig. 4-5. Hydraulic analysis and enthalpy deficit profiles for column RD101: (a) stage-liquid flow rate profiles of base case design; (b) stage-liquid rate profiles of thermally coupled design; (c) stage-vapor flow rate profiles of base case design; (d) stage-vapor flow rate profiles of the thermally coupled design; (e) stage-enthalpy deficit curves of base case design; (f) stage-enthalpy deficit curves of the thermally coupled design……..73

Fig. 4-6. Sensitivity analysis of stream S4A flow rate on: (a) ester mass fraction in the bottom product stream; (b) column RD101 reboiler duty……...75

Fig. 4-7. Comparison of operating conditions for distillation column T101: (a) temperature profiles; (b) exergy loss profiles……76

Fig. 4-8. Hydraulic analysis and enthalpy deficit profiles for column T101: (a) stage-liquid flow rate profiles of base case design; (b) stage-liquid flow rate profiles of thermally coupled design; (c) stage-vapor flow rate profiles of base case design; (d) stage-vapor flow rate profiles of thermally coupled design; (e) stage-enthalpy deficit curves of base case design; (f) stage-enthalpy deficit curves of the thermally coupled design……..77

Fig. 5-1. Process flow diagram of the base case biodiesel production plant……....88

Fig. 5-2. Sensivity analysis of flash column F101 temperature on: (a) molar flow rate of methanol in stream R3; (b) molar flow rate of glycerol in stream R3……89

Fig. 5-3. (a) Hierarchy of the novel biodiesel production plant; (b) process flow diagram of Section 1 for biodiesel and bioglycerol production plant; (c) process flow diagram of Section 2 for bioglycerol carbonate production plant ……92

Fig. 5-4. Cumulative Probability Function for Triangular Distribution……..103

Fig. 5-5. Cumulative Probability of NPV for Monte-Carlo Simulation……..104

Fig. 5-6. Comparison of the cumulative discounted cash flow diagram of the base case and novel biodiesel production plants……..108

Fig. 5-7. 1000-point Monte Carlo simulation on; (a) net present values (NPV), (b) discounted cash flow rate of return (DCFROR), (c) discounted payback period (DPBP)……..109

Fig. 6-1. (a) Hierarchy of the novel biodiesel production plant by glycerolysis route; (b) process flow diagram of Section 1 for biodiesel and bioglycerol production plant; (c) process flow diagram of Section 2 for bioglycerol carbonate production plant……...120

Fig. 6-2. Comparison of the cumulative discounted cash flow (CDCF) diagrams ofthe direct carboxylation and glycerolysis routes……..127

Fig. 6-3. 1000-point Monte Carlo simulation on; (a) net present values (NPV), (b) discounted cash flow rate of return (DCFROR), (c) discounted payback period(DPBP)……...129

Fig. B-1. Process flow diagram for biodiesel plant of the retrofitted design……..A-6

Fig. C-1. Reactive distillation in the esterification of lauric acid with methanol…….A-26

Fig. D-1. Process flow diagrams for biodiesel plant of the thermally coupled design…….A-40

Fig. E-1. (a) Hierarchy of the novel biodiesel production plant; (b) process flow diagram of Section 1 for biodiesel and bioglycerol production plant; (c) process flow diagram of Section 2 for bioglycerol carbonate production plant…..A-58

Fig. F-1. (a) Hierarchy of the novel biodiesel production plant by glycerolysis route; (b) process flow diagram of Section 1 for biodiesel and bioglycerol production plant; (c) process flow diagram of Section 2 for bioglycerol carbonate production plant……A-82

CHAPTER 1

Introductory Chapter

1.1. Introduction

The world's oil supply is anticipated to deplete by 2060 due to the increase in demand for energy coupled with depletion of petroleum oil [1]. Therefore, seeking for a sustainable energy pathway to meet the energy needs of the future generation is desirable. Biodiesel is renewable, nontoxic, biodegradable, and essentially free of sulfur and aromatics may be one of the most suitable candidates for future biofuel. Beside, U.S. Department of Energy life cycle analysis on biodiesel shows that biodiesel produces 78.5% less net carbon dioxide emissions compared to petroleum diesel [2]. In 2011, the United States produced approximately 1.1 billion gallons of biodiesel and the volume of production is expected to increase to 1.9 billion gallons in 2015 [3]. Major drawbacks of biodiesel production using vegetable oil are the cost of manufacturing and the high cost of oil since it competes with food. Currently, biodiesel production plants depend on government subsidies in order to keep their plants in operation. Thus, seeking for a more economic biodiesel production process to reduce the dependency of government subsidies and promote expansion of biodiesel industry is desirable.

1.2. Feedstocks

1.2.1. Current Feedstocks

Nowadays, biodiesel production processes utilize waste vegetable oil (WVO), animal fats, and virgin oil as feedstock. As a general rule, the higher the quality of the

feedstock, the more expensive it will be. Refined soybean, palm, rape and canola oils, contain over 99% of triglycerides, are examples of some of the most expensive oils. WVO and animal fats are the cheapest feedstock but the cost of production may be highest due to high content of free fatty acids and contaminants (water, particles, phospholipids, etc.) in triglycerides. Table 1-1 provides the approximate concentration of free fatty acid in refined vegetable oils, crude vegetable oils, restaurant waste grease, animal fat, and trap grease [4]. In the United States, soybean oil is most commonly used for biodiesel production. Currently, approximately 90% of biodiesel in the United States is derived from soybean oil. The current price of oil is about $93.0/barrel and it is accounts for more than 70% of the cost of biodiesel production [5].

Table 1-1. Free fatty acid content in biodiesel feedstocks [4].

Feedstock	Free fatty acid content (%)
Refined vegetable oils	<0.05
Crude vegetable oils	0.3-0.7
Restaurant waste grease	2-7
Animal fat	5-30
Trap grease	10-100

Table 1-2 provides the fatty acid composition of some commonly use oils [6]. According to the United States Department of Agriculture (USDA), 6.18 million metric tons of coconut oil is produced worldwide in 2011 [7]. Currently, coconut oil is being used to produce biodiesel in Philippines [8]. Biodiesel produced from coconut oil gel point is around 10°C, thus, use of pure biodiesel is possible only in temperate climates. Cold flow improvers, such as poly(lauryl methacrylate) homopolymer [9], ethanol

[10,11], and olefin-ester copolymers [12], can be blended to improve the cold flow properties of biodiesel.

Table 1-2. Fatty acid composition of food grade soybean oil, crude soybean oil, crude palm oil, waste cooking oil, crude corn oil from DDGs, crude algae oil and crude coconut oil [6].

Fatty acid components	Food grade soybean oil (%)	Crude soybean oil (%)	Crude palm oil (%)	Waste cooking oil (%)	Crude corn oil from DDGs (%)	Crude algae oil (%)	Crude coconut oil (%)
C 12:0	0	0	0	0	0	0	49.13
C 14:0	0	0.27	0.21	0	0	2.72	19.63
C 16:0	11.07	13.05	41.92	11.58	11.50	20.91	10.12
C 16:1	0.09	0.39	0.23	0.18	0	10.62	1.79
C 18:0	3.62	4.17	3.85	4.26	4.77	6.95	2.83
C 18:1	20.26	22.75	42.44	24.84	26.26	33.33	7.59
C 18:2	57.60	52.78	11.30	53.55	56.20	18.45	2.75
C 18:3	7.36	6.59	0.04	5.60	1.27	1.16	0.15
Others	0	0	0	0	00	6.86	6.01

1.2.2. Potential Future Feedstocks

Algae may be an alternative, sustainable and promising source of feedstock in the future due to high lipid production per unit volume [13-15]. According to the United States Department of Energy, algae fuel needs about 15,000 square miles (about 0.42% of the U.S. land) to replace all the petroleum fuel in the United States [16], which is less than 1/7 of land use for corn production. Also, algae can be produced using ocean and wastewater. However, the economic aspects of algal production require further development.

Currently, a simple monohydric alcohol, methanol, is the most commonly used alcohol due to low cost and high availability. However, ethanol from ethanol plant may be an alternative future potential source of alcohol for the production of biodiesel due to its renewability.

1.3. Biodiesel Production Processes

1.3.1. Biodiesel Production using Triglyceride

Triolein is used to represent triglyceride in this study for simulation purposes. All three fatty acid chains of triolein are oleic acid. The molecular weight of triolein is 885.46 g/mol, which is similar to the molecular weight of soybean oil.

1.3.1.1. Transesterification Reaction

The transesterification reaction mechanism consists of three consecutive and reversible reactions [17]. However, the simplified form of the transesterification reaction can be described by

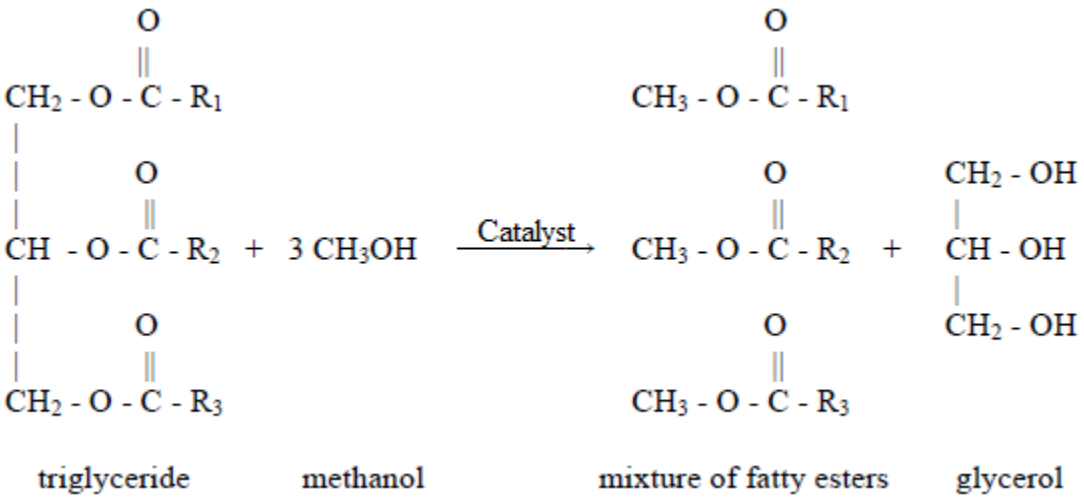

where R_1, R_2, and R_3 are the fatty acid chains, which composes of carbon and hydrogen atoms. Most biodiesel production processes use sodium hydroxide (NaOH) or potassium hydroxide (KOH) as a catalyst to initiate the transesterification reaction [18]. The catalyst is required mainly to improve the solubility of methanol in the oil phase. A strong mineral acid is used to neutralize the base catalyst after the reaction.

1.3.1.2. Biodiesel Production by Transesterification

Currently, most biodiesel production plants use triglyceride, methanol and NaOH or KOH as the three primary raw materials. Fig. 1-1 shows the simplest biodiesel production process by transesterification. The transesterification reaction commonly proceeds at 6:1 methanol to oil molar ratio, 65°C and use 0.3% to 1.5% of sodium hydroxide [4]. Free fatty acids react with a base catalyst and form soap and water, thus, it concentration must be kept below 1% in order to prevent the soap and water effects [4]. The reactor outlet is sent to the decanter for phase separation between glycerol and biodiesel. The ternary diagram of the mixture FAME-methanol-glycerol at 1 bar is shown in Fig. 1-2. Both phases contain alcohol, therefore, an evaporator or a flash unit is used to remove alcohol from both the glycerol and ester. Water is used to neutralize and wash the glycerol stream. Table 1-3 shows the composition of crude glycerol samples from seven different manufacturers [19]. Water is also used to wash and neutralize the ester stream to remove salts and residual methanol. A dryer unit is used to remove water from biodiesel.

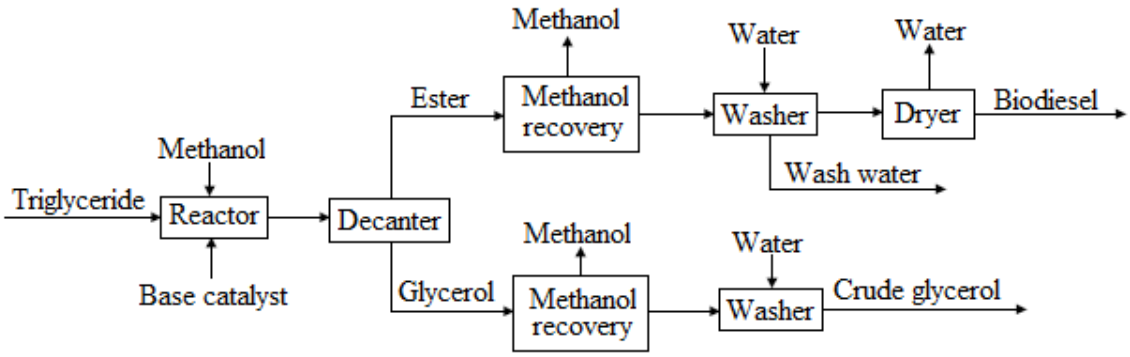

Fig. 1-1. Biodiesel production by transesterification.

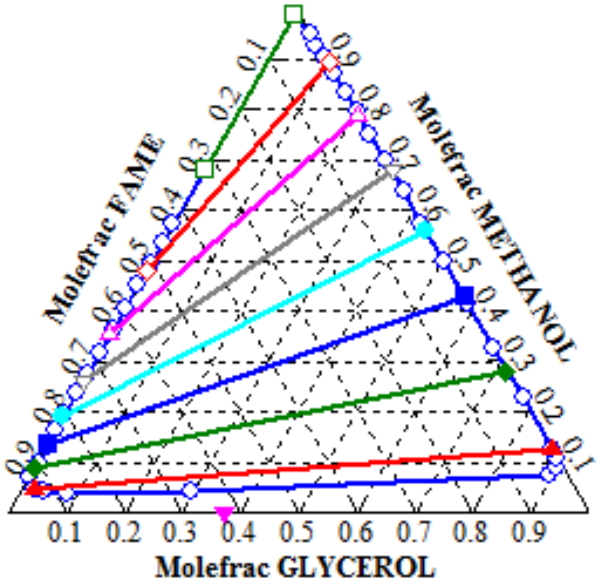

Fig. 1-2. Ternary diagram for the mixture FAME-methanol-glycerol at 1 bar.

Table 1-3. Composition of crude glycerol samples from different manufacturers [19].

	Glycerol (%)	H_2O (%)	Methanol (%)	NaCl (%)	K_2SO_4 (%)	pH
ADM	80	10.8	<0.01	5.5	_	5.9
NEW	85	10.5	<0.01	5.0	_	6.4
BD	82	12.1	<0.50	4.2	_	6.8
EOP	85	9.2	0.03	_	0.8	4.1
Campa	90	6.6	0.50	_	1.6	6.0
TME	77	14.2	0.0001	_	6.6	5.3
PetroTech	88	5.3	1.70	_	1.0	4.5

ADM: ADM Hamburg AG; NEW: Natural Energy West GmbH, Marl; BD: Bio-Diesel Wittengberge GmbH; EOP: EOP Biodiesel GmbH, Falkenhagen; Campa: Campa Energy GmbH, Ochsenfurt; TME: TME Methylesterwerk GmbH, Niederpollnitz; PetroTech: PetroTech GmbH, sudlohn.

1.3.2. Biodiesel Production using Free Fatty Acid

Lauric acid, a saturated medium chain fatty acid with 12-carbon atom chain, is used to represent free fatty acids in this study for simulation purposes because the reaction kinetic data is readily available in literature [20]. Lauric acid is the major component of coconut oil as shown in Table 1-2.

1.3.2.1. Esterification Reaction

Esterification of free fatty acid with methanol is given by

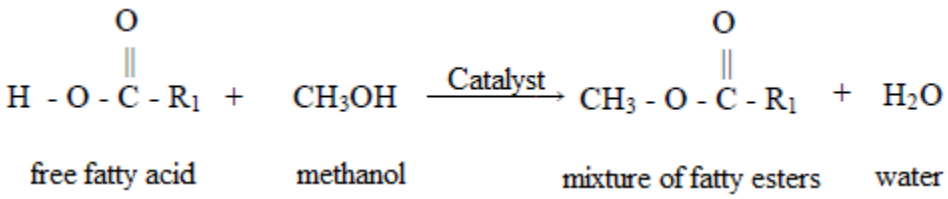

Here, water is produced as the by-product instead of glycerol. A strong homogeneous acid catalyst, such as sulfuric acid (H_2SO_4) or sulfonic acid, is commonly used to catalyze the esterification reaction since base catalysts react with free fatty acids to form soap and water.

1.3.2.2. Biodiesel Production by Esterification

Some biodiesel plants e.g. BTK&S Biodiesel use nearly pure free fatty acid, methanol and a strong acid catalyst as raw materials for biodiesel production. A simple process flow diagram of biodiesel production by esterification is presented in Fig. 1-3. A strong base is used to neutralize the acid catalyst after the reaction. The product stream is then sent to the methanol separation unit to recovery methanol. Further, water and other impurities are removed by using a dryer unit.

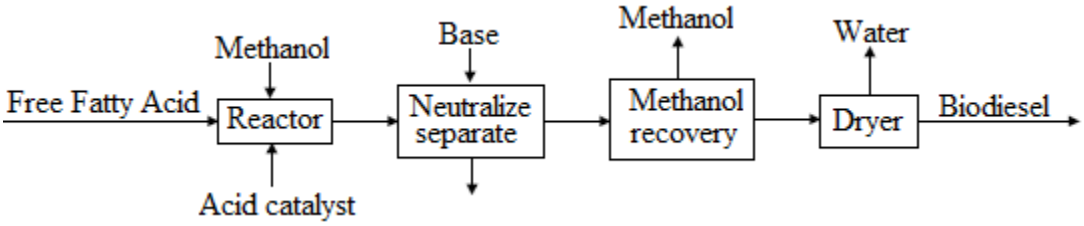

Fig. 1-3. Biodiesel production by esterification.

1.4. American and European Biodiesel Quality Standards (ASTM D-6751)

Parameters that must be met to obtain ASTM D6751 biodiesel quality standards are:

- Flash point must be greater than 93°C.
- Water and sediment must be less than 0.05% by volume.
- Kinematic viscosity at 40°C is within 1.9 - 6.0 mm^{2}/s.
- Sulfated ash must be less than 0.02% by mass.
- Total sulfur must be less than 0.05 wt.%.
- Copper strip corrosion must be less than No. 3.
- Methanol content must be less than 0.20% by volume.
- Cetane number must be greater than 47.
- Cloud point must report in ^{o}C to customer.
- Carbon residue must be less than 0.50% by mass.
- Acid number must be lower than 0.50 mg KOH/g.
- Free glycerine must be less than 0.02% by mass.
- Total glycerin must be less than 0.24% by mass.
- Phosphorus must be less than 0.001 wt.%.
- Vacuum distillation end point must be less than 360°C.
- Oxidatione stability must be greater than 3 hours.

ASTM Internationl has complete copies of ASTM standards for $35.00 per standard.

1.5. Chemicals Used in this Study

Table 1-4 provides all of the chemicals, including name, chemical formula, CAS number, molar mass, and supplier, used in this study. Brief description of hazardous identification, first aid measures, fire fighting measures, accidental release measure, handling and storage, physical and chemical properties, stability and reactivity, toxicological information and ecological information from the MSDS sheet provided by the supplier shown in Table 1-4 is presented in Tables A-1 to A-5 in Appendix A. Knowing the boiling point of chemicals is crucial because it allows the process engineer to predict the temperature and number of stages required for separation.

Table 1-4. Chemicals used in this study.

Compound	Chemical Formula	CAS Number	Molar Mass (g/mol)	Supplier
Ammonia	NH_3	7664-41-7	17.031	Air Products and Chemicals, Inc.
Calcium and Lanthanum	Ca_3La_1	*	259.139	*
Calcium oxide	CaO	1305-78-8	56.077	Science Stuff, Inc.
Carbon dioxide	CO_2	124-38-9	44.010	Praxair, Inc.
Dibutyltin oxide	$C_8H_{18}OSn$	818-08-6	248.920	Arkema Inc.
FAME (Methyl-oleate)	$C_{19}H_{36}O_2$	112-62-9	296.494	Cargill
Glycerol	$C_3H_8O_3$	56-81-5	92.095	Sciencelab.com, Inc.
Glycerol carbonate	$C_4H_6O_4$	931-40-8	118.088	Hutsman Petrochemical Corporation
Lanthanum oxide	La_2O_3	1312-81-8	325.809	Sciencelab.com, Inc.
Lauric acid	$C_{12}H_{24}O_2$	143-07-7	200.321	Columbus Chemical Industries, Inc.
Methyl dodecanoate	$C_{13}H_{24}O_2$	111-82-0	214.348	Hangzhou Kalong Trade Co., Ltd.
Methanol	CH_4O	67-56-1	32.042	Methanex Corporation
Oil (Triolein)	$C_{57}H_{104}O_6$	122-32-7	885.449	Cayman Chemical Company
Phosphoric acid	H_3PO4	7664-38-2	97.994	J.R. Simplot Company
Sodium phosphate tribasic	Na_3PO_4	7601-54-9	163.940	Science Stuff, Inc.
Sodium hydroxide	NaOH	1310-73-2	39.997	Certified Lye
Urea	NH_4N_2O	57-13-6	60.056	Sciencelab.com, Inc.
Water	H_2O	7732-18-5	18.015	Sciencelab.com, Inc.
Zirconium sulfate	$Zr(SO_4)_2$	14644-61-2	285.350	China Langcem Inc.

*See reference [21] for how to prepare.

1.6. Aspen Plus simulation

Aspen Plus simulation uses basic engineering relationships, such as mass and energy balances, to estimate the behavior of a chemical process. Aspen Plus simulation allows process engineers to design and test a chemical process in short period of time. Also, it can be used to investigate the effects of different design parameters of the chemical process and give results that are difficult to obtain in laboratory. By using experimental thermodynamic data and realistic operating conditions, the actual process behavior can be simulated. Moreover, process simulation enables process engineers develop better processes by using tools such as sensitivity analysis, calculator block, optimization block, profitability analysis and design specification. Aspen Plus process simulation can be used by the following steps [22]:

Step 1: Identify the unit operations and the process streams that flow to and from them in the process flowsheet. Label all streams and connect them to the unit operation models.

Step 2: Identify the chemical components from the Aspen Plus databanks or define them in the process.

Step 3: Identify thermodynamic models built into Aspen Plus to estimate the physical properties of the components and mixtures in the process.

Step 4: Identify the thermodynamic conditions and the component flow rates of the input streams.

Step 5: Identify the operating conditions for the unit operation models.

Users can change all of the above input specifications to analyze alternative processes. Furthermore, Aspen Plus can be used to fit plant data to simulation models, predict and regress physical properties, generate tabular output results, and interface results to spreadsheets.

1.7. Objectives

This dissertation focuses on reducing the overall production cost of biodiesel by using Aspen Plus simulation package through thermodynamic analysis, process integration and process intensification. Also, new processes are developed to convert a secondary by-product, glycerol, of the biodiesel production plant into a value-added product, glycerol carbonate, to reduce the unit cost of the biodiesel production plant. A more stable biodiesel industry will promote expansion leading to reduction of U.S. dependence on domestic and imported fossil fuels.

References

1. Okullo, S.J., Reynes, F. 2011. Can reserve additions in mature crude oil provinces attenuate peak oil?. Energy 36, 5755-5764.

2. Sheehan, J., Camobreco, V., Duffield, J., et al. 1998. Life cycle inventory of biodiesel and petroleum diesel for use in an urban bus. www.nrel.gov. Accessed on December 20, 2011.

3. Urbanchuk, J.M. 2011. Economic impact of removing the biodiesel tax credit for 2010 and implementation of RFS2 targets through 2015. Cardno Entrix. www.cardnoentrix.com.

4. Gerpen, J.V., Shanks, B., Pruszko, R. 2004. Biodiesel production technology. National Renewable Energy Laboratory, Colorado.

5. Behzadi, S., Farid, M.M. 2007. Review: Examining the use of different feedstock for the production of biodiesel. Asia-Pac. J. Chem. Eng. 2, 480-486.

6. Yan, S., Dimaggio, C., Mohan, S., et al. 2010. Advancements in heterogeneous catalysis for biodiesel synthesis. Top. Catal. 53, 721-736.

7. United States Department of Agriculture Foreign Agricultural Service. 2012. Table 19: World: Palm Oil, Coconut Oil, and Fish Meal Supply and Distribution. http://www.fas.usda.gov/. Accessed on May 10, 2012.

8. PRI's The World. 2006. Coconut fuel. http://www.pri.org/theworld/. Accessed on April 26, 2012.

9. Chastek, T.Q. 2011. Improving cold flow properties of canola-based biodiesel. Biomass Bioenergy 35, 600-607.

10. Torres-Jimenez, E., Svoljšak-Jerman, M., Gregorc, A., et al. 2010. Physical and chemical properties of ethanol-biodiesel blends for diesel engines. Energy Fuels 24, 2002-2009.

11. Bhale, P.V., Deshpande, N.V., Thombre, S.B. 2009. Improving the low temperature properties of biodiesel fuel. Renew. Energy 34, 794-800.

12. Boshui, C., Yuqiu, S., Jianhua, F., et al. 2010. Effect of cold flow improvers on flow properties of soybean biodiesel. Biomass Bioenergy 34, 1309-1313.

13. Ahmad, A.L., Mat Yasin, N.H., Derek, C.J.C., et al. 2011. Microalgae as a sustainable energy source for biodiesel production: A review. Renewable Sustainable Energy Rev 15, 584-593.

14. Chisti, Y. 2007. Biodiesel from microalgae. Biotechnol. Adv. 25, 294-306.

15. Gallagher, B.J. 2011. The economics of producing biodiesel from algae. Renew. Energy 36, 158-162.

16. Hartman, E. 2008. A promising oil alternative: Algae Energy. www.washingtonpost.com. Accessed on September 17, 2011.

17. Noureddini, H., Zhu, D. 1997. Kinetics of transesterification of soybean oil. JAOCS 74, 1457-1463.

18. Gerpen, J.V. 2005. Biodiesel processing and production. Fuel Process Technol 86, 1097-1107.

19. Mothes, G., Schnorpfeil, C., Ackermann, J-U. 2007. Production of PHB from crude glycerol. Eng. Life Sci. 5, 475-479.

20. Kiss, A.A. 2011. Heat-integrated reactive distillation process for synthesis of fatty esters. Fuel Process Technol 92, 1288-1296.

21. Yan, S., Kim, M., Salley, S.O., et al. 2009. Oil transesterification over calcium oxides modified with lanthanum. Appl Catal A Gen 360, 163-170.

22. Aspen Technology, Inc. 2009. Getting started building and running a process model. www.aspentech.com.

CHAPTER 2

Retrofit of Distillation Columns in Biodiesel Production Plants

2.1. Introduction

Separation by distillation is energy intensive process. Operations in four different continuous biodiesel plants show that the cost of separation by distillation varies from 7% to 22% of the total manufacturing cost [1] and the methanol separation accounts around 66% of it [2]. Retrofits suggest modifications for existing distillation columns to reduce the costs of operations by increasing the efficiency in energy utilization [3–5]. Thermodynamic Analysis is one of the methods for retrofitting by reducing the thermodynamic losses due to heat and mass transfer, pressure drop, and mixing [4,6]. The Aspen Plus simulator performs the thermodynamic analysis through its Column-Targeting Tool for rigorous column calculations [7]. Column grand composite curves (CGCCs) and the exergy loss profiles produced by the Column-Targeting Tool are used to retrofit the existing distillation columns in a biodiesel production plant. CGCCs and stage-exergy loss profiles are becoming readily available [7] even for multicomponent, complex distillation column operations [8,9]. This enables the process engineer to assess an existing operation, and suggest suitable retrofits for reducing utility costs by improving efficiency in energy usage [10,11].

2.2. Methods and Approaches

2.2.1. Simulation

Aspen Plus simulation package is used to design, develop, and simulate a conventional biodiesel production plant and a retrofitted biodiesel production plant. The process flow diagram (PFD) of the conventional biodiesel production plant is developed based on reference [1]. Thermodynamic analysis composes of column grand composite curve, exergy loss profiles, NQ curves, and equipartition principle is used to optimize the conventional biodiesel production plant.

2.2.2. Thermodynamic Analysis (TA)

An entropy effect leading to exergy loss either within or through the boundary of a system is unavoidable in every irreversible system. Thermodynamic analysis determines the net enthalpy deficits and exergy losses due to irreversibility at each stage of a distillation column by combining the first and second laws of thermodynamics. The distributions of the exergy losses and enthalpy deficits identify the extent and scope of retrofits for improvements by reducing the irreversibility [10–17] and/or distributing them evenly [15]. Effectiveness of retrofits is determined after overall optimization, which seeks improvement for the conventional plant under specific constraints. Therefore, the relations between the energy efficiency and capital cost must be evaluated [18].

The column grand composite curve (CGCC) and the exergy loss profiles are generated by the Column-Targeting tool of Aspen Plus based on the Practical Near-Minimum Thermodynamic Condition (PNMTC). Enthalpy deficit curves are available as stage-enthalpy (Stage-H) and temperature-enthalpy (T-H) profiles. These profiles represent the cumulative heating and cooling requirements for the column to operate at PNMTC. This approximation takes into account the losses or inefficiencies introduced through pressure drops, mixing, and heat and mass transfer. A part of accessible work potential is always lost in any real process. Exergy (E_x) is the accessible work potential and defines the maximum amount of work that may be performed theoretically by bringing a resource into equilibrium with its surrounding through a reversible process. Molar physical exergy (e_x) is defined by

$$e_x = \Delta h - T_0 \Delta s = (h - h_0) - T_0 (s - s_0) \tag{2-1}$$

where h is the molar enthalpy, s is the molar entropy, and T_o is the reference temperature, which is usually assumed as the environmental temperature of 25.0^{o}C. Exergy is a function of both the physical properties of a resource and its environment. Exergy loss profiles are available as stage-exergy loss and temperature-exergy loss profiles, and measure the irreversibility in the column due to momentum loss (pressure driving force), thermal loss (temperature driving force/mixing), and chemical potential loss (mass transfer driving force/mixing). These profiles can be used as a tool to examine the degradation of accessible work for all the internal trays of the column.

2.2.2.1. Column Grand Composite Curve (CGCC)

The CGCC displays the net enthalpies for the actual and ideal operations at each stage, and theoretical minimum cooling and heating requirements in the temperature range of separation. The area between the actual and the ideal operations in a CGCC should be small. The CGCCs help in identifying the following retrofits: (i) feed location (appropriate placement), (ii) reflux ratio (reflux ratio vs. number of stages), (iii) feed conditioning (heating or cooling), and (iv) side condensing and reboiling. A sharp enthalpy change occurring on the Stage-H CGCC on the condenser side indicates that a feed has been introduced too high up in the column and should be moved down. Similarly, a feed introduced too low in the column will cause a sharp enthalpy change on the Stage-H CGCC on the reboiler side and should be moved up. Appropriate feed placement removes the distortions in the Stage-H CGCC and reduces the condenser or reboiler duty. Reflux ratio reduction lowers the condenser and reboiler duties and decreases operating costs, however, it will increase the number of stages, increase capital costs, to preserve the separation. User must carefully analyze to determine whether saving in operating costs compensate higher capital costs. Feed preheating or cooling can reduce thermal loss on the feed stage. Using existing heat sources available in the plant are desirable and side condensing or side reboiling provides the column with a cheaper cold or hot utility [3–7].

The overall mass balance, shown in Fig. 2-1, for the top-down calculation procedure is

$$\dot{V}_{\min} + \dot{F} = \dot{D} + \dot{L}_{\min} \tag{2-2}$$

where $\dot{V}$ is the vapor flow rate, $\dot{F}$ is the feed flow rate, $\dot{D}$ is the distillate flow rate, and $\dot{L}$ is the liquid flow rate. The component balances is given by

$$\dot{V}_{\min} y^* + \dot{F} z_F = \dot{D} x_D + \dot{L}_{\min} x^* \tag{2-3}$$

Combine equations (2-2) and (2-3) to obtain the minimum vapor flow rate ($\dot{V}_{\min}$) and minimum liquid flow rate ($\dot{L}_{\min}$)

$$\dot{L}_{\min} = [\dot{D}(x_D - y^*) - \dot{F}(z_F - y^*)]/(y^* - x^*) \tag{2-4}$$

$$\dot{V}_{\min} = [\dot{D}(x_D - x^*) - \dot{F}(z_F - x^*)]/(y^* - x^*) \tag{2-5}$$

where y is the vapor mole fraction, x is the liquid mole fraction and z is the feed mole fraction. The ideal enthalpy deficit (H_{def}) may be evaluated by the following equation [3]

$$\dot{V}_{\min} H_V + \dot{F} H_F + H_{def} = \dot{L}_{\min} H_L + \dot{D} H_D \tag{2-6}$$

Rearrange and combine the above equations to obtain

$$\begin{aligned} H_{def} &= \dot{D}\left\{H_D + \left[(H_L - H_V)x_D + \left(H_V x^* + H_L y^*\right)\right]/\left(y^* - x^*\right)\right\} \\ &- \dot{F}\left\{H_F + \left[(H_L - H_V)z_F + \left(H_V x^* - H_L y^*\right)\right]/\left(y^* - x^*\right)\right\} \end{aligned} \tag{2-7}$$

The enthalpy values use in the CGCC (H_{CGCC}) may be determined by the following equation

$$H_{CGCC} = \dot{Q}_C + H_{def} \tag{2-8}$$

where $\dot{Q}_C$ is the condenser duty. Aspen Plus converged simulation provides enthalpies, molar flows, and compositions for the stage, product and feed, which can be used to

evaluate the ideal enthalpy deficit. This procedure can be expanded for multiple feeds and side products.

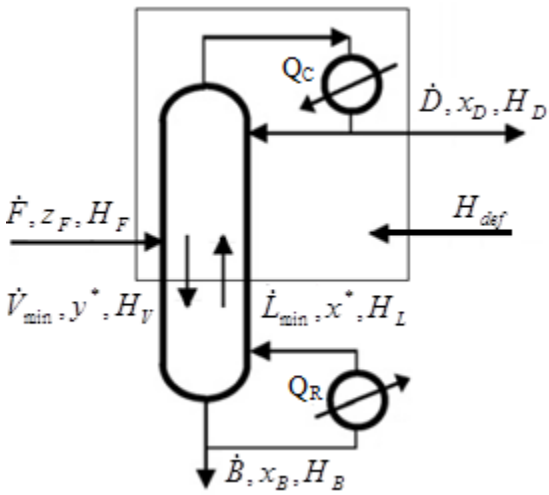

Fig. 2-1. Mass and energy balances envelope for the top-down calculation procedure.

A horizontal distance between the vertical axis and CGCC pinch point indicates the excessive use of heat, therefore suggests reduction in reflux ratio (*R*) to reduce overall energy requirement [18]. The CGCC will move closer to the vertical axis as the reflux ratio is decreased leading to reduction in condenser duty and reboiler duty, which may be estimated by

$$\dot{Q}_R - \dot{Q}_{R,\min} = \dot{Q}_C - \dot{Q}_{C,\min} = \dot{D}\lambda\left(R - \frac{\left(x_D - y_F^*\right)}{\left(y_F^* - x_F^*\right)}\right) \tag{2-9}$$

where $\dot{Q}_R$ is the reboiler duty and λ is the heat of vaporization. Whether to install a side condenser or side reboiler depends on the horizontal distance of the temperature axis from the CGCC [12]. For example, a subcooled feed will cause a sharp change on the reboiler side, and a side reboiler can be installed with a heat duty depending on the change [13].

2.2.2.2. Exergy Loss Profiles

The energy balance for a steady state system is

$$\sum_{\text{out of system}} (\dot{n}h + \dot{Q} + \dot{W}_S) - \sum_{\text{into system}} (\dot{n}h + \dot{Q} + \dot{W}_S) = 0 \qquad (2\text{-}10)$$

where $\dot{W}_S$ is the shaft work, $\dot{Q}$ is the heat flow, and $\dot{n}$ is the molar flow rate. For a steady state system, exergy balance is not conserved [16,20]

$$\sum_{into system} \left(\dot{n}e_x + \dot{Q}\left(1 - \frac{T_0}{T_S}\right) + \dot{W}_S \right) - \sum_{out of system} \left(\dot{n}e_x + \dot{Q}\left(1 - \frac{T_0}{T_S}\right) + \dot{W}_S \right) = \dot{E}_{x,loss} \qquad (2\text{-}11)$$

Exergy losses ($\dot{E}_{x,loss}$) indicate ineffective use of available energy, and should be reduced by suitable retrofits. The rate of entropy production in a column is directly proportional to the rate of exergy loss, which causes by irreversibility. The energy requirement for separation has to increase as the exergy loss increases leading to more thermodynamic imperfections and waste heat. Therefore, operation with less exergy losses generated less waste heat is desirable.

2.2.2.3. Column NQ Curves

NQ curves are the plots of heat load Q versus total number of stages N. NQ curves analysis in Aspen Plus calculates number of stages, reflux ratio, and optimum feed locations where a certain heat load (reboiler duty or condenser duty or both) is minimized in a distillation column [6]. These calculations do not alter the simulation results of the same column. NQ curves can be extended to plot reflux ratio as it is related to heat load

and automatically generate the results of heat load and objective function to plot against number of stages. Reboiler duty, condenser duty, condenser and reboiler duty, or reflux ratio on specified basis can be used as an objective function. If the objective function is minimized, heat load will show a monotonic decrease with increasing number of stage.

NQ curves analysis can handle columns with multiple products, feeds, decanters, and pumparounds and two-phase and three-phase calculations. However, the column needs to be constrained by temperature, purity, and/or recovery specification and must have a sufficiently large number of stages to perform NQ curves. Users must select the limits of the feed stage movement and a feed for the feed tray optimization. The lower and upper limits for the number of stages must be specified and the upper limit cannot be greater than the number of stages in the base case design.

2.2.2.4. Equipartition Principle

The equipartition of forces principle combines the nonequilibrium thermodynamics approach with the Cauchy-Lagrange optimization procedure and shows that the best trade-offs between exergy loss and transfer area in transport processes are possible when the thermodynamic driving forces are uniform over the transfer area [16,21]. Some options for achieving a thermodynamic optimum are to improve an existing design so the operation will be less irreversible, and to distribute the irreversibilities uniformly over space and time [22].

2.3. Biodiesel Production Plant

Fig. 2-2 shows the process flow diagram (PFD) of a conventional biodiesel plant with retrofitted distillation columns. Table B-1 in Appendix B provides the input summary of the retrofitted design. The biodiesel plant uses methanol, oil, NaOH and H_3PO_4 as the basic feed streams, and produces 9,705.40 kg/h and 98.3% pure of fatty acid methyl ester (FAME). The byproducts are 99.33% pure 978.55 kg/h glycerol and 90.18% pure 176.27 kg/h water. Recycle and fresh methanol and oil are mixed in mixer M102 before sending to the RStoic reactor, R101, as shown in Fig. 2-2. The FAME synthesis takes place in a RStoic reactor by transesterification reaction catalyzed by NaOH at 60°C [1,23] with a byproduct of glycerol. The methanol/oil molar ratio is 6:1 and 95% percent oil conversion was assumed [23]. The reactor outlet contains FAME, methanol, oil, water, NaOH, and glycerol is pumped into the extractor EX101 that uses water as a solvent to partially extract polar components from the mixture. The top product is fed to distillation column T101 at stage 2 where the FAME is purified. This column operates with four stages, a partial-vapor-liquid condenser and a kettle reboiler. Table B-2 presents the summary, such as column specifications, mass flow profiles, K-values, column targeting results, hydraulic parameters, and tray sizing calculations, of distillation column T101. The bottom product containing some FAME and mostly oil is recycled to the reactor. The vapor phase stream containing small amounts of water/methanol is a waste stream while the distillate is the product FAME. Tables 2-1 and 2-2 show the stream summary of the base case and retrofitted designs shown in Fig. 2-2.

The bottom flow of the extractor EX101 and phosphoric acid (H_3PO_4) are fed to the reactor R102 where acid/base neutralization reaction takes place. The reactor outlet contains liquid water, methanol, glycerol, and some solid Na_3PO_4. Separator SEP101 separates the solid waste while the liquid stream S8 is fed to flash drum F101 where the separation of glycerol from methanol and water takes place. The bottom product contains nearly pure glycerol while the distillate is cooled to 80°C and fed to stage 9 of distillation column T102 for purification of methanol. Column T102 has 12 stages, a total condenser and a kettle reboiler. Table B-3 provides the summary of column T102 for the retrofitted design. The bottom product is mainly water and the distillate methanol is recycled through mixer M101.

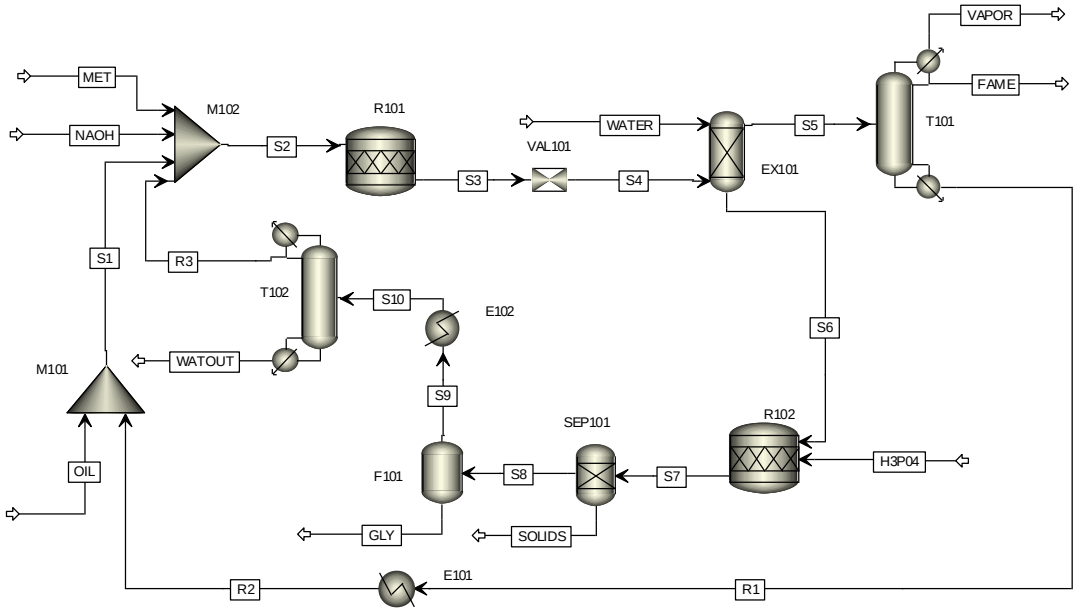

Fig. 2-2. Process flow diagram of base case biodiesel plant with retrofitted distillation columns.

The thermodynamic model of UNIFDMD is used to estimate the vapor properties in column T101, while the activity coefficient model NRTL model is used for predicting

the equilibrium and liquid properties in column T102. Both the thermodynamic models are listed within the Aspen Plus and are chosen based on the type of the feed mixture and nonideality in the liquid and vapor phases.

Table 2-1. Streams properties of the base case design.

	FAME	GLY	H3PO4	METH	NAOH	OIL	R1	R2	R3	S1	S2	S3
Mass Flow kg/hr												
METHANOL	18.23	5.77	0.00	1125.92	0.00	0.00	0.00	0.00	1045.33	0.00	2171.25	1139.91
OIL	138.92	0.00	0.00	0.00	0.00	9639.09	360.92	360.91	0.00	10000.00	10000.00	500.00
FAME	9542.11	0.02	0.00	0.00	0.00	0.00	140.00	140.00	0.00	140.00	140.00	9683.26
GLYCEROL	0.00	971.98	0.00	0.00	0.00	0.00	0.00	0.00	0.00	0.00	0.00	988.09
NAOH	0.00	0.00	0.00	0.00	95.99	0.00	0.00	0.00	0.00	0.00	95.99	95.99
WATER	6.13	0.77	0.00	0.00	0.00	0.00	0.00	0.00	8.40	0.00	8.40	8.40
H3PO4	0.00	0.00	78.40	0.00	0.00	0.00	0.00	0.00	0.00	0.00	0.00	0.00
NA3PO4	0.00	0.00	0.00	0.00	0.00	0.00	0.00	0.00	0.00	0.00	0.00	0.00
Mass Frac												
METHANOL	0.0019	0.0059	0.0000	1.0000	0.0000	0.0000	0.0000	0.0000	0.9920	0.0000	0.1749	0.0918
OIL	0.0143	0.0000	0.0000	0.0000	0.0000	1.0000	0.7205	0.7205	0.0000	0.9862	0.8054	0.0403
FAME	0.9832	0.0000	0.0000	0.0000	0.0000	0.0000	0.2795	0.2795	0.0000	0.0138	0.0113	0.7799
GLYCEROL	0.0000	0.9933	0.0000	0.0000	0.0000	0.0000	0.0000	0.0000	0.0000	0.0000	0.0000	0.0796
NAOH	0.0000	0.0000	0.0000	0.0000	1.0000	0.0000	0.0000	0.0000	0.0000	0.0000	0.0077	0.0077
WATER	0.0006	0.0008	0.0000	0.0000	0.0000	0.0000	0.0000	0.0000	0.0080	0.0000	0.0007	0.0007
H3PO4	0.0000	0.0000	1.0000	0.0000	0.0000	0.0000	0.0000	0.0000	0.0000	0.0000	0.0000	0.0000
NA3PO4	0.0000	0.0000	0.0000	0.0000	0.0000	0.0000	0.0000	0.0000	0.0000	0.0000	0.0000	0.0000
Total Flow kg/hr	9705.40	978.55	78.40	1125.92	95.99	9639.09	500.92	500.91	1053.73	10140.00	12415.64	12415.64
Temperature C	53.67	100.00	25.00	25.00	25.00	25.00	297.91	25.00	64.53	25.00	29.46	60.00
Pressure bar	0.08	0.05	1	1	1	1	0.18	1	1	1	1	4

	S4	S5	S6	S7	S8	S9	S10	SOLIDS	VAPOR	WATER	WATOUT
Mass Flow kg/hr											
METHANOL	1139.91	88.73	1051.18	1051.18	1051.18	1045.40	1045.40	0.00	70.50	0.00	0.07
OIL	500.00	500.00	0.00	0.00	0.00	0.00	0.00	0.00	0.16	0.00	0.00
FAME	9683.26	9682.11	1.14	1.14	1.14	1.12	1.12	0.00	0.00	0.00	1.12
GLYCEROL	988.09	0.00	988.09	988.09	988.09	16.12	16.12	0.00	0.00	0.00	16.12
NAOH	95.99	0.00	95.99	0.00	0.00	0.00	0.00	0.00	0.00	0.00	0.00
WATER	8.40	33.50	124.90	168.13	168.13	167.36	167.36	0.00	27.37	150.00	158.96
H3PO4	0.00	0.00	0.00	0.00	0.00	0.00	0.00	0.00	0.00	0.00	0.00
NA3PO4	0.00	0.00	0.00	131.15	0.00	0.00	0.00	131.15	0.00	0.00	0.00
Mass Frac											
METHANOL	0.0918	0.0086	0.4649	0.4493	0.4760	0.8499	0.8499	0.0000	0.7191	0.0000	0.0004
OIL	0.0403	0.0485	0.0000	0.0000	0.0000	0.0000	0.0000	0.0000	0.0016	0.0000	0.0000
FAME	0.7799	0.9396	0.0005	0.0005	0.0005	0.0009	0.0009	0.0000	0.0000	0.0000	0.0063
GLYCEROL	0.0796	0.0000	0.4370	0.4223	0.4474	0.0131	0.0131	0.0000	0.0000	0.0000	0.0914
NAOH	0.0077	0.0000	0.0424	0.0000	0.0000	0.0000	0.0000	0.0000	0.0000	0.0000	0.0000
WATER	0.0007	0.0033	0.0552	0.0719	0.0761	0.1361	0.1361	0.0000	0.2792	1.0000	0.9018
H3PO4	0.0000	0.0000	0.0000	0.0000	0.0000	0.0000	0.0000	0.0000	0.0000	0.0000	0.0000
NA3PO4	0.0000	0.0000	0.0000	0.0561	0.0000	0.0000	0.0000	1.0000	0.0000	0.0000	0.0000
Total Flow kg/hr	12415.64	10304.35	2261.29	2339.69	2208.54	1230.00	1230.00	131.15	98.03	150.00	176.27
Temperature C	60.11	60.40	60.19	50.00	50.00	100.00	80.00	50.00	53.67	25.00	100.18
Pressure bar	1	1	1	1	1	0.05	1	1	0.08	1	1

Table 2-2. Streams properties of the retrofitted design.

	FAME	GLY	H3PO4	METH	NAOH	OIL	R1	R2	R3	S1	S2	S3
Mass Flow kg/hr												
METHANOL	23.15	5.79	0.00	1132.14	0.00	0.00	0.00	0.00	1039.04	0.00	2171.18	1139.85
OIL	143.49	0.00	0.00	0.00	0.00	9643.57	356.38	356.37	0.00	9999.94	9999.94	500.00
FAME	9542.06	0.03	0.00	0.00	0.00	0.00	140.00	140.00	0.00	140.00	140.00	9683.20
GLYCEROL	0.00	972.13	0.00	0.00	0.00	0.00	0.00	0.00	0.00	0.00	0.00	988.08
NAOH	0.00	0.00	0.00	0.00	95.99	0.00	0.00	0.00	0.00	0.00	95.99	95.99
WATER	7.12	0.76	0.00	0.00	0.00	0.00	0.00	0.00	12.62	0.00	12.62	12.62
H3PO4	0.00	0.00	78.40	0.00	0.00	0.00	0.00	0.00	0.00	0.00	0.00	0.00
NA3PO4	0.00	0.00	0.00	0.00	0.00	0.00	0.00	0.00	0.00	0.00	0.00	0.00
Mass Frac												
METHANOL	0.0024	0.0059	0.0000	1.0000	0.0000	0.0000	0.0000	0.0000	0.9880	0.0000	0.1748	0.0918
OIL	0.0148	0.0000	0.0000	0.0000	0.0000	1.0000	0.7180	0.7180	0.0000	0.9862	0.8052	0.0403
FAME	0.9821	0.0000	0.0000	0.0000	0.0000	0.0000	0.2820	0.2820	0.0000	0.0138	0.0113	0.7797
GLYCEROL	0.0000	0.9933	0.0000	0.0000	0.0000	0.0000	0.0000	0.0000	0.0000	0.0000	0.0000	0.0796
NAOH	0.0000	0.0000	0.0000	0.0000	1.0000	0.0000	0.0000	0.0000	0.0000	0.0000	0.0077	0.0077
WATER	0.0007	0.0008	0.0000	0.0000	0.0000	0.0000	0.0000	0.0000	0.0120	0.0000	0.0010	0.0010
H3PO4	0.0000	0.0000	1.0000	0.0000	0.0000	0.0000	0.0000	0.0000	0.0000	0.0000	0.0000	0.0000
NA3PO4	0.0000	0.0000	0.0000	0.0000	0.0000	0.0000	0.0000	0.0000	0.0000	0.0000	0.0000	0.0000
Total Flow kg/hr	9715.81	978.70	78.40	1132.14	95.99	9643.57	496.38	496.37	1051.66	10139.94	12419.74	12419.74
Temperature C	48.23	100.00	25.00	25.00	25.00	25.00	297.70	25.00	64.64	25.00	29.49	60.00
Pressure bar	0.08	0.05	1	1	1	1	0.18	1	1	1	1	4

	S4	S5	S6	S7	S8	S9	S10	SOLIDS	VAPOR	WATER	WATOUT
Mass Flow kg/hr											
METHANOL	1139.85	94.93	1044.92	1044.92	1044.92	1039.12	1039.12	0.00	71.78	0.00	0.08
OIL	500.00	500.00	0.00	0.00	0.00	0.00	0.00	0.00	0.14	0.00	0.00
FAME	9683.20	9682.06	1.14	1.14	1.14	1.12	1.12	0.00	0.00	0.00	1.12
GLYCEROL	988.08	0.00	988.08	988.08	988.08	15.96	15.96	0.00	0.00	0.00	15.96
NAOH	95.99	0.00	95.99	0.00	0.00	0.00	0.00	0.00	0.00	0.00	0.00
WATER	12.62	33.34	121.28	164.51	164.51	163.76	163.76	0.00	26.22	142.00	151.14
H3PO4	0.00	0.00	0.00	0.00	0.00	0.00	0.00	0.00	0.00	0.00	0.00
NA3PO4	0.00	0.00	0.00	131.15	0.00	0.00	0.00	131.15	0.00	0.00	0.00
Mass Frac											
METHANOL	0.0918	0.0092	0.4641	0.4485	0.4753	0.8518	0.8518	0.0000	0.7314	0.0000	0.0005
OIL	0.0403	0.0485	0.0000	0.0000	0.0000	0.0000	0.0000	0.0000	0.0014	0.0000	0.0000
FAME	0.7797	0.9391	0.0005	0.0005	0.0005	0.0009	0.0009	0.0000	0.0000	0.0000	0.0066
GLYCEROL	0.0796	0.0000	0.4389	0.4241	0.4494	0.0131	0.0131	0.0000	0.0000	0.0000	0.0949
NAOH	0.0077	0.0000	0.0426	0.0000	0.0000	0.0000	0.0000	0.0000	0.0000	0.0000	0.0000
WATER	0.0010	0.0032	0.0539	0.0706	0.0748	0.1342	0.1342	0.0000	0.2671	1.0000	0.8980
H3PO4	0.0000	0.0000	0.0000	0.0000	0.0000	0.0000	0.0000	0.0000	0.0000	0.0000	0.0000
NA3PO4	0.0000	0.0000	0.0000	0.0563	0.0000	0.0000	0.0000	1.0000	0.0000	0.0000	0.0000
Total Flow kg/hr	12419.74	10310.33	2251.41	2329.81	2198.66	1219.96	1219.96	131.15	98.14	142.00	168.30
Temperature C	60.11	60.37	60.18	50.00	50.00	100.00	80.00	50.00	48.23	25.00	100.19
Pressure bar	1	1	1	1	1	0.05	1	1	0.08	1	1

2.4. Results and Discussions

2.4.1. Column T101

Table 2-3 shows the base case design (Design 1) operating conditions and design parameters for distillation column T101, which operates with four equilibrium stages. Fig. 2-3a shows the stage-enthalpy deficit curves for the base case design produced by the Aspen Plus simulator. These enthalpy deficit curves compare the cumulative heating and cooling requirements in actual and ideal operations at PNMTC. The horizontal gap

between the temperature-enthalpy CGCC pinch points and the ordinate (temperature axis), shown in Fig. 2-3b, represents the scope for reduction in heat duties through decreasing reflux ratio. The reflux ratio is reduced from 2.0 to 1.0. According to Fig. 2-3a, no feed conditioning needed because no sharp enthalpy change displayed.

Table 2-3. Comparison of operating conditions and configurations of designs 1 and 2 for distillation column T101.

Conditions & Configurations	**Design 1 (base case)**	**Design 2 (retrofitted)**
No. of stages	4	4
Feed stage	2	2
Feed temperature, ^{o}C	60.40	60.37
Reflux ratio	2	1
Condenser duty, kW	-6068.67	-4081.06
Distillate rate, kmol/hr	36.97	37.09
Condenser temperature, ^{o}C	53.67	49.98
Reboiler duty, kW	6143.57	4135.89
Boilup rate, kmol/hr	189.28	127.79
Bottoms rate, kmol/hr	0.88	0.87
Reboiler temperature, ^{o}C	297.91	297.70

Fig. 2-3c compares the CGCCs for the base case and retrofitted designs. The actual and ideal profiles are closer to each other after the retrofits. Fig. 2-3d compares the exergy loss profiles for design 1 and design 2. The reduction in the total exergy loss or the recovered available energy is 31.03% as the total exergy loss is reduced from 2389.21 kW in base case to 1647.76 kW in retrofitted design. Table 2-3 compares the base case design and retrofitted design column configurations and operating conditions of column T101. The condenser duty decreased from 6,068.67 kW to 4,081.06 kW and a reboiler

duty decreased from 6,143.57 kW to 4135.89 kW. Additional side reboiler or condenser is not feasible due to small number of stages.

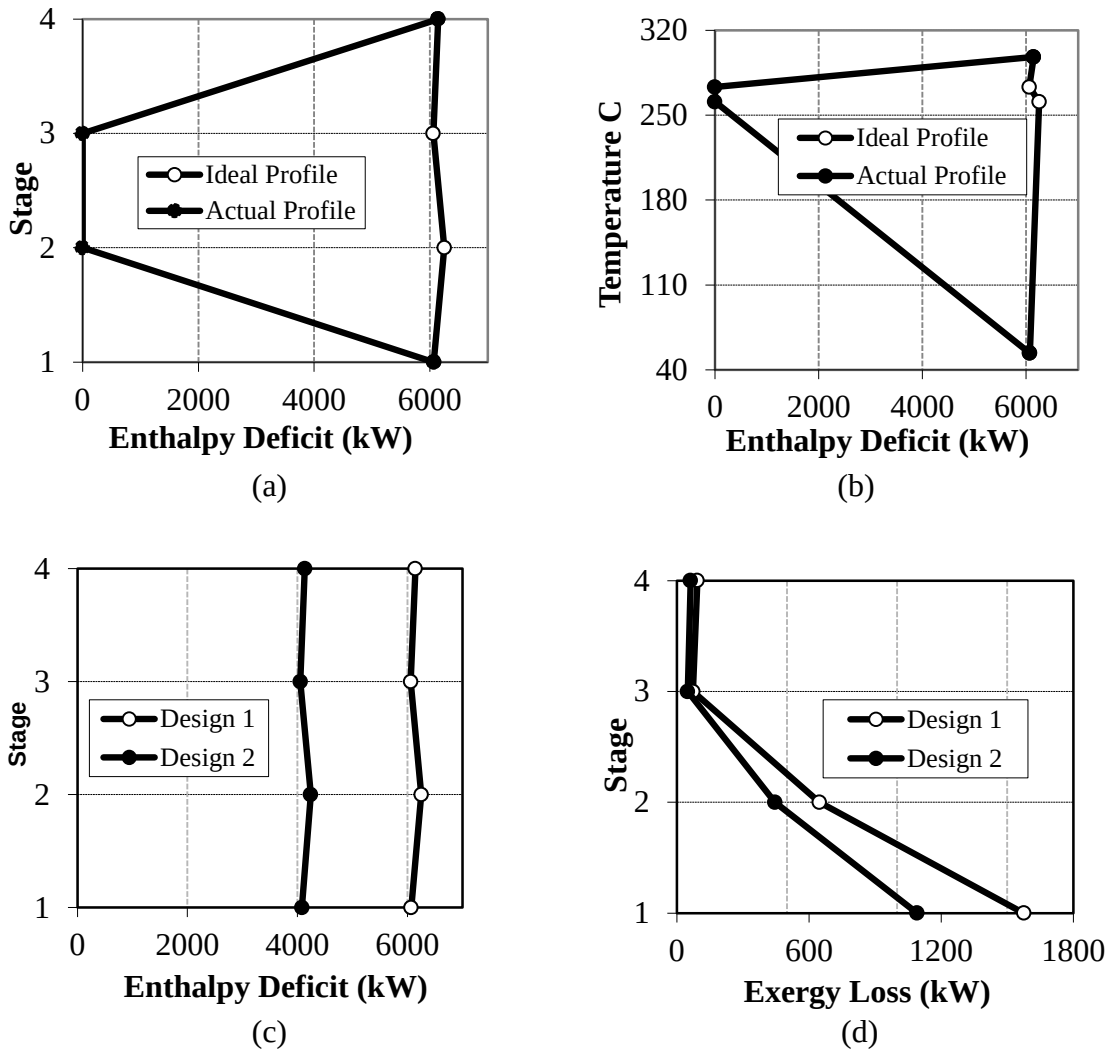

Fig. 2-3. Column T101: (a) base case stage-enthalpy deficit curves; (b) base case temperature-enthalpy deficit curves; (c) comparison of the stage-enthalpy deficit curves of base case and retrofitted designs; (d) comparison of stage-exergy loss profile of base case and retrofitted designs.

2.4.2. Column T102

As Table 2-4 shows, base case design of distillation column T102 has 12 stages, and operates with a total condenser and with a reflux ratio of 2. The feed is introduced on stage 9. Aspen Plus NQ curves yield an optimum reflux ratio of 1.59 and an optimum feed stage nine with the condenser duty and reboiler duty of 844.93 kW and 424.41 kW, respectively. Two design specifications are required in Column T302 to generate NQ curves as shown in Table 2-5 because it contains two product streams, distillate and bottom. The first design specification sets the mass purity of methanol in stream R3 to 0.988 while the second design specification sets the temperature of the reboiler (stage 12) to 100.190282^{o}C.

Table 2-4. Comparison of operating conditions and configurations of designs 1 and 2 for distillation column T102.

Conditions & Configurations	**Design 1 (base case)**	**Design 2 (retrofitted)**
No. of stages	12	12
Feed stage	9	9
Feed temperature, ^{o}C	80	80
Reflux ratio	2	1.59
Condenser duty, kW	-976.69	-844.93
Distillate rate, kmol/hr	33.09	33.13
Condenser temperature, ^{o}C	64.53	64.64
Reboiler duty, kW	552.23	424.41
Boilup rate, kmol/hr	48.80	37.50
Bottoms rate, kmol/hr	9.00	8.57
Reboiler temperature, ^{o}C	100.18	100.19
Stage 4 temperature, ^{o}C	66.23	71.21
Stage 8 temperature, ^{o}C	79.15	90.63

Table 2-5. Column T102 design specifications and NQ curves.

Design specifications

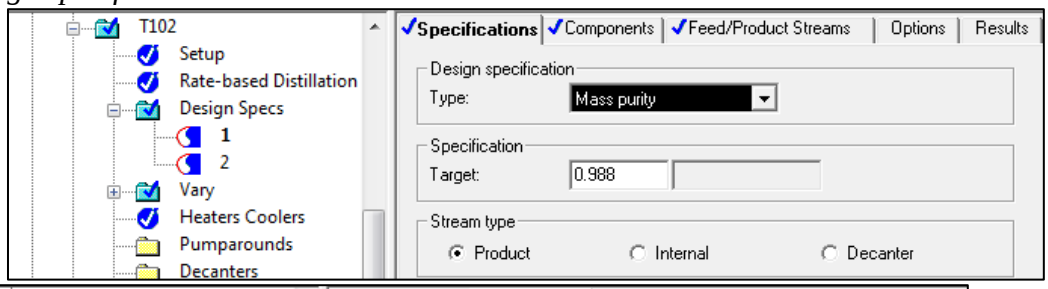

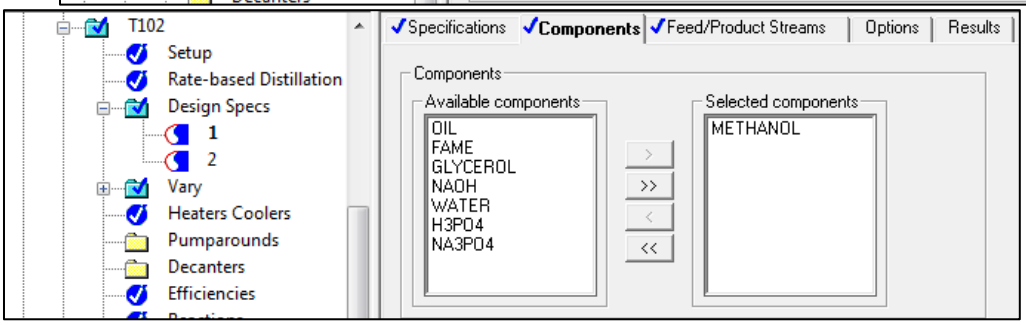

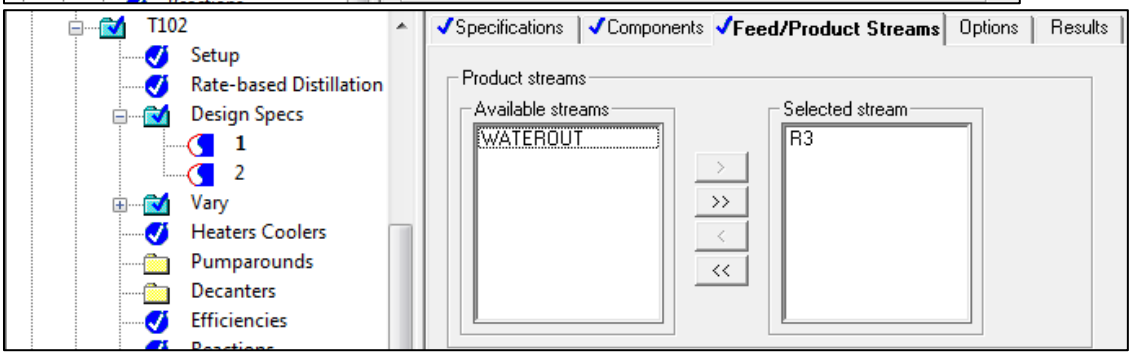

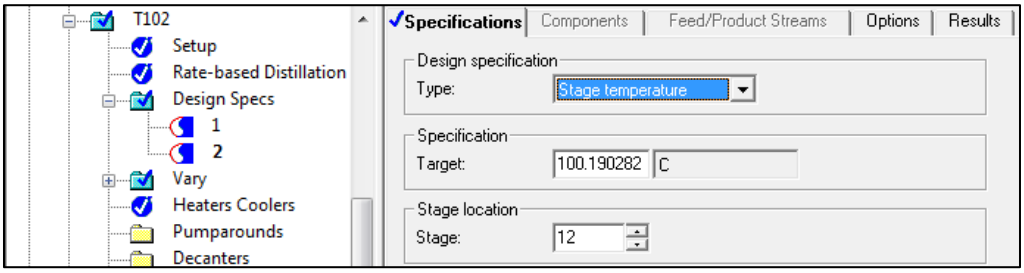

Vary

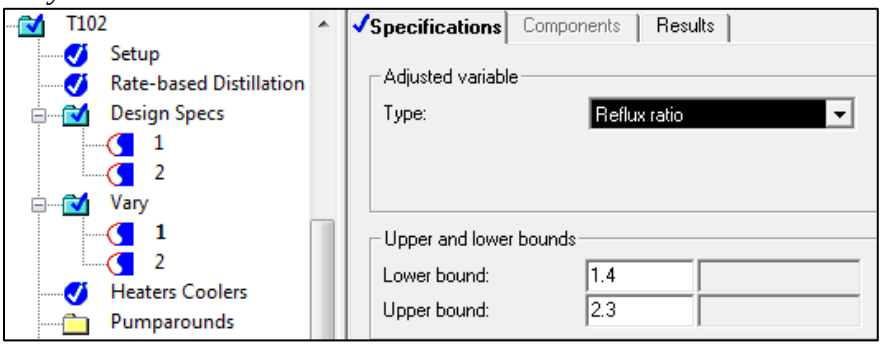

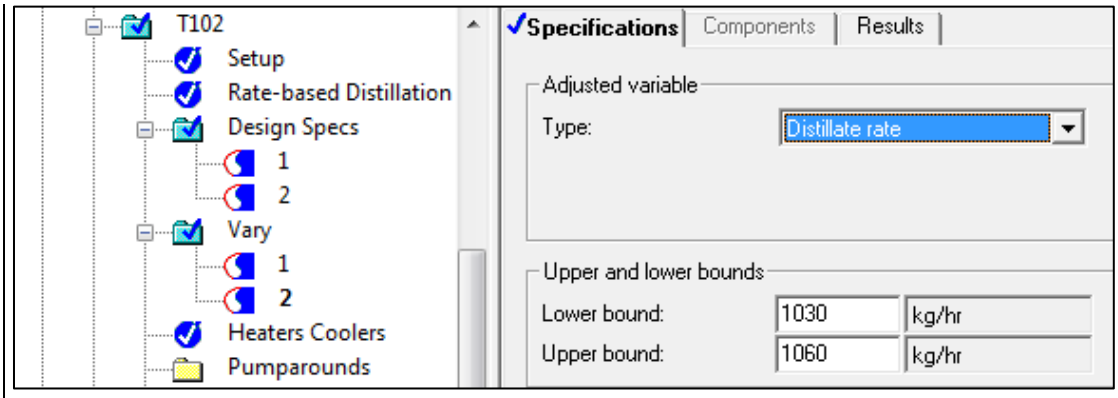

NQ curves

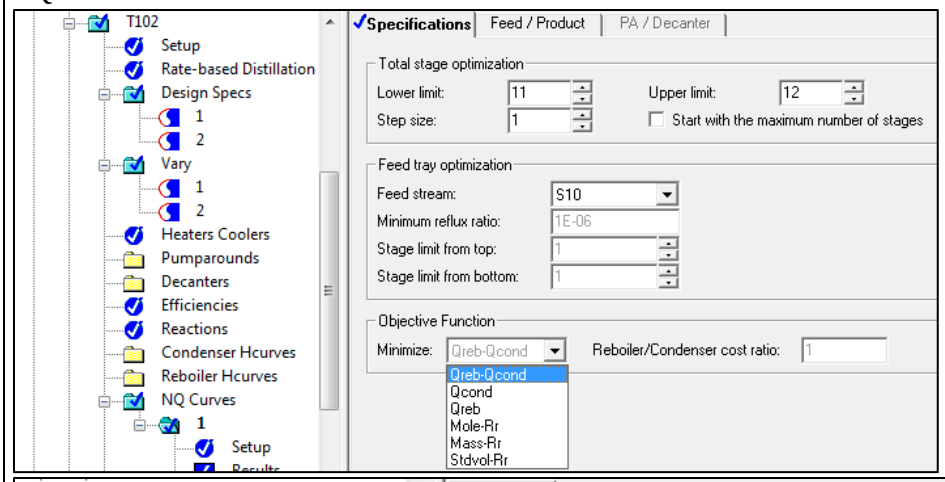

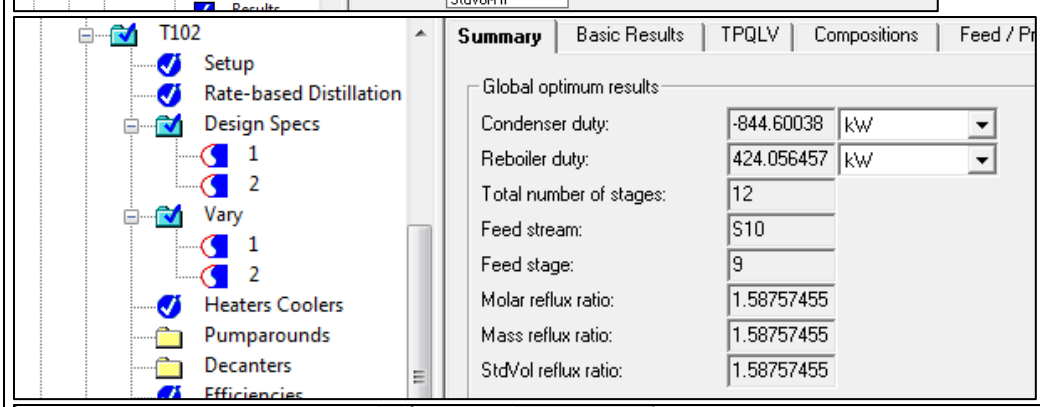

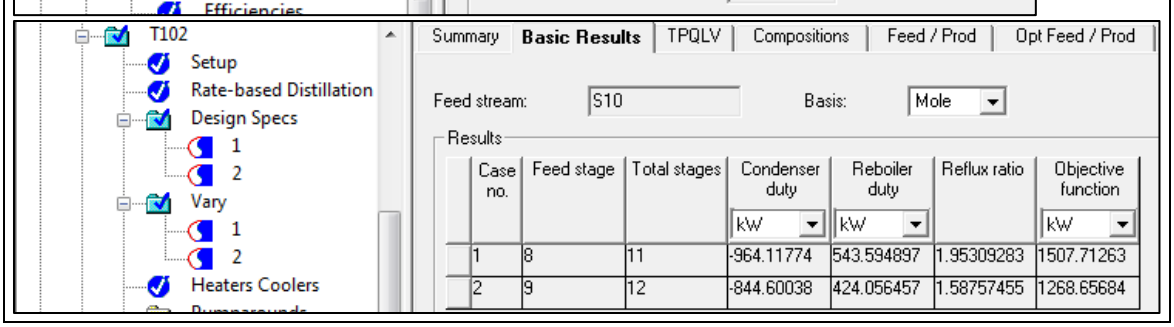

Case no.	Feed stage	Total stages	Condenser duty (kW)	Reboiler duty (kW)	Reflux ratio	Objective function (kW)
1	8	11	-964.11774	543.594897	1.95309283	1507.71263
2	9	12	-844.60038	424.056457	1.58757455	1268.65684

The feed stream S10 at temperature of 80.0^{o}C enter column T102 at stage 9. With the modifications using NQ curves, the total reboiler duty decreases by 23.15%, from 552.23 kW to 424.41 kW. Fig. 2-5c compares the stage-enthalpy deficit curves for designs 1 and 2.

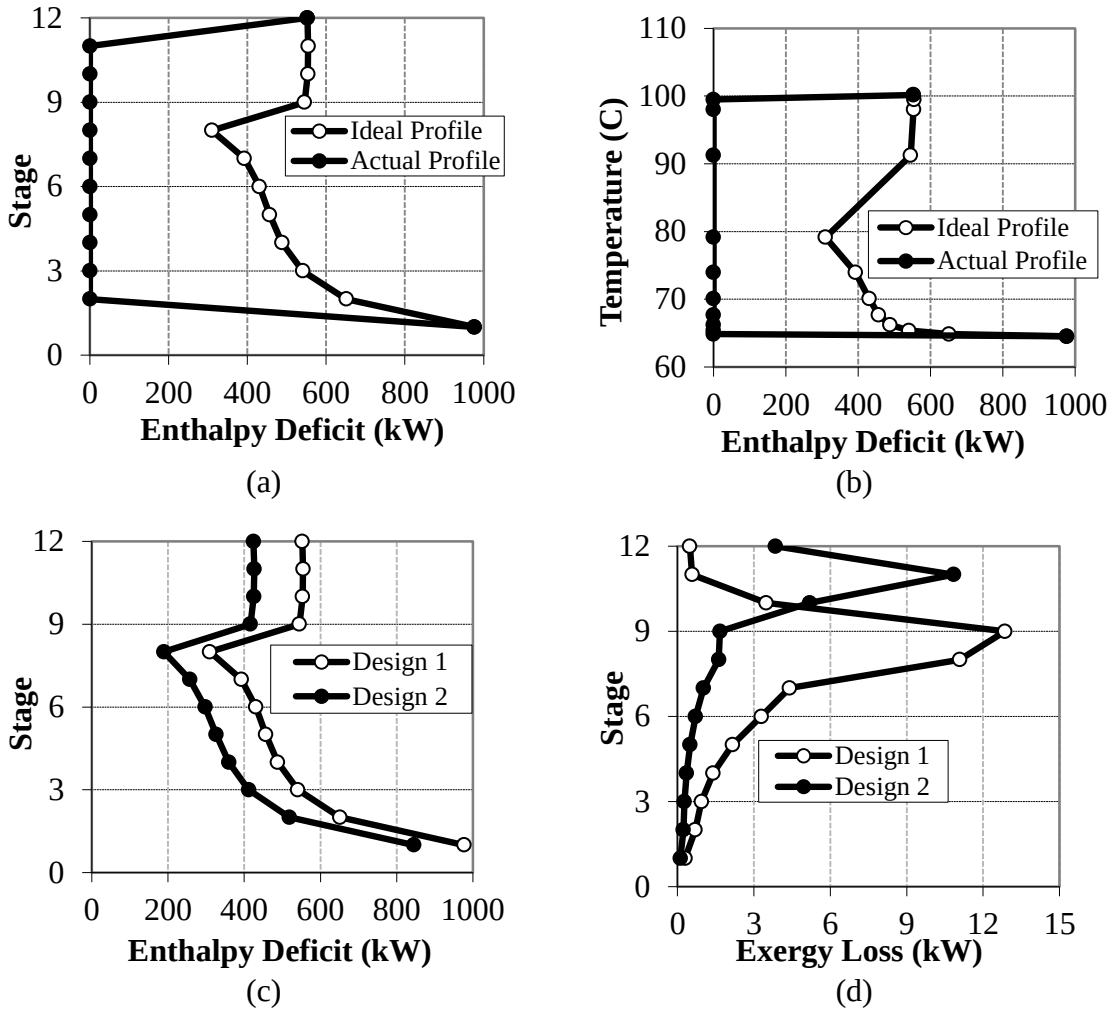

Fig. 2-4. Column T302: (a) base case stage-enthalpy deficit curves; (b) temperature-enthalpy deficit curves; (c) comparison of the stage-enthalpy deficit curves of base case and retrofitted designs; (d) comparison of the stage-exergy loss profile of base case design and retrofitted design.

Fig. 2-5d compares the exergy loss profiles in design 1 and design 2. The base case design operates with a large exergy losses at the feed stage and stage 10, while other stages have the smaller exergy losses. The retrofits reduce the total exergy losses by about 36.73%, from 41.66 kW in design 1 to 26.36 kW in design 2. This is also reflected through the more uniform exergy loss distributions in design 2, which are in line with the equipartition principle [21,22]. Table 2-4 compares the operating conditions and column configurations of designs 1 and 2. A total exergy reduction of 756.75 kW was obtained in the two retrofitted distillation columns. The overall exergy loss decreased to 1674.12 kW from 2430.87 kW, which shows that the retrofits are effective and save a considerable amount of energy.

2.5. Conclusions

This study presents retrofitted distillation columns of a conventional biodiesel production plant by using thermodynamic analysis, which produces column grand composite curves and exergy loss profiles. Thermodynamic analysis can assess an existing operation and suggest retrofits. The retrofits consist of reflux ratio modification for distillation column T101 and NQ curves analysis for distillation column T102. Effectiveness of the retrofits has been assessed by the improved column grand composite curves and exergy loss profiles. The total exergy loss for the columns is reduced from 2430.87 kW to 1674.12 kW, which indicates a considerable saving in the available energy.

Nomenclature

$\dot{D}$	Distillate flow rate, kmol/h
e_x	Molar exergy, kW/kmol
E_x	Total exergy, kW
$\dot{F}$	Feed flow rate, kmol/h
h	Enthalpy, kJ/kmol
H	Total enthalpy, kJ
$\dot{Q}$	Heat flow (heat transfer rate), kW
$\dot{L}$	Liquid flow rate, kmol/h
$\dot{n}$	Molar flow rate, kmol/h
$\dot{Q}_C$	Condenser duty, kW
$\dot{Q}_R$	Reboiler duty, kW
R	Reflux ratio
s	Molar entropy, kJ/kmol K
T	Temperature, K
x	Liquid mole fraction
y	Vapor mole fraction
$\dot{V}$	Vapor flow rate, kmol/h
$\dot{W}$	Work, kW

Greek Symbols

λ	Heat of vaporization, kJ/kmol

Subscripts

def	Deficit
D	Distillate
L	Liquid
V	Vapor
min	Minimum

R	Reboiler
s	stream, shaft

References

1. Zhang, Y., Dube, M.A., McLean, D.D., et al. 2003. Biodiesel production from waste cooking oil: 2. Economic assessment and sensitivity analysis. Bioresour. Technol. 90, 229-240.

2. Kapilakarn, K., Peugtong, A. 2007. A comparison of cost of biodiesel production from transesterification. Int Energy J 8, 1-6.

3. Bandyopadhyay, S., Malik, R.K., Shenoy, U.V. 1998. Temperature-enthalpy curve for energy targeting of distillation columns. Comput Chem Eng 22, 1733-1744.

4. Demirel, Y. 2006. Retrofit of distillation columns using thermodynamic analysis. Sep Sci Technol 41, 791-817.

5. Dhole, V.R., Linnhoff, B. 1993. Distillation column targets. Comp Chem Eng 17, 549-560.

6. Demirel, Y. 2004. Thermodynamic analysis of separation systems. Sep Sci Technol 39, 3897-3942.

7. Aspen Engineering Suite, 2004. www.aspentech.com.

8. Al-Muslim, H., Dincer, I. 2005. Thermodynamic analysis of crude oil distillation systems. Int J Energy Res 29, 637-55.

9. Rivero, R., Garcia, M., Urquiza, J. 2004. Simulation, exergy analysis and application of diabatic distillation to a tertiary amyl methyl ether production unit of a crude oil refinery. Energy 29, 467-89.

10. Araújo, A.B., Brito, R.P., Vasconcelos, L.S. 2003. Exergetic analysis of distillation processes-A case study. Energy 32, 1185-1193.

11. Al-Muslim, H., Dincer, I., Zubair, S.M. 2003. Exergy analysis of single-and two-stage crude oil distillation units. J. Energy Resource Technol 125, 199-208.

12. Agrawal, R., Herron, D.M. 1998. Efficient use of an intermediate reboiler or condenser in a binary distillation. AIChE J 44, 1303-1315.

13. Bandyopadhyay, S. 2002. Effect of feed on optimal thermodynamic performance of a distillation column. Chem Eng J 88, 175-186.

14. Rivero, R. 2001. Exergy simulation and optimization of adiabatic and diabatic binary distillation. Energy 26, 561-593.

15. De Koeijer, G.M., Rivero, R. 2003. Entropy production and exergy loss in experimental distillation columns. Chem Eng Sci 58, 1587-97.

16. Demirel, Y. 2007. Nonequilibrium Thermodynamics transport and rate processes in physical, chemical and biological processes, 2nd ed. Amsterdam: Elsevier.

17. Demirel, Y., Sandler, S.I. 2004. Nonequilibrium thermodynamics in engineering and science. J Phys Chem 108, 31-43.

18. Chang, H., Li, Jr-W. 2005. A new exergy method for process analysis and optimization. Chem Eng Sci 60, 2771-2784.

19. Ognisty, T.P. 1995. Analyze distillation columns with thermodynamics. Chem Eng Prog 9, 40-46.

20. Cengel, Y.A., Boles, M.A. 2007. Thermodynamics: an engineering approach. 6th ed. New York: McGraw Hill.

21. Erik, S., Signe, K.R., Kristian, M.L. 1996. Equipartition of forces: A new principle for process design and optimization. Ind Eng Chem 35, 4147-4153.

22. Johannessen, E., Røsjorde, A. 2007. Equipartition of entropy production as an approximation to the state of minimum entropy production in diabatic distillation. Energy 32, 467-473.

23. Zhang, Y., Dube, M.A., McLean, D.D. 2003. Biodiesel production from waste cooking oil: 1. Process design and technological assessment. Bioresour Technol 89, 1-16.

24. Nguyen, N., Demirel, Y. 2010. Retrofit of distillation columns in biodiesel plants. Energy 35, 1625-2632.

25. Glinos, K., Malone, M.F. 1984. Minimum reflux, product distribution, and lumping rules for multicomponent distillation. Ind. Eng. Chem. Process Des. Dev. 23, 764-768.

26. Turton, R., Bailie, R.C., Whiting, W.B., et al. 2009. Analysis, Synthesis and Design of Chemical Processes, 3rd ed. New Jersey: Prentice Hall.

CHAPTER 3

Reactive Distillation Column for Esterification of Lauric Acid with Methanol: Equilibrium vs. Nonequilibrium Approaches

3.1. Introduction

Separation by distillation is energy intensive process. Fatty acid esterification by reactive distillation (RD) combines separation and reaction into a single vessel to minimize operation and equipment costs by decreasing waste and overcoming thermodynamic and chemical equilibrium limitations [1-4]. Usage of RD requires reaction to take place preferably in liquid-phase with a reasonably fast rate, temperature to occur within the suitable separation range, and components with suitable relative volatilities [5].

The well-known equilibrium modeling uses MESH equations to model the equilibrium stages [6]. MESH equations consist of material balances, equilibrium relationships, summation equations, and heat or enthalpy balances. Efficiency approximations are used to compensate for deviation from equilibrium. Equilibrium modeling dominated during last few decades due to their straightforward mathematical modeling. In reality, separation depends on the heat and mass transfer rates between liquid and vapor phases and a more sophisticated nonequilibrium modeling is more suitable to describe the separation process [7-9]. Nonequilibrium modeling uses MERSHQ equations, which composed of material balances, energy balances, heat and

mass transfer rate equations, summation equations, hydraulic equations, and equilibrium equations. The results obtained from the equilibrium-based model are used as the initial guess to solve the MERSHQ equations.

Currently, transesterification and esterification reactions use homogenous catalyst, such as sulfuric acid or sodium hydroxide depending on the concentration of fatty acid [10]. The optimum molar ratio of methanol to oil is about 6:1. However, using homogenous catalyst requires additional steps to remove the catalyst [11]. Previous studied by Omota group [2] suggests that using sulfated zirconia may be one of the most suitable catalysts for reactive distillation application. Sulfate zirconia structure is very robust and activity remains high even at high methanol/oil ratio. The operation temperature of sulfate zirconia occurs between 130 and 200°C, which where the separation of the water and ester occur. Almost completion conversion can be achieved when the reaction proceeds for less than one hour [12]. This heterogeneous catalyst exhibits similar catalytic strength to sulfuric acid but it is more environmentally friendly [13,14].

3.2. Methods and Approaches

3.2.1. Simulation

Aspen Plus simulation package is used to design, develop, and simulate a biodiesel production process using reactive distillation column based on esterification of lauric acid with methanol reaction. Calculation method based on equilibrium and nonequilibrium (rate-based) models is used in this simulation. Sensitivity analysis is used

to evaluate the effect of changes in input variables on the process outputs to determine the optimal operating conditions.

3.2.2. Reactive Distillation

Reactive distillation combines separation and reaction into a single vessel to minimize operation and equipment costs by decreasing waste and overcoming thermodynamic and chemical equilibrium limitations. The continuous removal of the products from the reaction zone drove the reversible reaction toward the product side. In this study, nonequilibrium modeling is used to make the simulation more realistic. The nonequilibrium design is better than equilibrium design, which fit the real performance of the separation processes by using various types of corrections. RD column contain a rectifying section locates at the top, stripping section locates at the bottom and reaction zone locates at the middle of the column as shown in Fig. 3-1 [15].

For example, we have a reaction $A+B \rightarrow C+D$, and B is a more volatile reactant. Then B should be fed into the lower section of the reaction zone while the heavier reactant A should be sent into the upper section of the reaction zone. As component A flows up the column, it reacts with descending B. The rectifying sections used to purify the light product C. The stripping sections used to separate the heavy product D as shown in Fig. 3-1. However, usage of reactive distillation requires that the reaction temperature must occur within the separation zone temperature, the relative volatility of the reactants must be reasonable, that is, they must spend enough time in the column for the reaction to

proceed, and the reaction rate must be fast and preferably in the liquid phase due to low residence time in the vapor phase.

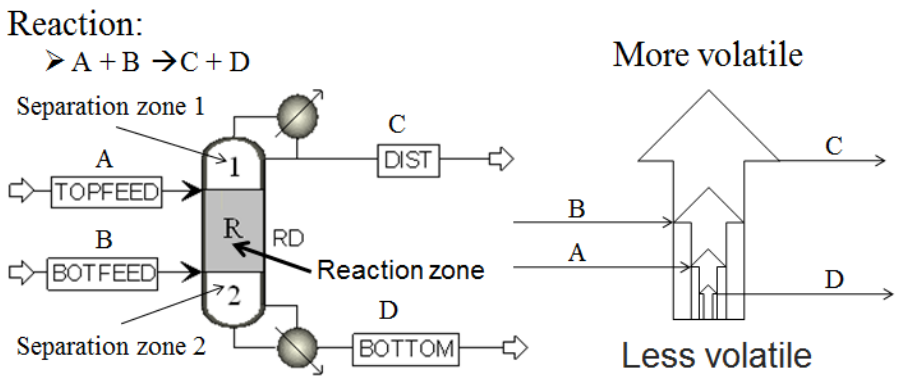

Fig. 3-1. Reactive distillation for a reaction A+B$\rightarrow$C+D.

3.2.2.1. Esterification of Lauric Acid Reaction

Esterification of lauric acid with methanol may be described by

$$\text{Methanol + Lauric Acid} \xrightarrow{\text{SZr}} \text{Ester (Biodiesel) + Water}$$

The rate expression $r = kC_MC_L$ is used for esterification of lauric acid with methanol, where r is the reaction rate, k is the rate coefficient and C_M and C_L are the concentrations of methanol and lauric acid, respectively. The rate coefficient is $k = 1.2\times10^5\exp(-55{,}000/RT)$. The units for reaction rate, concentration, and activation energy are kmol/(m^{3}h), kmol/m^3, and kJ/kmol, respectively [3]. The reverse hydrolysis reaction is assumed negligible. However, further investigation may be required to validate this assumption.

3.2.3. Equilibrium Model and Nonequilibrium Model

Equilibrium modeling uses MESH equations to approximate the behavior of chemicals in a distillation column. MESH equations compose of material balances, equilibrium relationships, summation equations, and heat or enthalpy balances. In contrast, nonequilibrium modeling uses MERSHQ equations, which composed of material balances, energy balances, heat and mass transfer rate equations, summation equations, hydraulic equations, and equilibrium equations. In bulk liquid, the material balance is [6]

$$F_j^L x_{ij}^F + L_{j-1} x_{ij-1} + N_{ij}^L + r_{ij}^L - L_j x_{ij} = 0 \qquad 3\text{-}1$$

where F is the feed molar flow rate, x is the bulk liquid mole fraction, L is the liquid molar flow rate, N is the mass transfer rate, and r is the reaction rate. The superscripts L and F are the liquid and feed. The subscripts i and j symbols represent component and stage, respectively. The material balance for bulk vapor is

$$F_j^V y_{ij}^F + V_{j+1} y_{ij+1} + N_{ij}^V + r_{ij}^V - V_j y_{ij} = 0 \qquad 3\text{-}2$$

Here y and V are the bulk vapor mole fraction and vapor molar flow rate, respectively. Superscript V is the vapor. In liquid and vapor films, the material balances are calculated by

$$N_{ij}^I + r_{ij}^{fL} - N_{ij}^L = 0 \qquad 3\text{-}3$$

$$N_{ij}^V + r_{ij}^{fV} - N_{ij}^I = 0 \qquad 3\text{-}4$$

where the superscripts I and f are the interface and film, respectively. If there is no reaction occurred, the flow rate of the interface is equal to the flow rate of the liquid. Energy balances for bulk liquid and vapor are

$$F_j^L H_j^{FL} + L_{j-1} H_{j-1}^L + Q_j^L + q_j^L - L_j H_j^L = 0 \qquad 3\text{-}5$$

$$F_j^V H_j^{FV} + V_{j+1} H_{j+1}^V + Q_j^V - q_j^V - V_j H_j^V = 0 \qquad 3\text{-}6$$

Here H is the enthalpy, Q is the heat input to stage, and q is the heat transfer rate. Energy balances for the liquid and vapor films are [16]

$$q_j^I - q_j^L = 0 \qquad 3\text{-}7$$

$$q_j^V - q_j^I = 0 \qquad 3\text{-}8$$

The rate of energy transfer (q) from liquid and/or vapor must equal to the energy transfer from the interface at equilibrium. In nonequilibrium calculations, the vapor and liquid are assumed at equilibrium at the interface

$$y_{ij}^I - K_{ij} x_{ij}^I = 0 \qquad 3\text{-}9$$

where K is the equilibrium ratio. Regardless of phases, the sum of the mole fractions is equal to 1 [16]

$$\sum_{i=1}^{n} x_{ij} - 1 = 0 \qquad 3\text{-}10$$

$$\sum_{i=1}^{n} y_{ij} - 1 = 0 \qquad 3\text{-}11$$

$$\sum_{i=1}^{n} x_{ij}^{I} - 1 = 0 \qquad 3\text{-}12$$

$$\sum_{i=1}^{n} y_{ij}^{I} - 1 = 0 \qquad 3\text{-}13$$

Mass flux for liquid film and vapor film are [17]

$$\left[\Gamma_j^L\right]\left(x_j^I - x_j\right) + \Delta\phi_j^E\left(x_j z_j\right) - \left[R_j^L\right]\left(N_j^L - N_t^L x_j\right) = 0 \qquad 3\text{-}14$$

$$\left[\Gamma_j^V\right]\left(y_j^I - y_j\right) + \left[R_j^V\right]\left(N_j^V - N_t^V y_j\right) = 0 \qquad 3\text{-}15$$

where Γ is the matrix of thermodynamic factors, $\Delta\phi^E$ is the driving force caused by electric potential, and *R* is the inverse of the mass transfer coefficient matrix. Equations 3-14 and 3-15 calculate bulk properties for each phase by using mixed flow model from outlet conditions. Otherwise, the bulk properties can be calculated using the average of outlet and inlet conditions by other flow models. Γs are calculated by [16]

$$\Gamma_{i,k,j}^{L} = \delta_{i,k} + x_{ij} \left.\frac{\partial \ln \varphi_{ij}^{L}}{\partial x_{ij}}\right|_{T_j^L, P_j, \Sigma} \qquad 3\text{-}16$$

$$\Gamma_{i,k,j}^{V} = \delta_{i,k} + y_{ij} \left.\frac{\partial \ln \varphi_{ij}^{V}}{\partial y_{ij}}\right|_{T_j^V, P_j, \Sigma} \qquad 3\text{-}17$$

The Σ symbol represents partial differentiation, which is fixing other moles fraction of all other components while evaluating the *n*th component. φ is the fugacity coefficient and $\delta_{i,k}$ is the Kronecker delta: 1 if i=k, 0 otherwise. The inverse of the mass transfer coefficient (*R*) matrix are evaluate by the following equations [16]

$$R_{i,i,j}^{L} = \frac{x_{ij}}{\bar{\rho}_j^L a_j^I k_{i,n,j}^L} + \sum_{\substack{m=1 \\ m \neq j}}^{n} \frac{x_{mj}}{\bar{\rho}_j^L a_j^I k_{i,m,j}^L} \quad \text{for } i = 1,\ldots,n\text{-}1 \qquad \text{3-18}$$

$$R_{i,k,j}^{L} = -x_{ij}\left(\frac{1}{\bar{\rho}_j^L a_j^I k_{i,k.j}^L} - \frac{1}{\bar{\rho}_j^L a_j^I k_{i,n,j}^L} \right) \text{ for } i = 1,\ldots,n-1, i \neq k \qquad \text{3-19}$$

$$R_{i,i,j}^{V} = \frac{y_{ij}}{\bar{\rho}_j^V a_j^I k_{i,n,j}^V} + \sum_{\substack{m=1 \\ m \neq j}}^{n} \frac{y_{mj}}{\bar{\rho}_j^V a_j^I k_{i,m,j}^V} \quad \text{for } i = 1,\ldots,n\text{-}1 \qquad \text{3-20}$$

$$R_{i,k,j}^{V} = -y_{ij}\left(\frac{1}{\bar{\rho}_j^V a_j^I k_{i,k.j}^V} - \frac{1}{\bar{\rho}_j^V a_j^I k_{i,n,j}^V} \right) \text{ for } i = 1,\ldots,n-1, i \neq k \qquad \text{3-21}$$

where $\bar{\rho}$ is the molar density, a^I is interfacial area for mas transfer, and k is the mass transfer coefficient. Heat flux for liquid film and vapor film are [16]

$$a_j^I h_j^L \left(T_j^I - T_j^L\right) - q_j^L + \sum_{i=1}^{n} N_{ij}^L \bar{H}_{ij}^L = 0 \qquad \text{3-22}$$

$$a_j^I h_j^V \left(T_j^V - T_j^I\right) - q_j^V + \sum_{i=1}^{n} N_{ij}^V \bar{H}_{ij}^V = 0 \qquad \text{3-23}$$

Here h is the heat transfer coefficient, T is the temperature, N is the mass transfer rate, and $\bar{H}$ is the partial enthalpy. For sieve trays, the mass transfer coefficients are approximate by using Chen and Chuang correlation [18]

$$k_{i,k}^L = \frac{14 A_b}{\left(\mu^L\right)^{0.1} \phi^{0.14}} \left(\frac{\rho_t^L F_t^2}{\sigma^2} \right)^{1/3} \sqrt{D_{i,k}^L t_L} \left(\frac{\rho_t^V}{\rho_t^L} \right) \frac{u_s^V}{a^I} \qquad \text{3-24}$$

$$k_{i,k}^{V} = \frac{11A_b}{\left(\mu^L\right)^{0.1}\phi^{0.14}}\left(\frac{\rho_t^L F_t^2}{\sigma^2}\right)^{1/3}\sqrt{D_{i,k}^V t_V}\,\frac{u_s^V}{a^I} \qquad 3\text{-}25$$

where A_b is the total active bubbling area on the tray, μ^L is the viscosity of liquid, ϕ is the fractional hole area per unit bubbling area, D is the diffusitivity, u_s^V is the superficial velocity for the vapor, σ is the liquid surface tension, and t is the average residence time. This correlation is designed to work with the Zuiderweg correlation for interfacial area. It does not calculate its own interfacial area. The heat transfer coeficients (h) are calculated by Chilton and Colburn method [19]

$$h^L = \bar{k}^L \bar{\rho}^L C_P^L\left(\frac{\lambda^L}{\bar{\rho}^L C_P^L \bar{D}^L}\right)^{2/3} \qquad 3\text{-}26$$

$$h^V = \bar{k}^V \bar{\rho}^V C_P^V\left(\frac{\lambda^V}{\bar{\rho}^V C_P^V \bar{D}^V}\right)^{2/3} \qquad 3\text{-}27$$

where $\bar{k}$ is the average mass transfer coefficient, C_p is the specific molar heat capacity, $\bar{D}$ is the average diffusitivity and λ is the thermal conductivity. The mass transfer coefficients and interfacial area for sieve trays are predicted by Zuiderweg correlation [20]

$$k_{i,k}^L = 0.024\left(D_{i,k}^L\right)^{0.25} \qquad 3\text{-}28$$

$$k_{i,k}^V = \frac{0.13}{\rho_t^V} - \frac{0.065}{\left(\rho_t^V\right)^2} \qquad 3\text{-}29$$

$$a^I = \begin{cases} \dfrac{40A_b}{\phi^{0.3}}\left(\dfrac{\left(u_s^V\right)^2 \rho_t^V h_L FP}{\sigma}\right)^{0.37} & \text{for the spray regime} \quad FP \le 3.0 l_w h_L / A_b \\ \dfrac{43A_b}{\phi^{0.3}}\left(\dfrac{\left(u_s^V\right)^2 \rho_t^V h_L FP}{\sigma}\right)^{0.53} & \text{for the mixed froth-emulsion regime} \quad FP > 3.0 l_w h_L / A_b \end{cases} \qquad 3\text{-}30$$

and l_w is the average weir length and the flow parameter (FP) is

$$FP = \frac{Q_L}{Q_V}\left(\frac{\rho_t^L}{\rho_t^L}\right)^{0.5} \qquad 3\text{-}31$$

where Q_L and Q_V are the total volumetric flow rate for the liquid and vapor, respectively.

3.3. Process Description and Simulation

Fig. 3-2 shows the reactive distillation column using methanol and lauric acid as basic feedstock to produce methyl dodecanoate and water. The column consists of 30 stages with two separation zones at each end and a reaction zone in the middle, and operates with a total condenser and a kettle reboiler. Stream LAURIC consists of 100 kmol/hr of lauric acid, which is heated to 100°C before entering top of the reaction zone of the column at stage 3. Stream METH consists of 199 kmol/hr of methanol and 1 kmol/hr of water, which is heated up close to methanol's saturation point and fed into the bottom of the reaction zone of the column at stage 29. The ester with a 104 kmol/hr flow rate is the bottom product, while the distillate is the mixture of water and methanol with a flow rate 196 kmol/hr. The activity coefficient model UNIQUAC is used to estimate the phase equilibrium in the column.

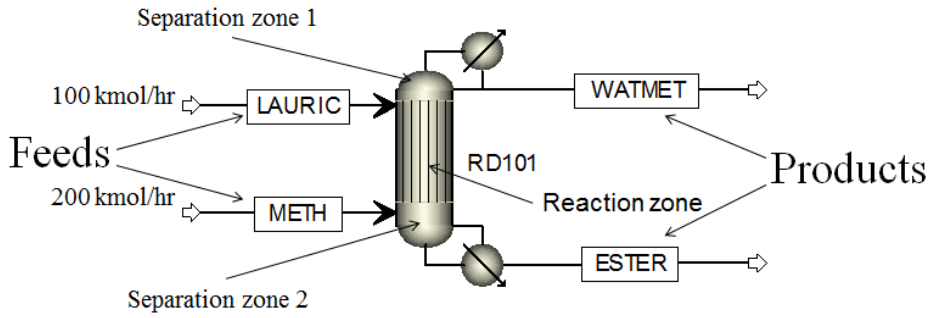

Fig. 3-2. Reactive distillation in the esterification of lauric acid with methanol [15].

The simulator of Aspen Plus is used to perform the simulation esterification of lauric acid with methanol. Lauric acid comes from coconut oil. The first phase of this work is to reduce the concentration of water in the reaction zone by adjusting the reflux ratio and duty of a side heater in an equilibrium design. The results are then used as initial input values for the nonequilibrium design. Under identical configurations and conditions, nonequilibrium design has yielded lower conversion due to complex heat and mass transfer rates between the vapor and liquid phases. Therefore, number of stages and pressure needed to be adjusted in order to achieve the same level of conversion. Table 3-1 shows how to input the reaction kinetic into Aspen Plus simulator. Users can use Fortran software to write their own user kinetic subroutine.

Table 3-1. Reaction kinetic input summary of reactive distillation column RD101.

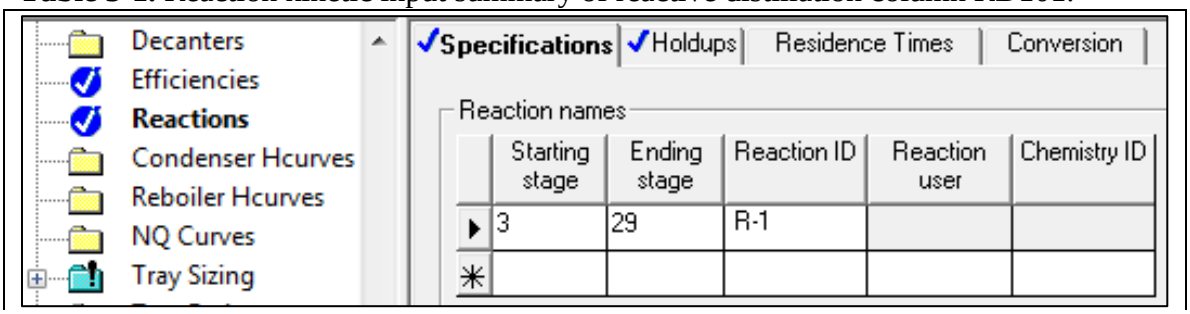

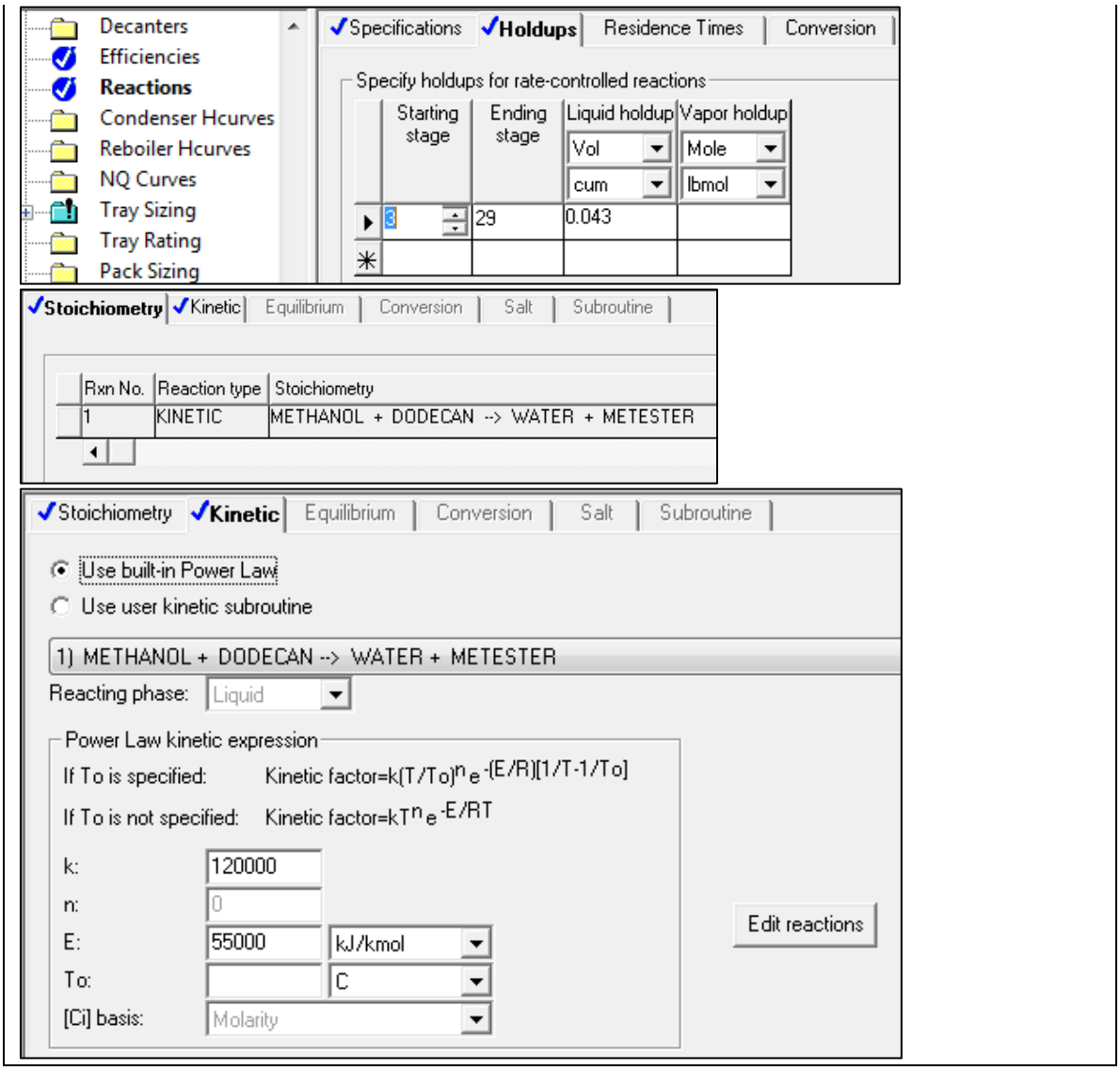

3.4. Results and Discussions

The reactive distillation column operating conditions and configurations are summarized in Table 3-2. The initial values used for this simulation are shown in equilibrium design 1. In equilibrium design 2, a side reboiler is added in addition to the modifications of feed temperature, molar reflux ratio, and column operating pressure. The modification of pressure is necessary to increase the conversion and to achieve

reasonable ester purity at the bottom product stream. Adjustments in molar reflux ratio and side reboiler are to remove water in the reaction zone, especially at stage 3, since this stage contains highest concentration of water which may cause activity reduction of the catalyst. Additional side reboiler results in less heat duty leading to more economical process due to lower operation temperature.

Table 3-2. Comparison of operating conditions and configurations of equilibrium and nonequilibrium designs for reactive distillation column RD101 [15].

Conditions & Configurations	Equilibrium-1	Equilibrium-2	Rate-based-1	Rate-based-2
Number of stages	30	30	30	35
Lauric acid feed stage	3	3	3	3
Methanol feed stage	29	29	29	34
Side reboiler stage	__	3	3	3
Side reboiler duty, kW	0	1200	1200	1200
Lauric feed temperature, ^{o}C	100	110	110	110
Methanol feed temperature, ^{o}C	90	100	100	100
Molar reflux ratio	1.5	0.7	0.7	0.7
Reaction stages	3-29	3-29	3-29	3-34
Distillate rate, kmol/hr	196	196	196	196
Bottom rate, kmol/hr	104	104	104	104
Bottom ester mass percent	90.23	99.19	95.40	99.17
Liquid holdup, cm^3	0.043	0.043	0.043	0.043
Condenser duty, kW	-5014.33	-3223.82	-3217.17	-3126.79
Condenser temperature, ^{o}C	107.92	142.29	141.79	155.39
Condenser pressure, bar	3.5	9.0	9.0	12.5
Reboiler duty, kW	7029.99	4930.54	4968.63	5343.56
Reboiler temperature, ^{o}C	224.36	274.34	277.01	297.39
Reboiler pressure, bar	4.0	9.5	9.5	13.0
Total Conversion, kmol/hr	90.19	99.78	95.70	99.75
Exergy loss, kW	1385.5	963.2		

The results of equilibrium design 2 are used as initial input values for rate-based design 1. Table 3-3 shows how to activate the rate-based calculations. The rate-based calculation type is selected instead of the equilibrium calculation type. Tray sizing block is activated to approximate the diameter of the trays. Column diameter approximated by sizing mode can be used to calculate hydraulic and performance information such as pressure drop, flooding approach and downcomer backup by using rating mode. The heat

transfer coefficient, mass transfer coefficient, and interfacial area are estimated using Chen and Chuang, Chilton and Colburn, and Zuiderweg correlation methods, respectively [6,7,9]. Film non-ideality correction is included in the rate-based calculations. The mass transfer equations are evaluate and use the matrix thermodynamic factors in equation 2.2.5 in Taylor and Krishna (1993) when this correction is activated [18]. This calculation is more computationally intensive but yields more accurate results. Under identical conditions and configurations, rate-based 1 design yields lower conversion as indicated in Table 3-2. Therefore, in rate-based design 2, the number of stages and pressure are adjusted in order to achieve the desirable conversion. The input summary and results of the column RD101 of the rate-based design 2 are presented in Tables C-1 and C-2, respectively.

Table 3-3. How to activate rate-based calculations in Aspen Plus.

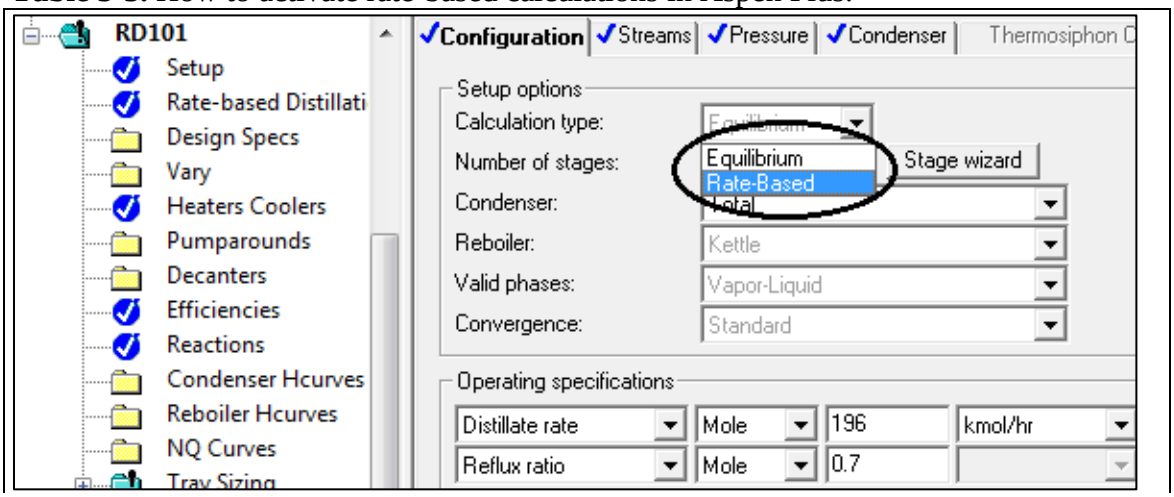

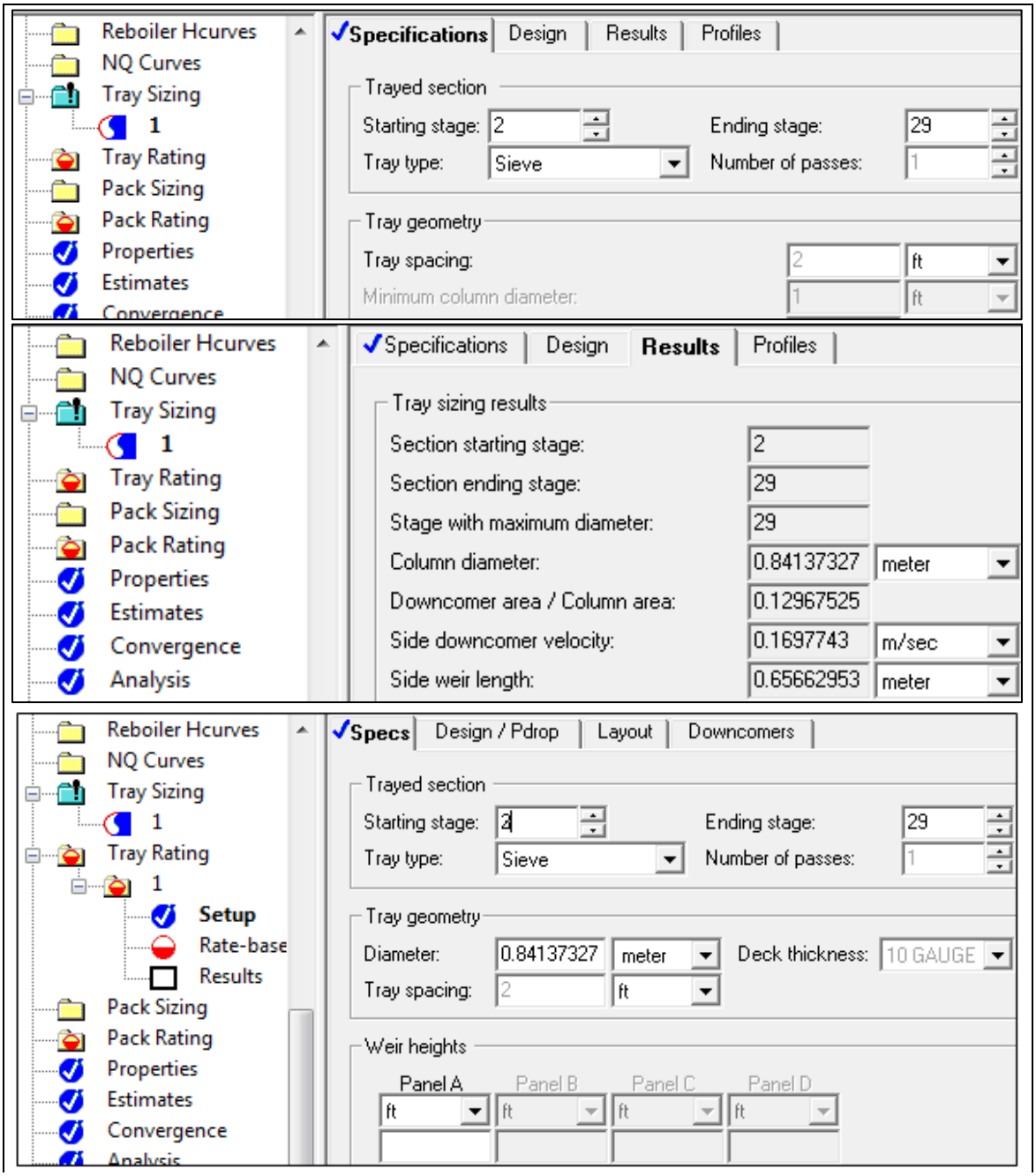
Reboiler Hcurves
NQ Curves
Tray Sizing
1
Tray Rating
Pack Sizing
Pack Rating
Properties
Estimates
Convergence
Specifications
Design
Results
Profiles
Trayed section
Starting stage: 2
Ending stage: 29
Tray type: Sieve
Number of passes: 1
Tray geometry
Tray spacing: 2 ft
Minimum column diameter: 1 ft
Reboiler Hcurves
NQ Curves
Tray Sizing
1
Tray Rating
Pack Sizing
Pack Rating
Properties
Estimates
Convergence
Analysis
Specifications
Design
Results
Profiles
Tray sizing results
Section starting stage: 2
Section ending stage: 29
Stage with maximum diameter: 29
Column diameter: 0.84137327 meter
Downcomer area / Column area: 0.12967525
Side downcomer velocity: 0.1697743 m/sec
Side weir length: 0.65662953 meter
Reboiler Hcurves
NQ Curves
Tray Sizing
1
Tray Rating
1
Setup
Rate-base
Results
Pack Sizing
Pack Rating
Properties
Estimates
Convergence
Specs
Design / Pdrop
Layout
Downcomers
Trayed section
Starting stage: 2
Ending stage: 29
Tray type: Sieve
Number of passes: 1
Tray geometry
Diameter: 0.84137327 meter
Deck thickness: 10 GAUGE
Tray spacing: 2 ft
Weir heights
Panel A
Panel B
Panel C
Panel D
ft
ft
ft
ft

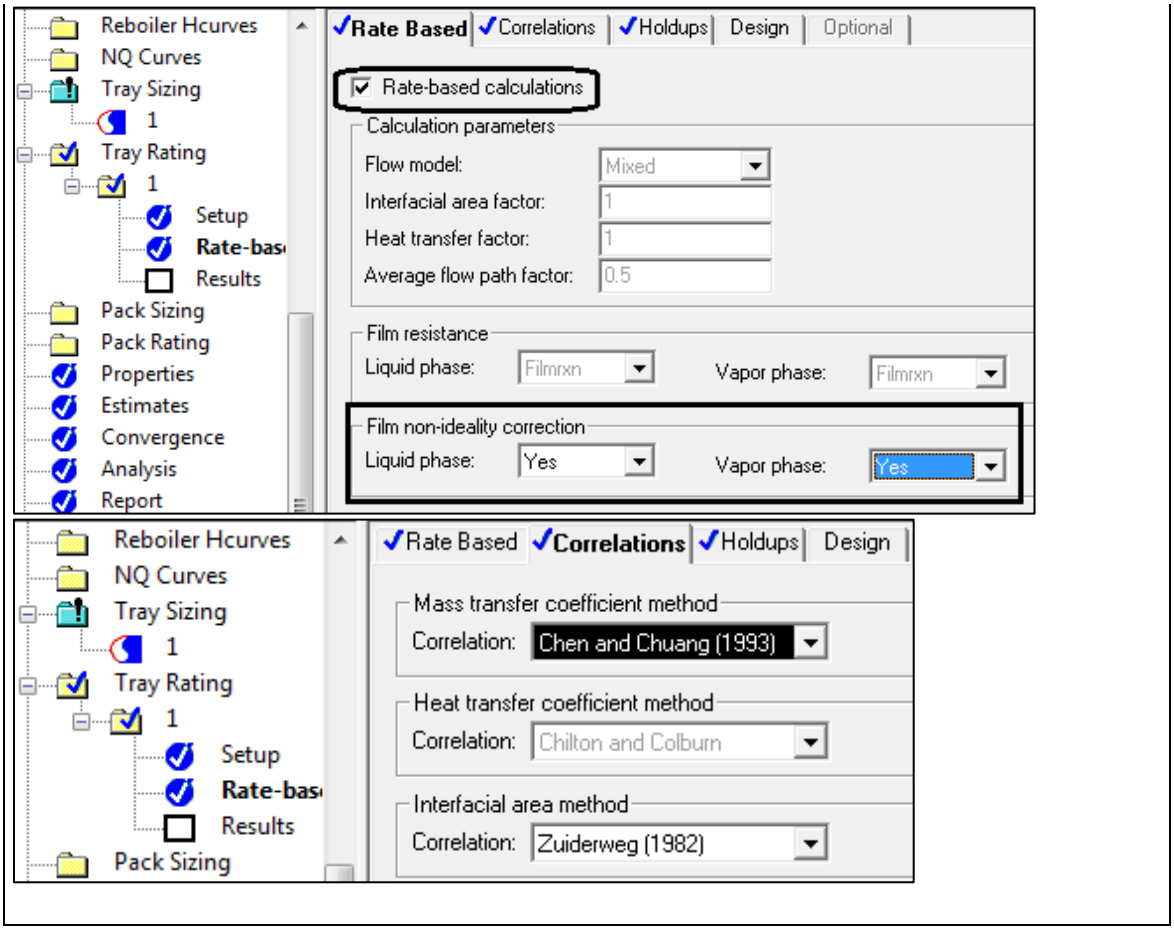

Fig. 3-3 presents the comparison of the temperature profiles, ester mass profiles, water mass profiles, conversion profiles, and exergy loss profiles for the column RD101 for all designs. With the pressure, molar reflux ratio and side heater modifications, the equilibrium design - 2 yield higher conversion than equilibrium design 1 as shown in Table 3-2. Based on the same operating conditions, the rate-based design - 1 yield lower conversion compared to the equilibrium design 2. Therefore, the number of stages and pressure are increase to improve conversion in rate-based design - 2. Fig. 3-4 shows the ternary diagram of the mixture lauric acid-methanol-water. Phase splitting does not occur under the designed process conditions.

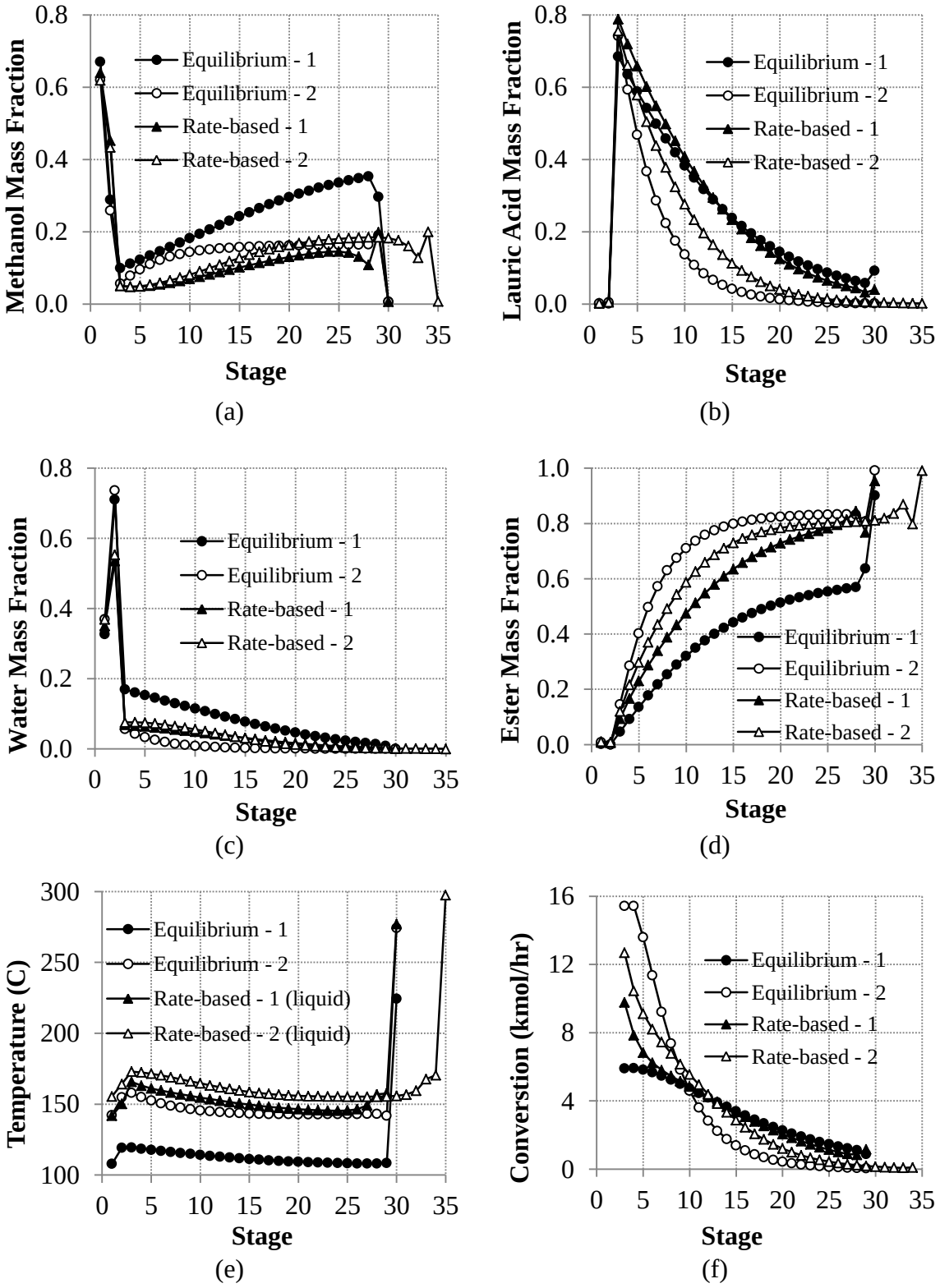

Fig. 3-3. Column RD101: (a) methanol composition profiles; (b) lauric acid composition profiles; (c) water composition profiles; (d) ester composition profiles; (e) temperature profiles; (f) conversion profiles.

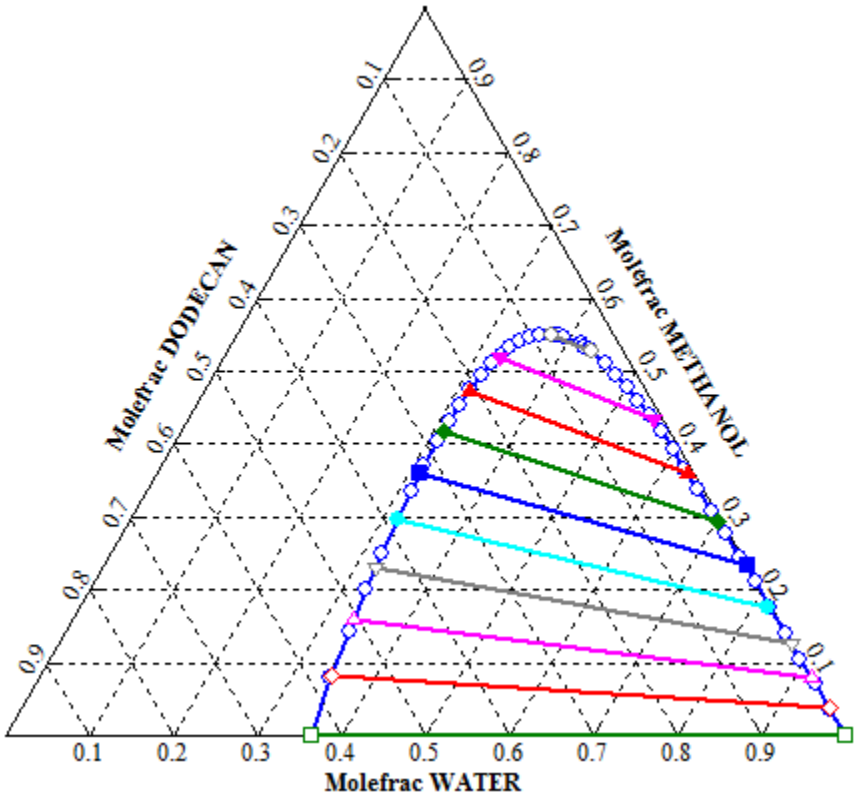

Fig. 3-4. Ternary diagram for the mixture lauric acid-methanol-water at 9.5 atm.

3.4.1. Sensitivity Analysis Results

Fig. 3-5 shows the effects of the reflux ratio on the ester mass fraction in the bottom product stream and water mass fraction at stage 3. A decrease in molar reflux ratio decreases the water concentration considerably but will also decrease the ester purity slightly. Fig. 3-5a shows that a logical operating range of the molar reflux ratio for the column is approximately between 0.7 and 1.1. The ester mass fraction in the bottom stream decreased by 1% but the water mass fraction decreased by about 4% as the molar reflux ratio changed from 1.1 to 0.7. The results of sensitivity analysis, S-1, is shown in Table C-3.

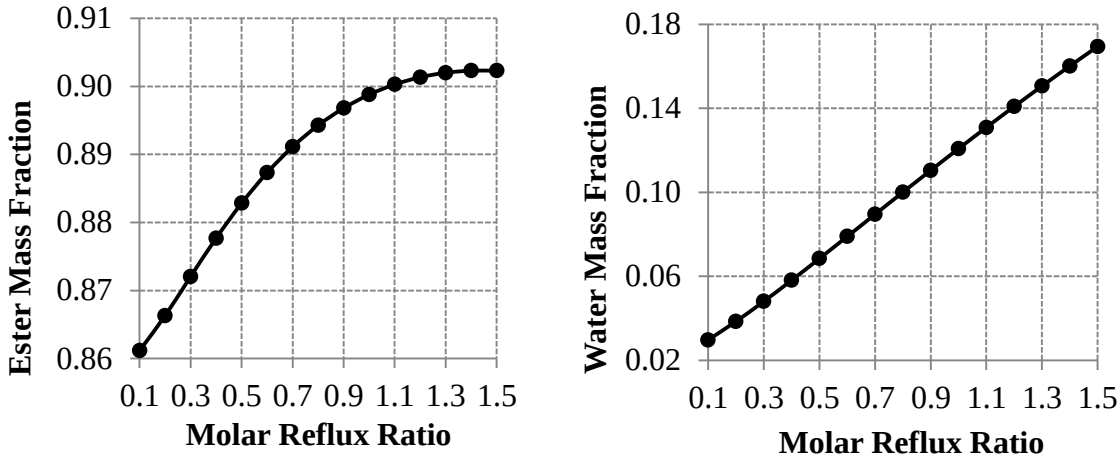

(a) (b)

Fig. 3-5. Sensitivity analysis of molar reflux ratio on; (a) ester mass fraction in the bottom product stream; (b) water mass fraction on stage 3.

As the side heater location gets closer to condenser, the water mass fraction of the stage decreases as indicated in Fig. 3-6. The optimal location for the side heater is at stage 3. Correct placement of side heater removes water effectively, around 2 percent.

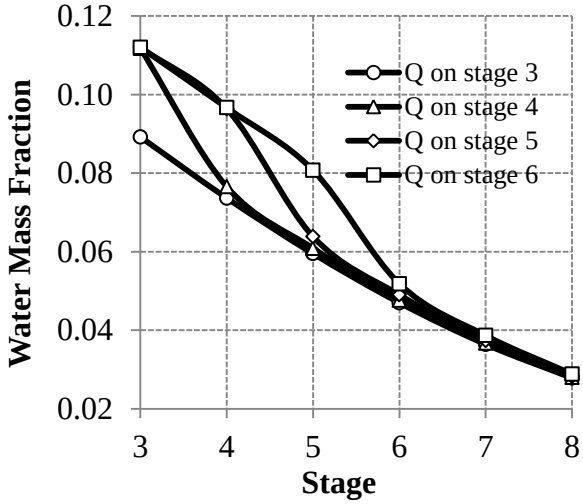

Fig. 3-6. Sensitivity analysis of side heater location on the water mass fraction with a heater duty of 500 kW.

Preliminary analysis indicates that further reduction of water concentration is possible by increasing the side heater duty. Side heater removes water more effectively compared to the reduction of reflux ratio. As shown in Fig. 3-7, increasing the side heater duty from 300 kW to 1200 kW results in lower mass fraction of ester in the product stream by approximately 0.1%, but, the water content on stage 3 decreases more than 4%. Table 3-4 shows the input summary of side heater duty sensitivity analysis. Sensitivity analysis of molar reflux ratio (S-4) and reboiler duty (S-5) of rate-based design 2 can be found in Table C-3, which yields similar trend to the equilibrium design 2.

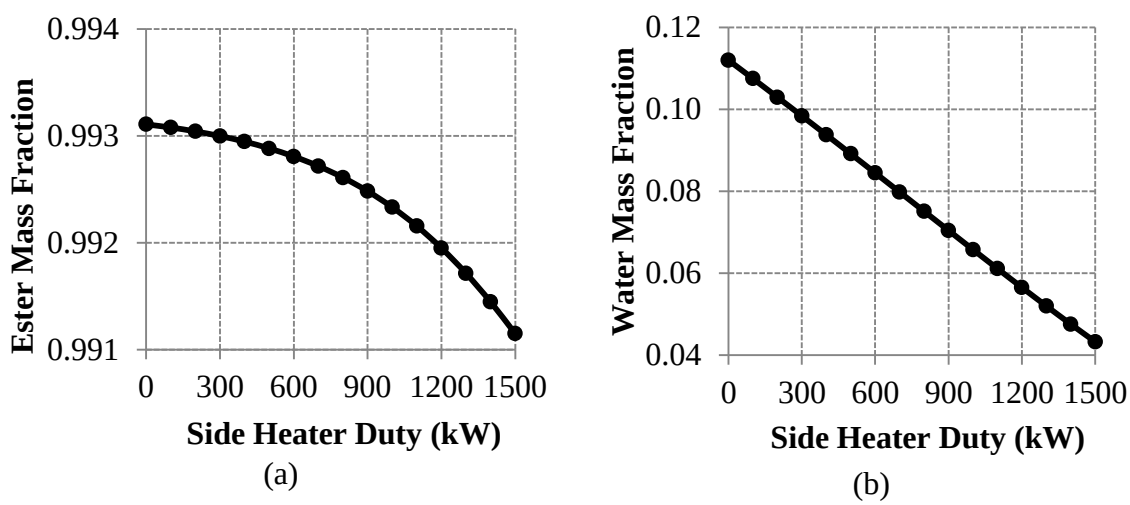

Fig. 3-7. Sensitivity analysis of side heater duty on; (a) ester mass fraction in the bottom production stream; (b) water mass fraction on stage 3.

Table 3-4. Sensitivity analysis input summary of side heater duty.

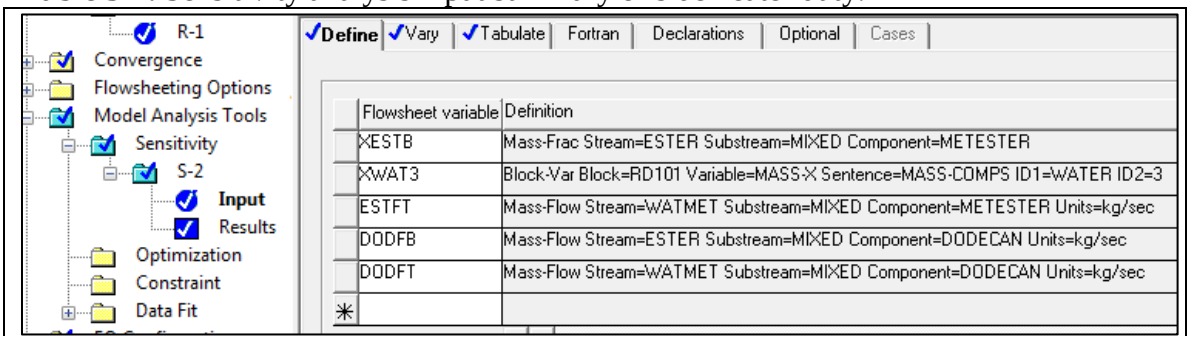

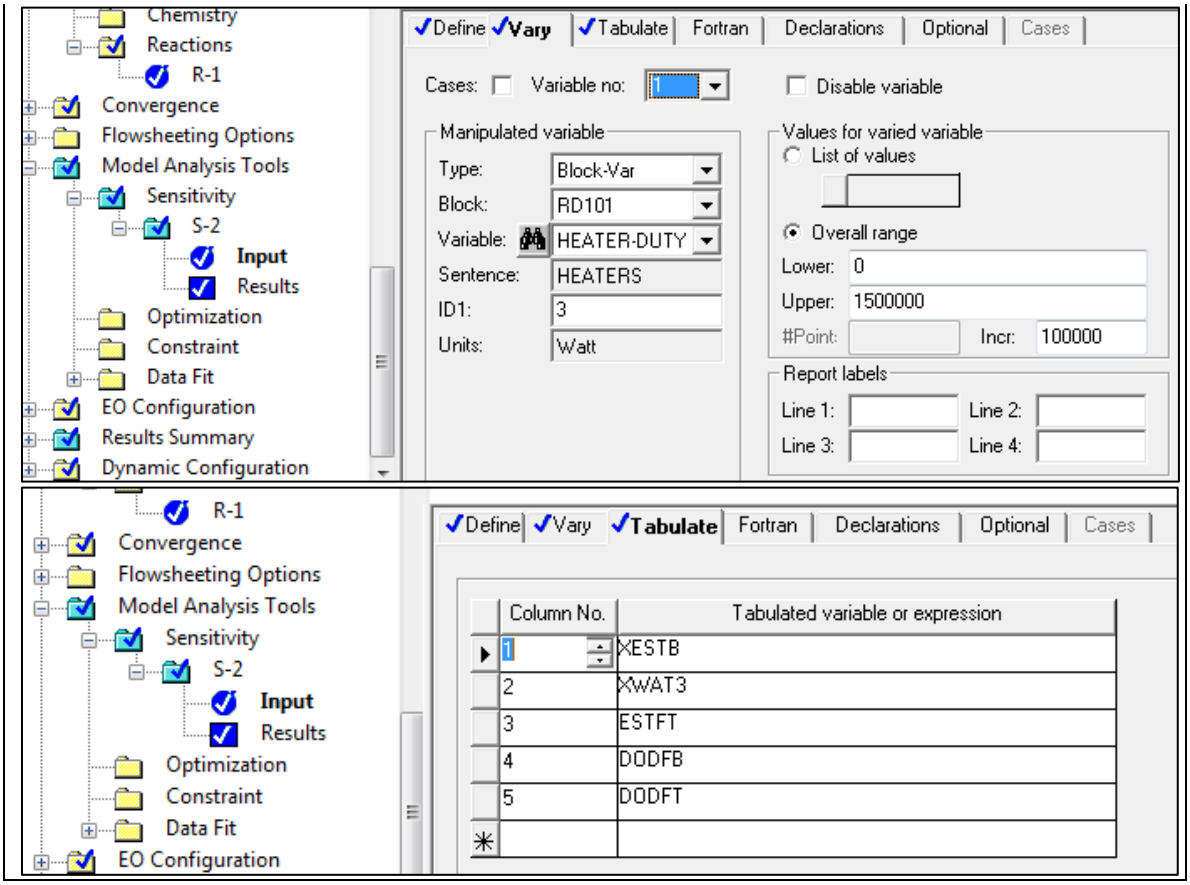

3.5. Conclusions

Process simulation of the nonequilibrium design requires more computation effort due to the increased number of iterative calculations. Equilibrium design requires lower operating pressure and number of stages to achieve the required conversion. Reflux ratio sensitivity analysis has indicated that reduction in reflux ratio decreases the ester flow slightly in the product stream. However, the water concentration in the reaction zone reduces effectively. Correct placement of the side reboiler with the right heat duty has not only removed water effectively but also increased the rate of conversion due to the higher temperature. In summary, the reflux ratio modification and side heater addition has

shown to effectively improve the reaction rate by increase the reaction temperature and continuously removing the by-product, water.

Nomenclature

A_b	Total active bubbling area on the tray, m^2
a^I	Interfacial area for mass transfer, m^2
C_p	Specific molar heat capacity, J/kmol K
D	Diffusivity, m^2/s
$\overline{D}$	Average diffusivity, m^2/s
F	Feed molar flow rate, kmol/s
FT	Flow parameter
H	Enthalpy, J/kmol
$\overline{H}$	Partial enthalpy, J/kmol
h	Heat transfer coefficient, J/m^2 K s
k	Mass transfer coefficient, m/s
$\bar{k}$	Average mass transfer coefficient, m/s
L	Liquid molar flow rate, kmol/s
l_w	Average weir length (per liquid pass), m
N	Mass transfer rate, kmol/s
Q	Heat input to a stage, J/s
q	Heat transfer rate, J/s
R	Inverse of the mass transfer coefficient matrix, s/kmol
r	Reaction rate, kmol/s
T	Temperature, K

u_s	Superficial velocity, m/s
V	Vapor molar flow rate, kmol/s
x	Bulk liquid mole fraction
y	Bulk vapor mole fraction

Greek symbols

$\Delta\phi^E$	Driving force caused by electric potential
Γ	Matrix of thermodynamic factors
$\delta_{i,k}$	Kronecker delta: 1 if i=k, 0 otherwise
ρ_t	Mass density, kg/m^3
$\bar{\rho}$	Molar density, kmol/m^3
φ	Fugacity coefficient
ϕ	Fractional hole area per unit bubbling area
λ	Thermal conductivity, W/m K
σ	Liquid surface tension, N/m

Superscripts

F	Feed
f	Film
I	Interface
L	Liquid
V	Vapor

Subscripts

i	Component
j	Stage

k	Component
L	Liquid
m	Component
n	Last component
t	Total
V	Vapor

References

1. Omota, F., Dimian, A.C., Bliek, A. 2003. Fatty acid esterification by reactive distillation: Part 1: equilibrium-based design. Chem. Eng. Sci. 98, 3159-3174.

2. Omota, F., Dimian, A.C., Bliek, A. 2003. Fatty acid esterification by reactive distillation: Part 2 –kinetics-based design for sulphated zirconia catalysts. Chem. Eng. Sci. 58, 3175-3185.

3. Dimian, A.C., Bildea, C.S., Omota, F., et al. 2009. Innovative process for fatty acid esters by dual reactive distillation. Comp. Chem. Eng. 33, 743-750.

4. Kiss, A.A., Dimian, A.C., Rothenberg, G. 2008. Biodiesel by catalytic reactive distillation powered by metal oxides. Energy and Fuels 22, 598-604.

5. William, L.L., Cheng-Ching, Y. 2008. Reactive Distillation Design and Control, Wiley; New York.

6. Taylor, R., Krishna, R., Kooijman, H. 2003. Real-world modeling of distillation. Chem. Eng. Prog. 99, 28-39.

7. Agarwal, S., Taylor, R. 1994. Distillation column design calculations using a nonequilibrium model. Ind. Eng. Chem. Res. 33, 2631-2636.

8. Higler, A., Krishna, R., Taylor, R. 1999. Nonequilibrium cell model for multicomponent (reactive) separation processes. AIChE J. 45, 2357-2370.

9. Peng, J., Lextrait, S., Edgar, T.F., et al. 2002. A comparison of steady-state equilibrium and rate-based models for packed reactive distillation columns. Ind. Eng. Chem. Res. 41, 2735-2744.

10. Zhang, Y., Dubé, M.A., McLean, D.D., et al. 2003. Biodiesel production from waste cooking oil: 1. Process design and technological assessment. Bioresource Technol. 89, 1-16.

11. Nguyen, N., Demirel, Y. 2010. Retrofit of distillation columns in biodiesel production plants. Energy 35, 1625-2632.

12. Kiss, A.A., Dimian, A.C., Rothenberg, G. 2005. Solid acid catalysts for biodiesel production towards sustainable energy. Adv. Synth. Catal. 348, 75-81.

13. Lopez, D.E., Goodwin Jr., J.G., Bruce, D.A., et al. 2005. Transesterification of triacetin with methanol on solid acid and base catalysts. Applied Catalysis A: 295, 97-105.

14. Zabeti, M., Daud, W.M.A.W., Aroua, M.K. 2009. Activity of solid catalysts for biodiesel production: A review. Fuel Processing Technol. 90, 770-777.

15. Nguyen, N., Demirel, Y., 2011. Reactive distillation column for esterification of lauric acid with methanol: Equilibrium vs. nonequilibrium approaches. AIChE Annual. Meeting. Conf. Proc. Nov 7-12, Salt Lake City, Utah.

16. Aspen Engineering Suite, 2004. www.aspentech.com.

17. Kenig, E.Y., Górak, A., Pyhälahti, A., et al. 2004. Advanced rate-based simulation tool for reactive distillation. AIChE Journal 50, 322-342.

18. Chen, G.X., Chuang, K.T. 1993. Prediction of point efficiencies for sieve trays in distillation. Ind. Eng. Chem. Res. 32, 701-708.

19. Taylor, R., Krishna, R. 1993. Multicomponent mass transfer, Wiley; New York.

20. Zuiderweg, F.J. 1982. Sieve trays – A view of the state of the art. Chem. Eng. Sci. 37, 1441-1464.

CHAPTER 4

Using Thermally Coupled Reactive Distillation Columns in Biodiesel Production

4.1. Introduction

Separation by distillation is an energy intensive process and consumes approximately 3% of the energy in the world [1]. Thermodynamic analysis (TA), process intensification, and process heat integration are some of the ways for retrofitting [2,3]. TA through column grand composite curves (CGCC) generated by the thermal analysis of Column Targeting Tools of Aspen Plus simulator identifies scopes for modification in feed location, reflux ratio, feed conditioning, and side condensing and reboiling to reduce wasted energy due to heat and mass transfer, mixing, and pressure drop [4-8]. In a reactive distillation column, the scope of thermal analysis is limited, such as the feed locations are constrained to maximize the conversion. Effects of molar reflux ratio and side reboiling on conversion of base case reactive distillation (BCRD) column were previously investigated in Chapter 3 [7].

Reactive distillation (RD) consists of separation and reaction zones, which may minimize operational and equipment costs by decreasing waste energy and overcoming thermodynamic and chemical equilibrium limitations [9-13]. However, usage of RD requires reaction temperature to occur within separation temperature range, suitable relative volatilities of the components and reasonably fast reaction rate preferably in

liquid-phase due to low residence time in vapor phase [14]. Further reduction of energy and equipment cost is possible by thermally coupled distillation sequences [15-22] as they allow interconnecting vapor and liquid flows between the two columns to eliminate the reboiler or condenser or both [23]. Thermally coupled side-rectifier, side-stripper, and petlyuk columns are the three well-known configurations. Petlyuk configuration is restricted due to bidirectional vapor and liquid flows [24,25]. The side-rectifier and side-stripper configurations tend to be the most efficient ones [19].

Ethyl acetate production with thermally coupled reactive distillation using ethanol and acetic acid was previously investigated by Barroso-Muñoz et al. [26]. Their petlyuk column needs larger number of stages and hence result in higher capital investment [5-7]. Also the overall conversion is low, which may lead to higher cost for the separation. Recently, Gomez-Castro et al. [22] proposed a biodiesel production process that employed supercritical methanol method using reactive petlyuk column. However, excessive operating pressure requirement may result in higher equipment and operating costs.

This Chapter considers thermally coupled reactive distillation (TCRD) configuration to produce ester using lauric acid and methanol with a solid acid catalyst of sulfated zirconia (SO_4^{-2}/ZrO_2) [27-29]. In this proposed biodiesel plant, thermally coupled side-stripper reactive distillation (TCSRD) configuration has been considered, since using the reactive distillation column as a side-rectifier may cause lower reaction rate because the reaction zone temperature must be within the separation temperature of methanol and water. Also, using the methanol recovery column as a rectifier may disrupt the reaction zone with the side feed and withdraw [10-12,15-19].

4.2. Methods and Approaches

4.2.1. Simulation

Aspen Plus simulation package is used to design, develop, and simulate a base case biodiesel production plant and a thermally coupled biodiesel production plant. The most efficient plant is determined by using thermodynamic analysis through column grand composite curve (CGCC) and exergy loss profiles. Hydraulic is used to determine the flow properties of the two columns.

4.2.2. Thermally Coupled Distillation Column Configurations

Thermally integrated distillation column configurations eliminate either the reboiler or condenser or both by allows interconnecting vapor and liquid streams flow from one column to another. The three well-known configurations are the side rectifier, side stripper, and petlyuk column; side-stripper column operates without a condenser, side-stripper column operates without a reboiler, and petlyuk column operates without both condenser and reboiler as shown in Fig. 4-1. Petlyuk column is the most efficient configuration but operating condition is very narrow due to complex bidirectional vapor and liquid flows [24].

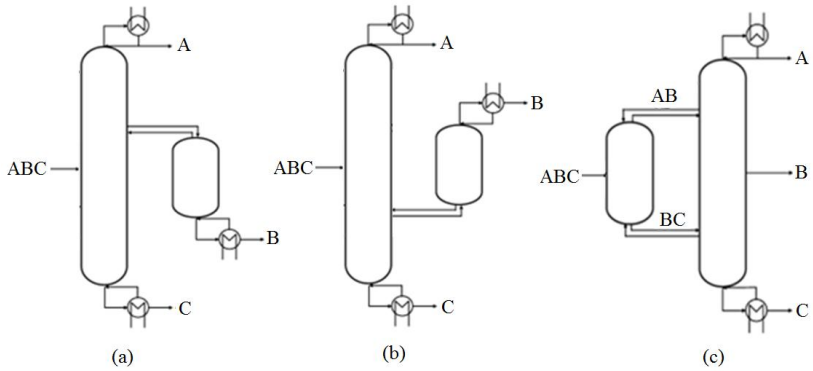

Fig. 4-1. Thermally coupled distillation column configurations: (a) side-stripper; (b) side-rectifier; (c) petlyuk [19].

4.2.2.1. Configuration Selection

Fig. 4-2 shows the three thermally coupled configurations for the esterification of lauric acid with methanol reaction. Using thermally coupled side-rectifier configuration required the side feed and side withdraw streams to occur at the reaction zone, which may cause disruption in the reaction zone as shown in Fig. 4-2a. Ester may be the only available component if the side feed and withdraw occurs at the bottom separation zone. Petlyuk configuration is difficult to operate due to bidirectional vapor and liquid flows as presented in Fig. 4-2c. Besides, high purify ester is being sent from one column to another which may lead to unnecessary energy consumption.

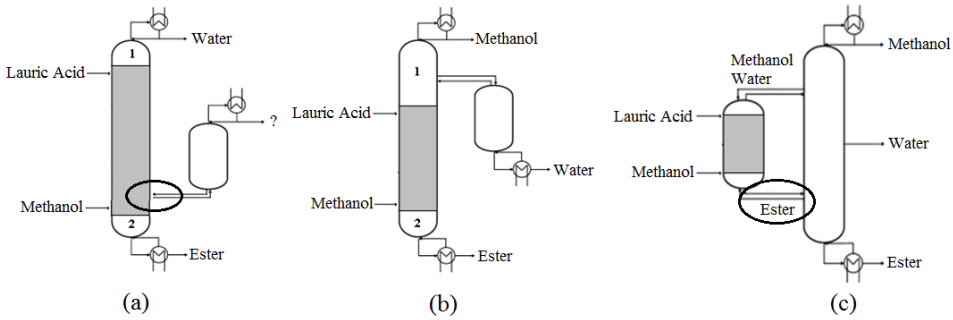

? = composition depends on the operating conditions of the columns; 1 = rectifying section, 2 = stripping section; shaded = reaction section.

Fig. 4-2. Thermally coupled reactive configurations for esterification of lauric acid with methanol: (a) side-stripper; (b) side-rectifier; (c) petlyuk.

4.2.3. Thermodynamic Efficiency

For distillation columns, the total separation work (minimum exergy flow rate) required for a separation is directly proportional to the differences between the exergies of products and feed streams

$$\dot{E}_{x,\min} = \sum_{\text{out}} \dot{n} e_x - \sum_{\text{in}} \dot{n} e_x \tag{4-1}$$

Thermodynamic efficiency (η) is the ratio between the total useful work output and the total exergy input. When $\dot{E}_{x,\min}$ is greater than zero, the η is calculated by Refs. [4,5]

$$\eta = \frac{\dot{E}_{x,\min}}{\dot{E}_{x,\min} + \dot{E}_{x,\text{loss}}} \tag{4-2}$$

In Eq. (3-2), the numerator indicates the minimum energy required, and denominator represents the total exergy input. If the value of $\dot{E}_{x,\min}$ is negative, the η is given by

$$\eta = \frac{\dot{E}_{x,\min}}{\dot{E}_{x,\min} - \dot{E}_{x,\text{loss}}} \tag{4-3}$$

Exergy loss is always greater than zero in every irreversible processes, hence, η must lie between 0 and 1. A conventional distillation column receives heat in the reboiler, performs the separation work, and releases the rest of the amount in the condenser. Thus, it resembles a thermal engine and the efficiency is typically much less than 1.

4.2.4. Hydraulic Analysis Profiles

Hydraulic analysis profiles generated by Aspen Plus can be used to compare the actual flow (AF) profiles with the thermodynamic ideal minimum flow (TIMF) and the hydraulic maximum flow (HMF) profiles in a distillation column [7]. For tray and packed columns, vapor flooding limit calculations are controlled by jet flooding. For tray columns, liquid flooding limits are controlled by parameters such as downcomer backup. Column bottlenecks can be identified and eliminated by using hydraulic analysis. To avoid flooding and drying, the actual liquid and vapor flow rates must lie between the maximum and minimum limits liquid and vapor flow rates.

4.3. Biodiesel Plant

A biodiesel production plant using reactive distillation sequence requires at least two columns for biodiesel separation and methanol recovery as seen in Fig. 4-3a [13]. Fig. 4-3b proposes a thermally coupled reactive distillation column sequence utilizing methanol and lauric acid (oil) to produce product methyl dodecanoate (biodiesel) [30]. Table D-1 shows the input summary of the thermally coupled design. Tables 4-1 and 4-2 summarize the stream properties for both sequences. Stream LAURIC is preheated by stream ESTERB in heat exchanger HX101 to 100°C and enters to the top of the reaction zone at stage 3 of RD101. Stream METH combined with stream S3B in mixer M101 is preheated to 110°C in heat exchanger HX102 before it is fed to the bottom of the reaction zone at stage 29 of RD101. The feeds enter at the both ends of the reaction zone to maximize conversion [7,10-14]. Although the conversion nearly reaches completion in 23 reactive stages, 27 reactive stages are set for ensuring flexibility in the operation. Both

feed streams are preheated to minimize the loss of exergy caused by the temperature gradient. The plant produces around 99.2 wt% of 21,527 kg/h of methyl dodecanoate and dilute concentration of methanol in water as summarized in Tables 4-1 and 4-2. The inlet streams conditions are identical while there is a slight difference of the product concentrations in the outlet streams between the two sequences of distillation columns.

The distillate, stream WATMET, of column RD101 is fed to stage 9 and 10 of column T101 of the BCRD and TCSRD sequences, respectively. Column T101 recovers methanol from water and recycles. The column operates with 12 stages, with a kettle reboiler and a total condenser. The activity coefficient model of NRTL is used for predicting the equilibrium and liquid properties in column T101. The top product, stream S3A, containing mostly methanol is pressurized before it is recycled. The bottom product, stream WATA, is treated as a waste. Stream ESTERA and S3A are tear streams for both sequences, while stream S4A and WATMET are tear streams only for the TCSRD sequence.

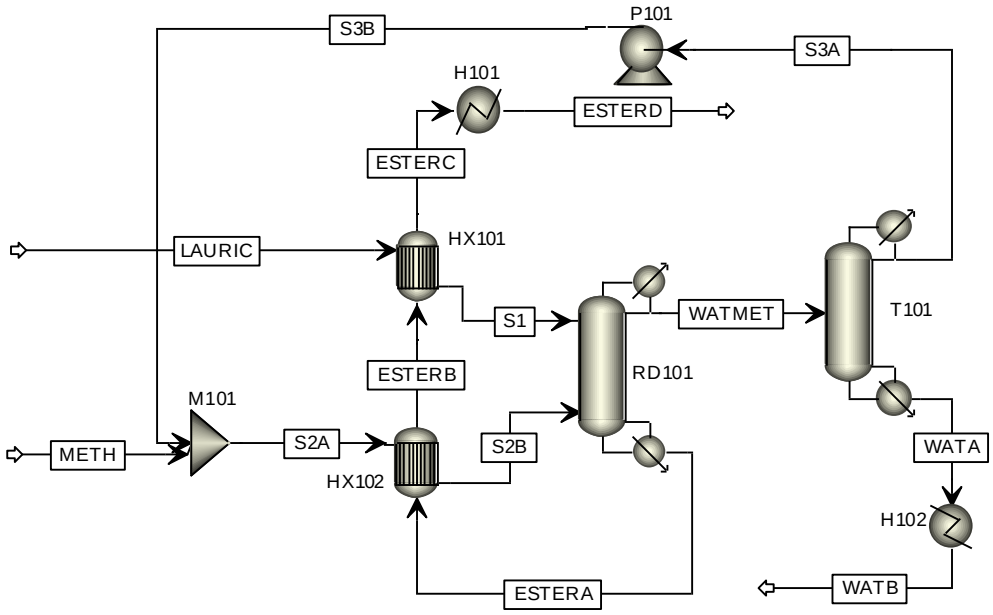

(a)

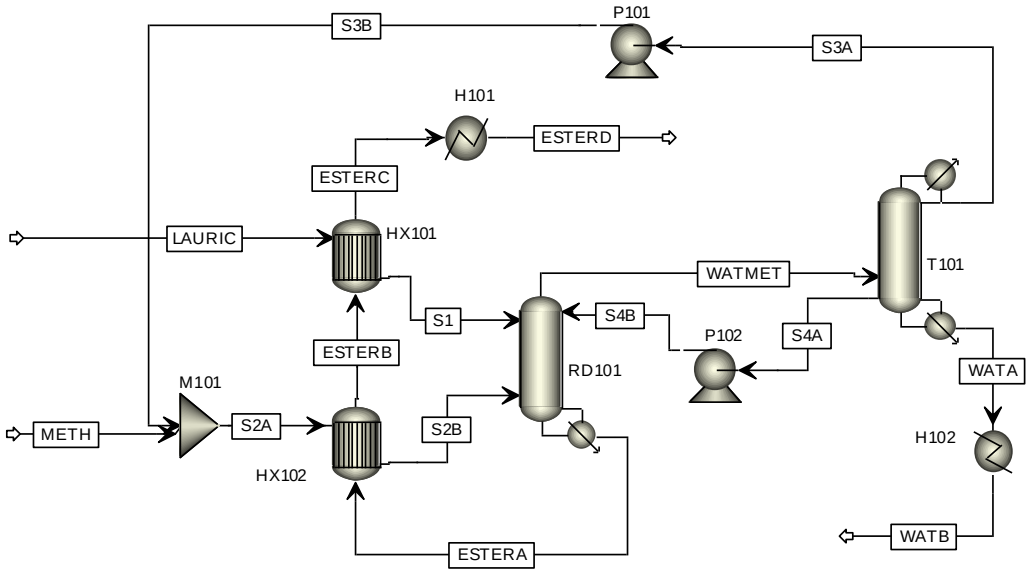

(b)

Fig. 4-3. Process flow diagrams for biodiesel plant: (a) base case design; (b) thermally coupled design [40].

Table 4-1. Streams properties of the base case design (Fig. 4-3a).

	LAURIC	METH	S3B	S2A	S1	S2B	ESTERA	ESTERB	ESTERC	WATMET	S3A	WATA
Mass Flow (kg/hr)	20032.14	3364.43	3029.98	6394.41	20032.14	6394.41	21560.97	21560.97	21560.97	4865.57	3029.98	1835.59
Temperature (^{o}C)	25.00	25.00	65.07	44.54	100.00	110.00	311.29	288.12	234.68	124.12	64.36	97.59
Pressure (bar)	5.5	6.0	6.0	6.0	5.5	6.0	6.0	6.0	6.0	5.5	1.0	1.0
Vapor Fraction	0	0	0	0	0	0	0	0	0	0	0	0
Enthalpy (kcal/mol)	-176.42	-56.98	-56.07	-56.55	-168.25	-54.69	-124.13	-127.72	-135.57	-60.57	-56.09	-66.83
Entropy (cal/mol-K)	-324.48	-57.53	-54.14	-55.85	-300.06	-50.88	-241.91	-248.01	-262.48	-40.80	-54.18	-35.14
Mass Flow (kg/hr)												
WATER	0.00E+00	0.00E+00	1.80E+01	1.80E+01	0.00E+00	1.80E+01	1.33E+00	1.33E+00	1.33E+00	1.82E+03	1.80E+01	1.80E+03
METHANOL	0.00E+00	3.36E+03	3.01E+03	6.38E+03	0.00E+00	6.38E+03	1.26E+02	1.26E+02	1.26E+02	3.05E+03	3.01E+03	3.47E+01
LAURIC ACID	2.00E+04	0.00E+00	4.07E-36	4.07E-36	2.00E+04	4.07E-36	2.64E+00	2.64E+00	2.64E+00	8.98E-02	4.07E-36	8.98E-02
METESTER	0.00E+00	0.00E+00	1.48E-17	1.48E-17	0.00E+00	1.48E-17	2.14E+04	2.14E+04	2.14E+04	8.48E-01	1.48E-17	8.48E-01
Mass Fraction												
WATER	0.0000	0.0000	0.0059	0.0028	0.0000	0.0028	0.0001	0.0001	0.0001	0.3736	0.0059	0.9806
METHANOL	0.0000	1.0000	0.9941	0.9972	0.0000	0.9972	0.0058	0.0058	0.0058	0.6262	0.9941	0.0189
LAURIC ACID	1.0000	0.0000	0.0000	0.0000	1.0000	0.0000	0.0001	0.0001	0.0001	0.0000	0.0000	0.0000
METESTER	0.0000	0.0000	0.0000	0.0000	0.0000	0.0000	0.9940	0.9940	0.9940	0.0002	0.0000	0.0005

Table 4-2. Stream properties of the thermally coupled design (Fig. 4-3b).

	LAURIC	METH	S3B	S2A	S1	S2B	ESTERA	ESTERB	ESTERC	WATMET	S4B	S4A	S3A	WATA
Mass Flow (kg/hr)	20032.14	3364.43	3029.98	6394.41	20032.14	6394.41	21526.71	21526.71	21526.71	5036.00	136.19	136.19	3029.98	1869.83
Temperature (^{0}C)	25.00	25.00	65.52	44.76	100.00	110.00	274.96	250.36	194.21	155.50	97.73	91.46	64.36	96.34
Pressure (bar)	9.0	9.5	9.5	9.5	9.0	9.5	9.5	9.5	9.5	9.0	9.0	1.0	1.0	1.0
Vapor Fraction	0	0	0	0	0	0	0	0	0	1	0	0	0	0
Enthalpy (kcal/mol)	-176.42	-56.98	-56.06	-56.55	-168.25	-54.69	-129.49	-133.06	-140.92	-51.97	-66.47	-66.63	-56.09	-67.01
Entropy (cal/mol-K)	-324.48	-57.53	-54.10	-55.84	-300.06	-50.88	-251.07	-257.62	-273.34	-19.83	-36.55	-36.95	-54.18	-35.67
Mass Flow (kg/hr)														
WATER	0.00E+00	0.00E+00	1.80E+01	1.80E+01	0.00E+00	1.80E+01	1.79E-01	1.79E-01	1.79E-01	1.93E+03	1.18E+02	1.18E+02	1.80E+01	1.80E+03
METHANOL	0.00E+00	3.36E+03	3.01E+03	6.38E+03	0.00E+00	6.38E+03	1.34E+02	1.34E+02	1.34E+02	3.06E+03	1.40E+01	1.40E+01	3.01E+03	3.41E+01
LAURIC ACID	2.00E+04	0.00E+00	7.56E-32	7.56E-32	2.00E+04	7.56E-32	3.79E+01	3.79E+01	3.79E+01	9.99E+00	3.49E-01	3.49E-01	7.56E-32	9.64E+00
METESTER	0.00E+00	0.00E+00	6.53E-15	6.53E-15	0.00E+00	6.53E-15	2.14E+04	2.14E+04	2.14E+04	3.30E+01	3.97E+00	3.97E+00	6.53E-15	2.90E+01
Mass Fraction														
WATER	0.0000	0.0000	0.0059	0.0028	0.0000	0.0028	0.0000	0.0000	0.0000	0.3838	0.8655	0.8655	0.0059	0.9611
METHANOL	0.0000	1.0000	0.9941	0.9972	0.0000	0.9972	0.0062	0.0062	0.0062	0.6076	0.1028	0.1028	0.9941	0.0182
LAURIC ACID	1.0000	0.0000	0.0000	0.0000	1.0000	0.0000	0.0018	0.0018	0.0018	0.0020	0.0026	0.0026	0.0000	0.0052
METESTER	0.0000	0.0000	0.0000	0.0000	0.0000	0.0000	0.9920	0.9920	0.9920	0.0066	0.0292	0.0292	0.0000	0.0155

4.4. Results and Discussions

4.4.1. Column RD101

Table 4-3 compares the operating conditions and configurations for reactive distillation column RD101 in base case and thermally coupled sequences. The base case sequence operates with a total condenser, duty of –2168.38 kW, and a molar reflux ratio of 0.1, while the thermally coupled design has no condenser, and has the reboiler duty of 735.98 kW less than the base case sequence. However, higher pressure is required to achieve a comparable conversion due to the interconnecting vapor flow from the top of the column in thermally coupled sequence. Interconnecting side stream S4B, with molar flow rate of 7 kmol/h, cools down top of the column RD101 as seen in Fig. 4-3b.

The temperature, composition, conversion, and exergy loss profiles in column RD101 of both the sequences are shown in Fig. 4-4. The summary of column R101 is presented in Table D-2 for the thermally coupled design. In the thermally coupled column, the reaction zone temperature profile remains almost constant. The composition profiles (Fig. 4-4b) indicate that the base case sequence contains higher water concentration in the reaction zone. Both sequences have comparable conversions as shown in Fig. 4-4c. The exergy loss profiles, shown in Fig. 4-4d, indicate that the exergy losses in the stages 4-28 for both reactive distillation columns overlap [31]. Exergy loss mainly occurs at the feed stages and in the reboilers. For column RD101, the total exergy loss of the thermally coupled design is 23.7% less than the base case sequence. The hydraulic analyses shown in Fig. 4-5a-d indicate that actual vapor and liquid flows overlap with the thermodynamic ideal minimum vapor and liquid flows, respectively, from stages 3-28. The HMF is higher for base case sequence for both actual liquid and

vapor flows. No flooding or dried up stages have occurred. Fig. 4-5e and f shows the stage-enthalpy CGCCs for the base case and thermally coupled sequences produced by the thermal analysis; the ideal and actual profiles in the separation zones are close to each other.

Table 4-3. Comparison of operating conditions and configurations of reactive distillation column RD101 and distillation column T101 of base case and thermally coupled designs [30].

	Base Case Design			Thermally Coupled Design		
Condition & Configurations	RD101	T101	Total	RD101	T101	Total
Number of stages	30	12		30	12	
S1 feed stage	3	__		3	__	
S2B feed stage	29	__		29	__	
S4B feed stage	__	__		1	__	
WATMET feed stage	__	9		__	10	
S1 temperature, ^{o}C	100	__		100	__	
S2B temperature, ^{o}C	110	__		110	__	
Molar reflux ratio	0.1	1.55		__	2.02	
S4B flow rate, kmol/hr	__	__		7	__	
Reaction stages	3-29	__		3-29	__	
Distillate rate, kmol/hr	196	95		203	95	
Column diameter, m	1.04	1.10		0.86	1.25	
Liquid holdup, cm^3	0.043	__		0.043	__	
Condenser duty, kW	-2168.38	-2375.23	-4543.61	0.00	-2809.62	-2809.62
Condenser temperature, ^{o}C	124.12	64.36		155.50	64.36	
Condenser pressure, bar	5.5	1.0		9.0	1.0	
Side condenser stage	__	__		__	6	
Side condenser duty, kW	__	__		__	-600.00	-600.00
Reboiler duty, kW	5634.95	2136.23	7771.18	4898.97	1067.38	5966.35
Boilup rate, kmol/hr	177.80	186.19		217.53	89.63	
Bottoms rate, kmol/hr	104	101		104	101	
Reboiler temperature, ^{o}C	311.29	97.59		274.96	96.34	
Reboiler pressure, bar	6.0	1.0		9.5	1.0	
Total Conversion, mol%	99.99	__		99.76	__	
Exergy loss, kW	1189.04	108.36	1297.40	907.31	108.74	1016.05

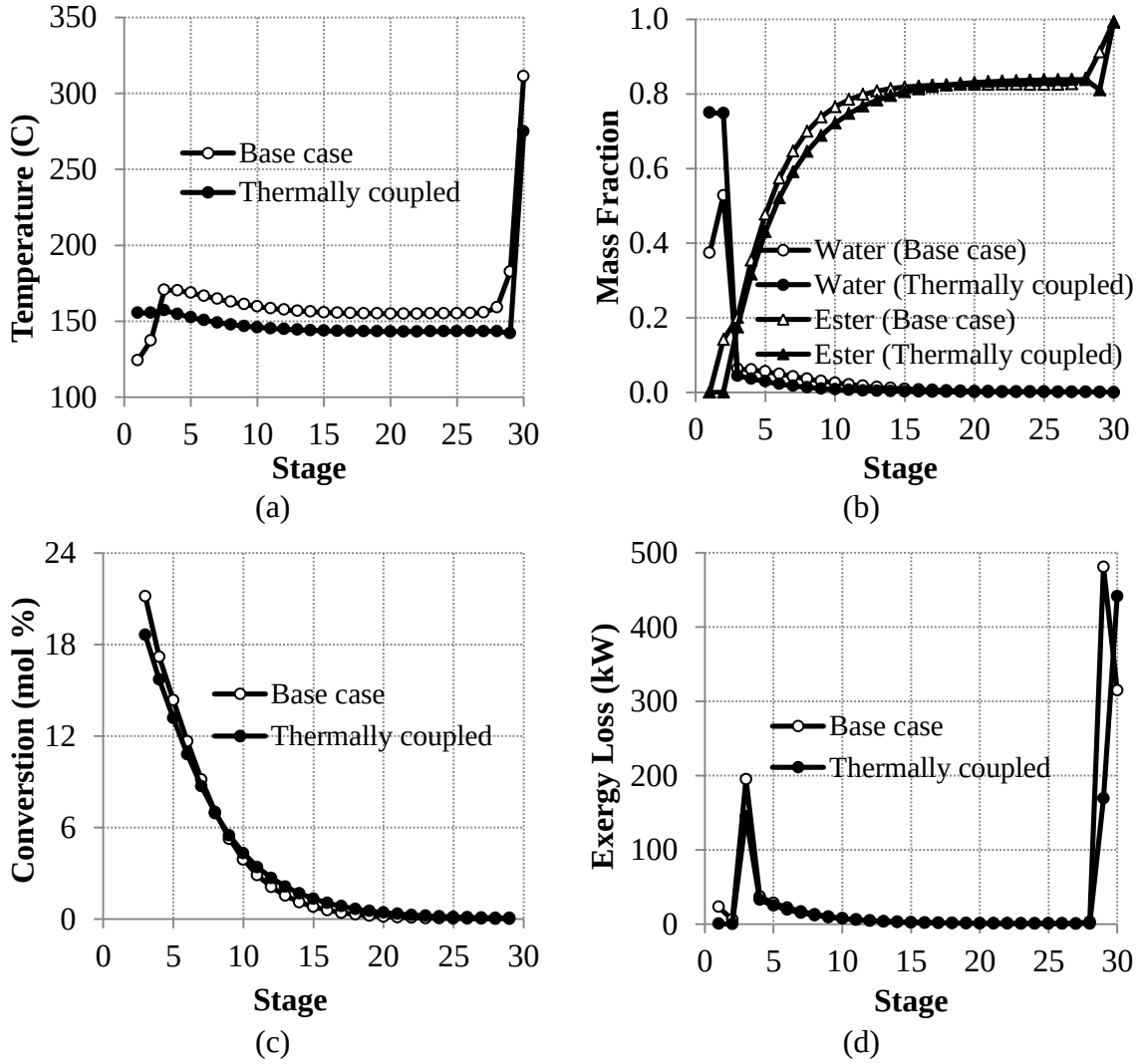

Fig. 4-4. Comparison of operating conditions for reactive distillation column RD101: (a) temperature profiles; (b) composition profiles; (c) reaction profiles; (d) exergy loss profiles.

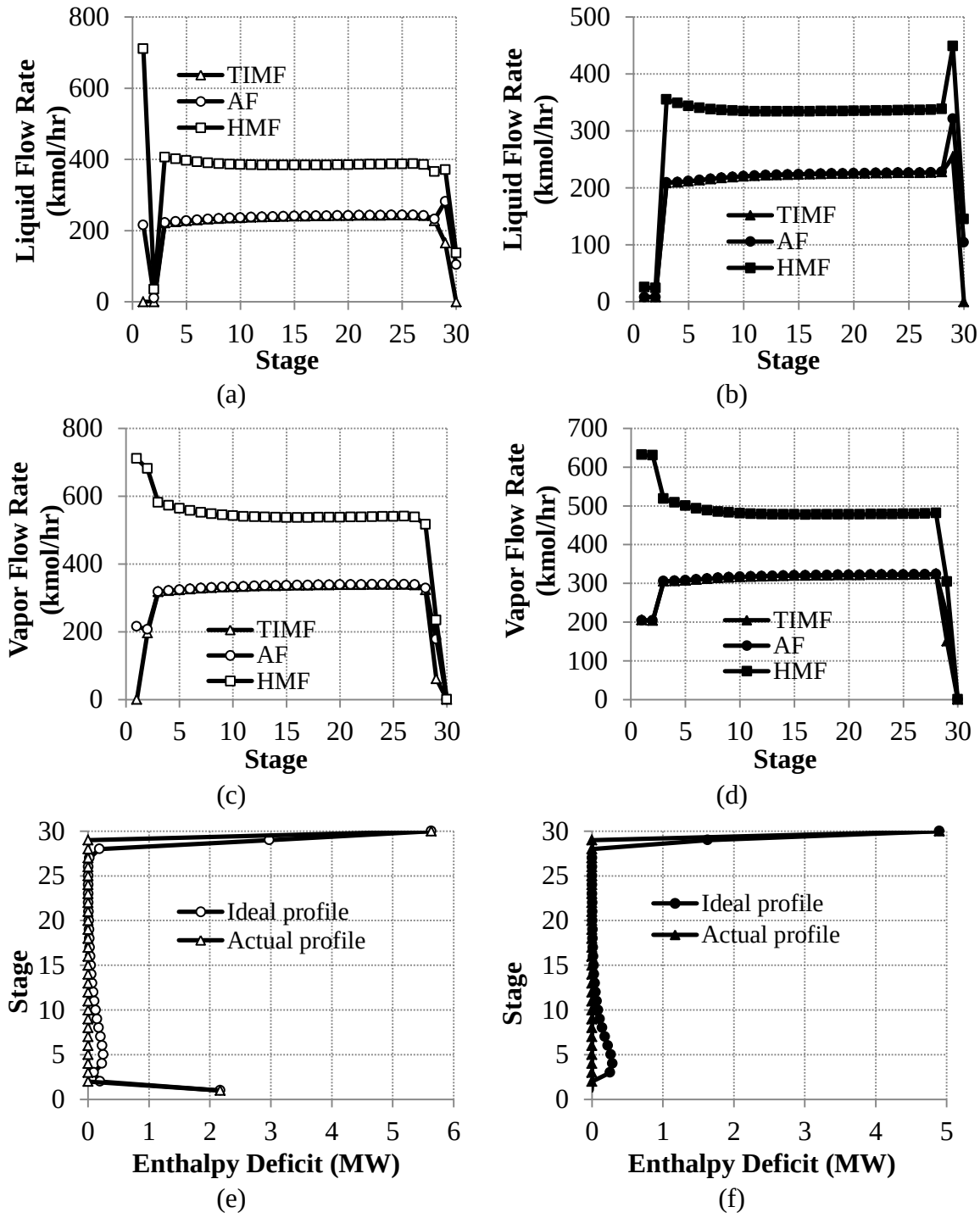

*TIMF-Thermodynamic ideal minimum flow; AF-Actual flow; HMF-Hydraulic maximum flow

Fig. 4-5. Hydraulic analysis and enthalpy deficit profiles for column RD101: (a) stage-liquid flow rate profiles of base case design; (b) stage-liquid rate profiles of thermally coupled design; (c) stage-vapor flow rate profiles of base case design; (d) stage-vapor flow rate profiles of the thermally coupled design; (e) stage-enthalpy deficit curves of base case design; (f) stage-enthalpy deficit curves of the thermally coupled design.

4.4.2. Column T101

The base case and thermally coupled distillation columns T101 operate with molar reflux ratios of 1.55 and 2.02, respectively, as shown in Table 4-3. Design specification is used to set the flow rate of water to 1 kmol/h in the distillate by varying the molar reflux ratio. Table 4-4 provides input summary of design specification.

Table 4-4. Column T101 design specification input summary.

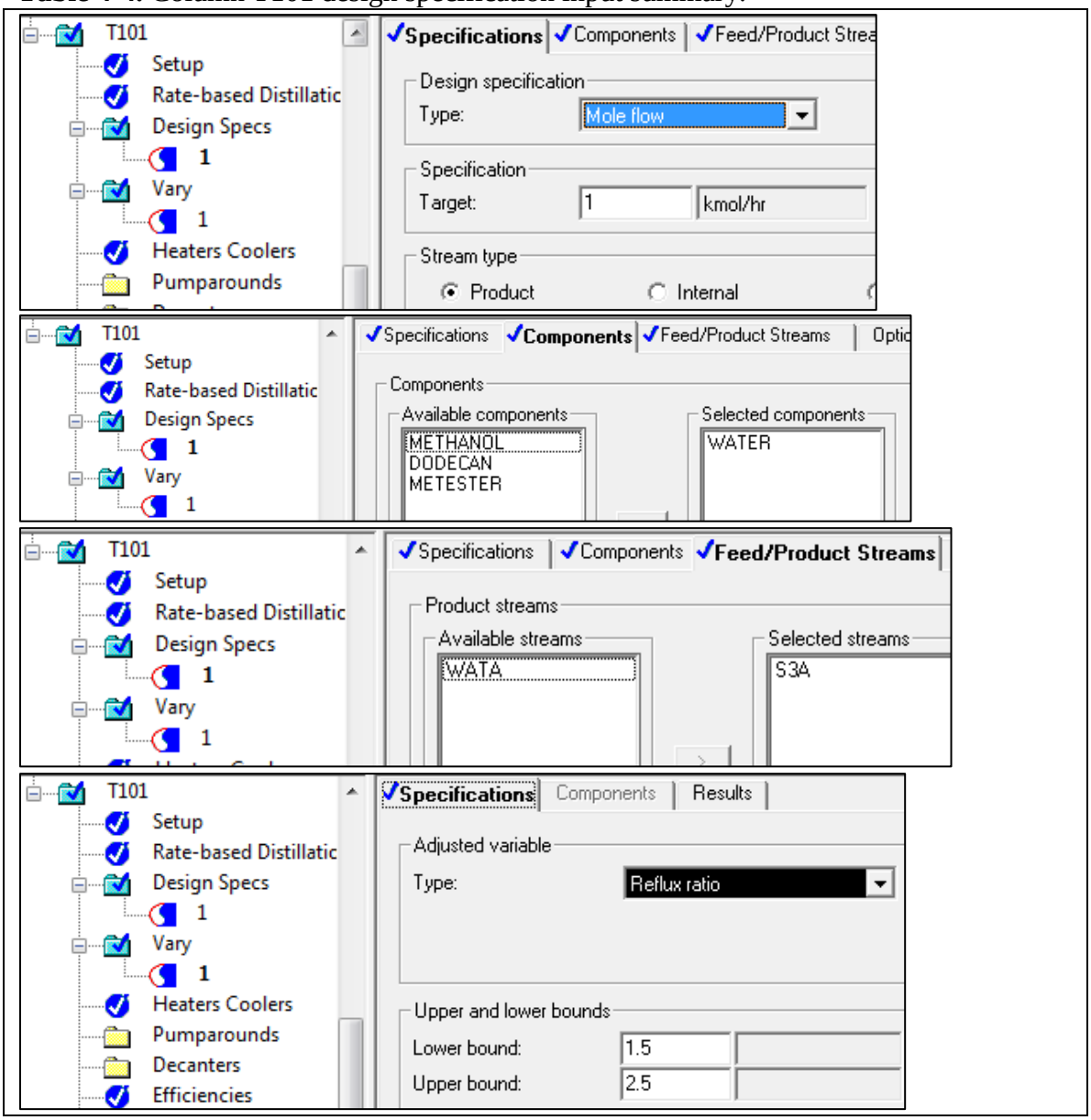

The thermally coupled column has a side withdrawal with a flow rate of 7 kmol/h at stage 10, which is connected to the top stage of the reactive distillation column RD101. Both the reboiler duty and ester mass fraction in the bottom decrease as the flow rate of stream S4A is reduced as indicated in Fig. 4-6. Table D-3 shows the sensitivity analysis results of flow rate of stream S4A on ester mass fraction at bottom and reboiler duty. The ester mass fraction is 99.2 wt% when stream S4A flow rate is 7 kmol/h. Stream S4A is pressurized by pump P102 to match the pressure in column RD101. The reboiler and condenser duties required for the base case sequence are 2136.23 kW and -2375.23 kW, respectively, while they are 1067.38 kW and -3409.62 kW, respectively, for the thermally coupled sequence.

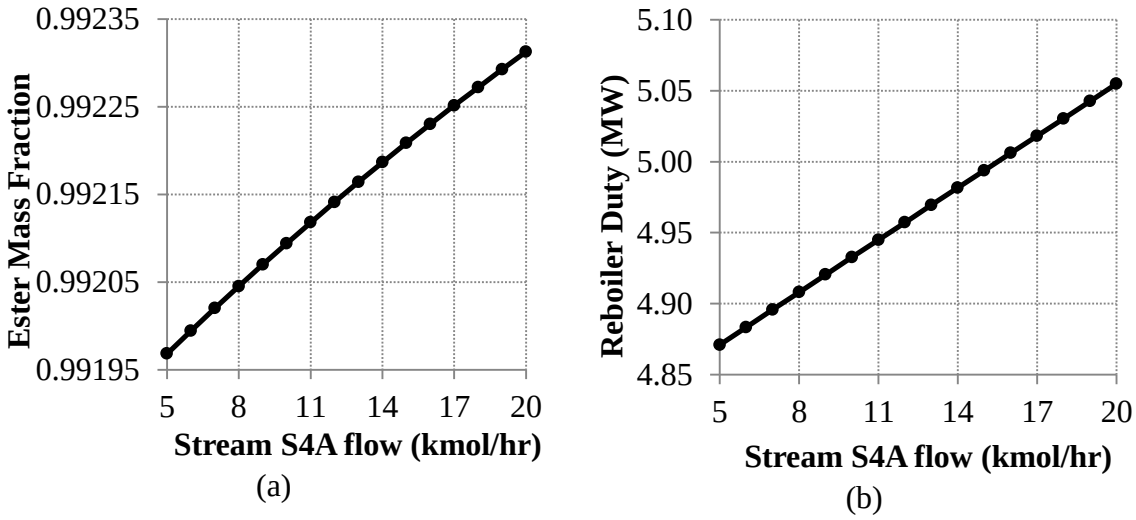

Fig. 4-6. Sensitivity analysis of stream S4A flow rate on: (a) ester mass fraction in the bottom product stream; (b) column RD101 reboiler duty.

Fig. 4-7 compares the temperature and exergy loss profiles for column T101. Hydraulic analysis (Fig. 4-8a-d) shows that the actual liquid and vapor flow profiles are between the TIMF and HMF profiles. Stream WATMET is introduced at stages 9 and 10

of the base case and thermally coupled sequences, respectively, to minimize the distortions due to inappropriate feed placement as shown in Fig. 4-8e and f. A significant area beneath the CGCC pinch point between the ideal and actual enthalpy profiles of the thermally coupled column (Fig. 4-8f) suggests the scope for side condensing. A side condenser with a heat duty of -600 kW is installed on stage 6 to reduce the area gap. The overall summary of column T101 of the thermally coupled design is provided in Table D-4.

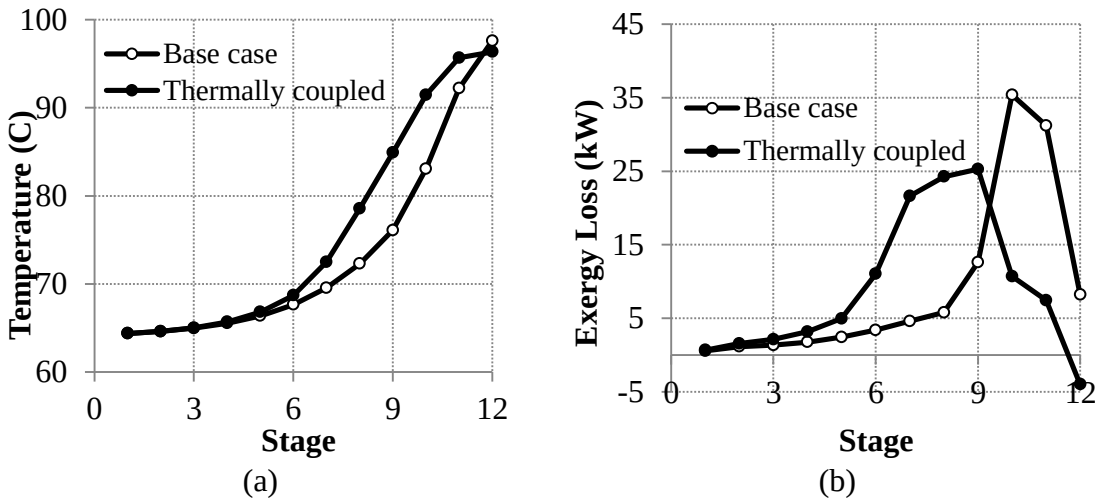

Fig. 4-7. Comparison of operating conditions for distillation column T101: (a) temperature profiles; (b) exergy loss profiles.

The stream properties and exergy values estimated are shown in Table 4-5. Table 4-6 summarizes the total exergy lossess and thermodynamic efficiencies of the both sequences. The efficiency of column RD101 increases from 46% to 63%, while the total exergy loss reduces by 281.35 kW in thermally coupled sequence.

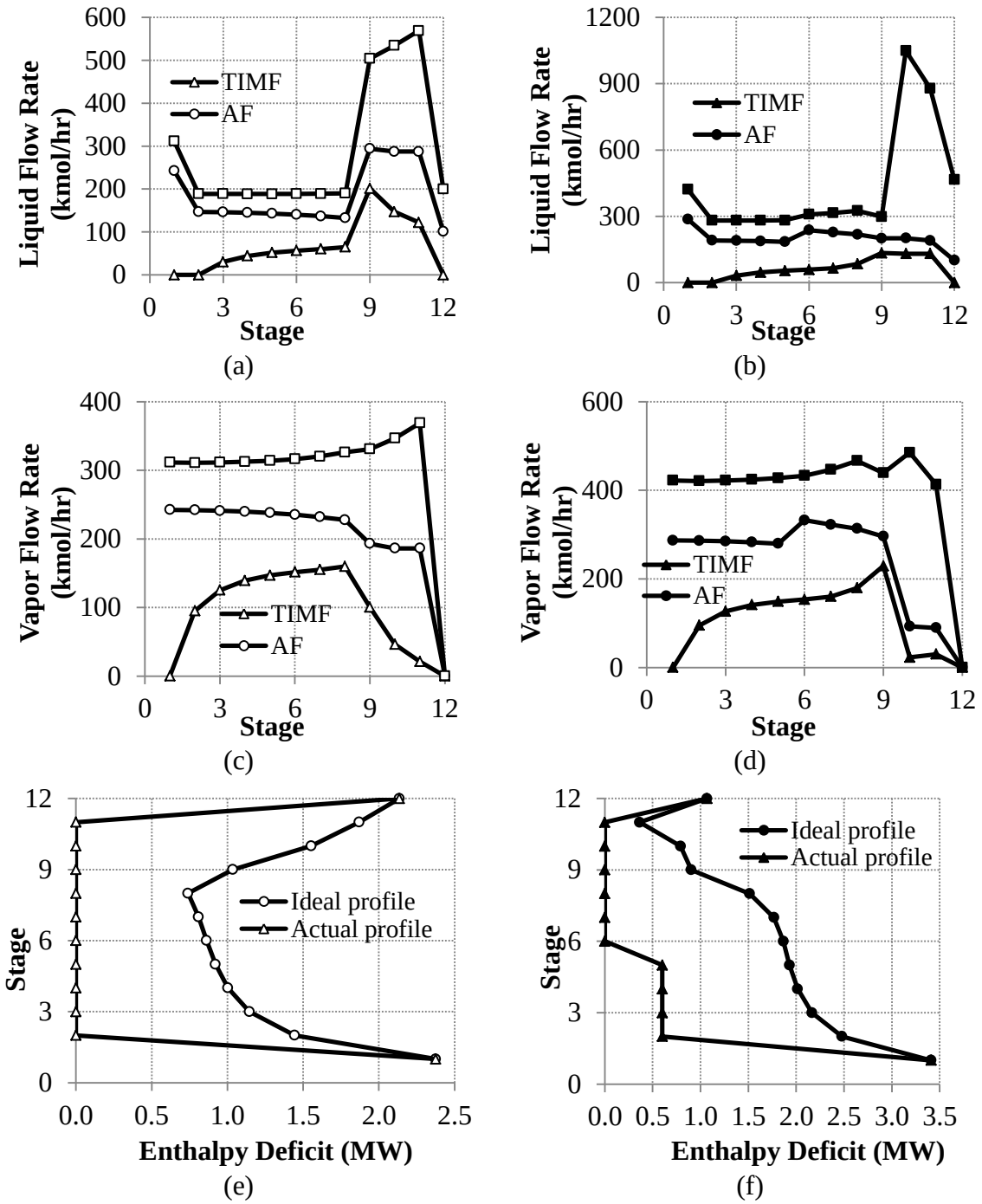

*TIMF-Thermodynamic ideal minimum flow; AF-Actual flow; HMF-Hydraulic maximum flow

Fig. 4-8. Hydraulic analysis and enthalpy deficit profiles for column T101: (a) stage-liquid flow rate profiles of base case design; (b) stage-liquid flow rate profiles of thermally coupled design; (c) stage-vapor flow rate profiles of base case design; (d) stage-vapor flow rate profiles of thermally coupled design; (e) stage-enthalpy deficit curves of base case design; (f) stage-enthalpy deficit curves of the thermally coupled design.

Table 4-5. Some of the streams properties for the base case and thermally coupled designs given in Fig. 4-3 [30].

	Base Case Design				Thermally Coupled Design			
Stream	$\dot{n}$ (kmol/h)	h (kJ/mol)	s (J/mol-K)	E_x (kW)	$\dot{n}$ (kmol/h)	h (kJ/mol)	s (J/mol-K)	E_x (kW)
S1	100	-703.98	-1255.47	-9157.24	100	-703.98	-1255.47	-9157.24
S2B	200	-228.82	-212.87	-9186.08	200	-228.82	-212.87	-9186.08
ESTERA	104	-519.37	-1012.14	-6286.31	104	-541.79	-1050.46	-6603.83
S4B	—	—	—	—	25	-278.11	-152.94	-1614.67
WATMET	196	-253.45	-170.72	-11027.47	221	-217.43	-82.96	-11828.90
S4A	—	—	—	—	25	-278.77	-154.61	-1615.77
S3A	95	-234.69	-226.71	-4409.42	95	-234.69	-226.71	-4409.42
WATA	101	-279.60	-147.01	-6614.73	101	-280.37	-149.25	-6617.34

Table 4-6. Minimum exergy of separation and thermodynamic efficiency estimations based on the converged simulation [30].

	Base Case Design			Thermally Coupled Design			
Column	$\dot{E}_{x,min}$ (kW)	$\dot{E}_{x,loss}$ (kW)	η	$\dot{E}_{x,min}$ (kW)	$\dot{E}_{x,loss}$ (kW)	η	Saved $\dot{E}_x$ (kW)
RD101	1029.54	1189.04	0.46	1525.26	907.31	0.63	281.73
T101	3.33	107.36	0.03	-813.62	108.74	0.88	-0.38
Total		1297.40			1016.05		281.35

4.5. Conclusions

Thermally coupled side-stripper reactive distillation sequence requires less energy and use one less condenser and hence results in lower capital investment and operating cost compared with the base case reactive distillation sequence. The thermally coupled sequence reduces the energy consumption by 13.1% in the reactive distillation column and 50.0% in the methanol recovery column. In the thermally coupled reactive distillation column, the content of water in the reaction zone is lower. This decreases liquid-liquid separation and protects solid catalyst from deactivation. The total exergy losses for the columns are reduced from 1297.40 kW to 1016.05 kW indicating a significant amount of

available energy saving and operation with less thermodynamic imperfections in thermally coupled sequence.

Nomenclature

AF	Actual flow
CGCC	Column grand composite curve
BCRD	Base case reactive distillation
E_x	Total Exergy, kW
HMF	Hydraulic maximum flow
PNMTC	Practical near-minimum thermodynamic condition
RD	Reactive distillation
s	Molar entropy, kJ/kmol K
T	Temperature, K
TA	Thermodynamic analysis
TCRD	Thermally coupled reactive distillation
TIMF	Thermodynamic ideal minimum flow

Greek Symbols

η	Efficiency

Subscripts

Min	Minimum

References

1. Khalifa, M., Emtir, M. 2009. Rigorous optimization of heat-integrated and Petlyuk column distillation configurations based on feed conditions. Clean Technol Environ Policy 11, 107-13.

2. Demirel, Y. 2006. Retrofit of distillation columns by thermodynamic analysis. Sep Sci Technol 41, 791-817.

3. Nakaiwa, M., Huang, K., Owa, M., et al. 1997. Energy savings in heat-integrated distillation columns. Energy 22, 621-625.

4. Demirel, Y. 2004. Thermodynamic analysis of separation systems. Sep Sci Technol 39, 3897-3942.

5. Nguyen, N., Demirel. Y. 2010. Retrofit of distillation columns in biodiesel production plants. Energy 35, 1625-1632.

6. Demirel, Y. 2006. Assessment of thermodynamic performances for distillation columns. Int J Exergy 3, 345-361.

7. Nguyen, N., Demirel, Y. 2010 Nov 7-12. Reactive distillation column esterification of lauric with methanol: equilibrium vs. nonequilibrium approaches. 2010 AIChE Annual Meeting, Salt Lake City, Utah.

8. Araújo, A.B., Brito, R.P., Vasconcelos, L.S. 2007. Exergetic analysis of distillation processes – A case study. Energy 32, 1185-1193.

9. Kiss, A,A,, Pragt, J.J., van Strien, C.J.G. 2009. Reactive dividing-wall columns – defying equilibrium restrictions. Chem Prod Process Model 4, Article 2.

10. Omota, F., Dimian, A.C., Bliek, A. 2003. Fatty acid esterification by reactive distillation. Part 1: equilibrium-based design. Chem Eng Sci 98, 3159-3174.

11. Omota, F., Dimian, A.C., Bliek, A. 2003. Fatty acid esterification by reactive distillation: Part 2 –kinetics-based design for sulphated zirconia catalysts. Chem Eng Sci 58, 3175-3185.

12. Dimian, A.C., Bildea, C.S., Omota, F., et al. 2009. Innovative process for fatty acid esters by dual reactive distillation. Comput Chem Eng 33, 743-750.

13. Kiss, A.A., Dimian, A.C., Rothenberg, G. 2008. Biodiesel by catalytic reactive distillation powered by metal oxides. Energy Fuels 22, 598-604.

14. William, L., Cheng-Ching, Y. 2008. Reactive distillation design and control. New York: Wiley.

15. Malinen, I., Tanskanen, J. 2009. Thermally coupled side-column configurations enabling distillation boundary crossing. 1. An overview and solving procedure. Ind Eng Chem Res 48, 6387-6404.

16. Malinen, I., Tanskanen, J. 2009. Thermally coupled side-column configurations enabling distillation boundary crossing. 2. Effects of intermediate heat exchangers. Ind Eng Chem Res. 48, 6372-6386.

17. Rong, B-G., Kraslawski, A., Turunen, I. 2003. Synthesis of heat-integrated thermally coupled distillation systems for multicomponent separations. Ind Eng Chem Res 42, 4329-4339.

18. Rong, B-G., Turunen, I. 2006. Synthesis of new distillation systems by simultaneous thermal coupling and heat integration. Ind Eng Chem Res 45, 3830-3842.

19. Agrawal, R., Fidkowski, Z. 1998. Are thermally coupled distillation columns always thermodynamically more efficient for ternary distilltions? Ind Eng Chem Res 37, 3444-3454.

20. Asprion, N., Kaibel, G. 2010. Dividing wall columns: fundamentals and recent advances. Chem Eng Process: Process Intensif 49, 139-146.

21. Wang, S-J., Lee, H-Y., Ho, J-H. 2010. Plantwide design of ideal reactive distillation processes with thermal coupling. Ind Eng Chem Res 49, 3262-3274.

22. Gomez-Castro, F.I., Rico-Ramirez, V., Segovia-Hernandez, J.G., et al. 2010. Feasibility study of a thermally coupled reactive distillation process for biodiesel production. Chem Eng Process: Process Intensif 49, 262-269.

23. Errico, M., Rong, B-G., Tola, G. 2008. Process intensification for the retrofit of a multicomponent distillation plant – An industrial case study. Ind Eng Chem Res 47, 1975-1980.

24. Petlyuk, F.B. 2004. Distillation theory and its application to optimal design of separation units. United Kingdom: Cambridge.

25. Hernandez, S., Segovia-Hernandez, J.G., Rico-Ramirez, V. 2006. Themodynamically equivalent distillation schemes to the Petlyuk column for ternary mixtures. Energy 31, 2167-2183.

26. Barroso-Muñoz, F.O., Hernández, S., Segovia-Hernández, J.G., et al. 2007. Thermally coupled distillation systems: Study of an energy-efficient reactive case. Chem Bio Eng 2, 115-120.

27. Kansedo, J.B. 2009. Synthesis of biodiesel from palm oil and sea mango oil using sulfated zirconia catalyst [thesis]. Malaysia: Universiti Sains Malaysia.

28. Garcia, C.M., Teixeira, S., Marciniuk, L.L., et al. 2008. Schuchardt U. Transesterification of soybean oil catalyzed by sulfated zirconia. Bioresour Technol 99, 6608-6613.

29. Kiss, A.A., Dimian, A.C., Rothenberg, G. 2006. Solid acid catalysts for biodiesel production – towards sustainable energy. Adv Synth Catal 348, 75-81.

30. Nguyen, N., Demirel, Y., 2011. Using thermally coupled reactive distillation columns in biodiesel production. Energy 36, 4838-4847.

31. Chang, H., Li, Jr W. 2005. A new exergy method for process analysis and optimization. Chem Eng Sci 60, 2771-2784.

CHAPTER 5

A Novel Biodiesel and Glycerol Carbonate Production Plant

5.1. Introduction

In 2011, the United States produced approximately 1.1 billion gallons of biodiesel [1]. However, this capacity is not fully utilized. The US production of biodiesel is expected to grow with a target of 1.9 billion gallons by the year 2015 [2]. At this production level around 135 million gallons of bioglycerol will be produced. On the other hand, 9 billion gallons of bioethanol production emitted around 25.9 million metric tons of CO_2 in 2008, in the US alone [3].

The production cost of biodiesel ranges from \$0.65-\$1.50 per gallon. However, as the cost of feedstock of oil and lipid exceeds \$0.3/lb, the price of biodiesel needs to be above \$2.8/gallon [4]. Besides, there is an inverse relationship between the production cost of biodiesel and the variations in the market value of bioglycerol. The production cost of biodiesel increases by \$0.008/gal for every \$0.01/lb reduction in glycerol selling price [5]. Therefore, economical utilization schemes of bioglycerol can lead to more economical biodiesel production.

5.2. Products from Glycerol

Glycerol can be converted into more valuable products such as α,γ-dichlorohydrin, acrolein, dihydroxyacetone, hydrogen, ethers, and bioglycerol carbonate by selective glycerol-based catalytic processes such as chlorination, dehydration,

oxidation, reforming, telomerization, and carboxylation as shown in Table 5-1 [6-9]. Among them, synthesis of glycerol carbonate may be one of the most environmentally friendly reactions.

Glycerol carbonate can be obtained by reacts glycerol with cyclic organic carbonate in the presence of zeolites, or by glycerolysis of glycerol with urea in presence of Alkaline earth metal oxide, or by reacts glycerol with dimethyl carbonate in the presence of Candida Antarctica [10,11], or by direct carboxylation of glycerol with carbon dioxide under supercritical condition [6] or using transition metal alkoxides [11]. Synthesis of glycerol carbonate by direct carboxylation of bioglycerol and carbon dioxide may be the most feasible process due to the utilization of two by-products.

Table 5-1. Main processes that use glycerol as raw material [6-9].

Process	Catalysts	Main Product	Main Applications
Carboxylation	zeolites, Sn-based, or supercritial conditions	glycerol carbonate	production of polycarbonates and polyurethanes
Chlorination	acetic acid and heteropolyacid	Dichloropropanol	intermediate in the production of epichlorohydrin
Dehydration	acid catalysts	acrolein	chemical intermediate
		acrylic acid	plymers, resins, paints, acrylic fibers, etc.
Epicerol	carboxylic acids	epichlorohydrin	production of epoxy resins
Esterification	mesoporous materials	glycerides, polyglycerol esters	emulsifiers
		diacylglycerol, triacylglycerol	fuel additives
	chlorides, sulfates	monolaurin, dilaurin	pharmaceutical industry
Etherification	mesoporous materials	^{t}Bu ethers	fuel additives
	sulfates	MAGEs	pharmaceutical industry
	CaO-based	di- and tri-glycerol	
Fermentation	enzimes	1,3 propanediol	manufacture of polyesters
Glycerolysis	gold-based	glycerol carbonate	production of polycarbonates and polyurethanes
Halogenation	acetic acid	1,3-dichloropropanol	intermediate in epichlorohydrin synthesis
Hydrogenolysis	Ru/C or Cu-based	1,2 propanediol	chemical intermediate, antifreeze
Oxidation	Au, Pd, and Pt metals	dihydroxyacetone	making artificial suntans
		hydroxypyruvic acid	D,L-serine synthesis
Reforming	Pt-Re/C	syn. Gas	FT synthesis
	Pt or Ni based-catalysts	H_2	energy
Telomerization	homogeneous catalysts	C_8 chain ethers	surfactant chemistry

Glycerol carbonate is an intermediate chemical with many potential areas of application, such as, reactive protic solvent, a substitute for ethylene carbonate, propylene carbonate, cyclocarbonate derivatives, solvents for battery electrolyte, filming lubricants, filing plastifiers, agrosynthons, ingredients for cosmetics, and monomers for polymerization. It is also a novel component of gas separation membranes, coatings, paints and surfactants. It can act as a nonvolatile reactive solvent for several types of materials. In addition, it could serve as a source of new polymeric materials for the production of polycarbonates and polyurethanes [12].

5.3. Methods and Approaches

5.3.1. Process Simulation

Aspen Plus simulation package is used to design, develop, and simulate a conventional biodiesel production plant and a novel (biodiesel-glycerol carbonate production by direct carboxylation) plant. The conventional biodiesel production plant contains only the biodiesel production section while the novel plant contains the biodiesel production section and the glycerol carbonate production section. Economic analysis based on the deterministic and stochastic model is used to determine the most feasible process.

5.3.2. Reactions

5.3.2.1. Transesterification

Utilizing conventional homogeneous catalyst such as NaOH or KOH in transesterification requires at least three distillation columns and produces large amounts of waste water [13,14]. Besides, the homogeneous catalyst is not reusable. Unlike homogeneous catalyst, heterogeneous catalyst can be regenerated and reused leading to reduction in separation steps and simplified biodiesel production process [15-17]. However, using heterogeneous catalyst requires higher alcohol/oil molar ratio [18,19]. In this study, Ca3La1 is used to catalyst the transesterification reaction, shown below

$$\text{Triglyceride} + \text{Methanol} \xrightarrow{\text{Catalyst}} \text{Bioglycerol} + \text{Biodiesel}$$

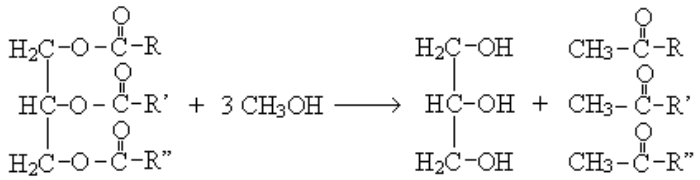

Ca3La1 show high activity even in the presence of water, tolerating up to 3.6% on the weight basis of free fatty acid. They are highly stable, can be reused three times in a batch stirred reactor, and highly active for 14 days in a continuous fixed bed reactor, which may be suitable for industrial application [20,21]. 94.3% conversion of oil is achieved when the reaction proceeds at 58°C and 1 bar for 1 hour using 5% weight of Ca3La1 catalyst. The molar ratio of methanol to oil is 20:1 [20]. In term of economic comparison, the cost of Ca3La1 is irrelevant since both plants use the same amount of catalyst and the net present value will increase proportionally.

5.3.2.2. Direct Carboxylation

Under optimum conditions, maximum conversion for the direct carboxylation of bioglycerol in the presence of tin catalysts such as *n*-$Bu_2Sn(OMe)_2$ is around 7 to 10 percent [22,23].

$$\text{Bioglycerol} + CO_2 \xrightarrow{\text{Catalyst}} \text{Bioglycerol carbonate} + \text{Water}$$

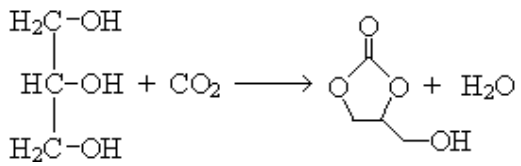

A conversion of 32.15 % can be achieved under supercritical CO_2 in the presence of zeolites and ion exchange resins [24]. However, excessive pressure results in higher equipment and operating costs. Finding a stable catalyst with a reasonable yield is crucial for reusing the catalyst and obtaining high conversion of bioglycerol. A recent study shows that 25% conversion is possible at 120°C and 13.8 MPa using 1 mol% of *n*-dibutyltin(IV)oxide (n-Bu_2SnO) and methanol as solvent [25].

5.4. Base Case and Novel Biodiesel Production Plants

5.4.1. Base Case Biodiesel Production Plant

The base case biodiesel production plant, shown in Fig. 5-1, utilizes methanol and triglyceride to produce fatty acid methyl ester (FAME) and glycerol using lanthanum and calcium as catalyst. The stream properties are summarized in Table 5-2, which is obtained by using Aspen Plus V7.2 with the thermodynamic model of UNIF-DMD.

Overall, the base case biodiesel production plant consumes 704.88 kg/hr of methanol and 6215.15 kg/hr of oil to produce 6222.57 kg/hr of FAME and 664.01 kg/hr of bioglycerol and methanol as indicated in Table 5-2.

Recycled and fresh methanol and oil are mixed in mixers M101 and M102 before they are fed into the reactor R101. Under 58°C and 1 bar, 94.3% conversion of triglyceride is achieved [20]. The reactor effluent, stream S3, containing mixture of catalyst, products, and unreacted reactants, is sent to separator SEP101 to recover Ca3La1. The outlet stream S4 enters flash drum F101 to recover the excess methanol. Fig. 5-2 shows that both the molar flow rates of methanol and glycerol in the recycle stream R3 increase as the temperature of the flash drum, F101, increases. The increase in the molar flow rate of glycerol in stream R3 is relatively sharper after 129°C as indicated in Fig. 5-2b. Therefore, the operating temperature of the flash drum, F101, is set to 128.35^{o}C by a design specification block to control the flow rate of glycerol in stream R3 as shown in Table 5-3.

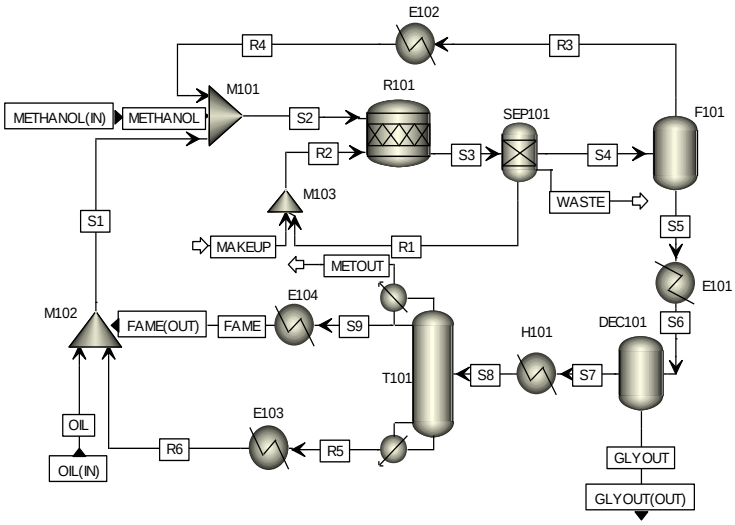

Fig. 5-1. Process flow diagram of the base case biodiesel production plant [26].

Table 5-2. Streams properties of the base case biodiesel production plant shown in Fig. 5-1.

	FAME	GLYOUT	METHANOL	METOUT	OIL	R3	R4	R5	R6
Mass Flow kg/hr									
METHANOL	1.03E+00	3.36E+01	7.05E+02	1.13E+01	0.00E+00	3.94E+03	3.94E+03	7.52E-18	7.52E-18
OIL	1.45E+02	3.83E-12	0.00E+00	8.18E-01	6.22E+03	1.69E+01	1.69E+01	2.04E+02	2.04E+02
FAME	6.08E+03	6.10E-03	0.00E+00	2.08E+01	0.00E+00	1.67E+01	1.67E+01	8.60E+01	8.60E+01
GLYCEROL	3.69E-01	6.31E+02	0.00E+00	4.24E-03	0.00E+00	2.49E+01	2.49E+01	7.46E-06	7.46E-06
Mass Frac									
METHANOL	0.0002	0.0506	1.0000	0.3437	0.0000	0.9854	0.9854	0.0000	0.0000
OIL	0.0233	0.0000	0.0000	0.0249	1.0000	0.0042	0.0042	0.7039	0.7039
FAME	0.9765	0.0000	0.0000	0.6313	0.0000	0.0042	0.0042	0.2961	0.2961
GLYCEROL	0.0001	0.9494	0.0000	0.0001	0.0000	0.0062	0.0062	0.0000	0.0000
Total Flow kg/hr	6222.57	664.55	704.88	32.87	6215.15	3999.73	3999.73	290.39	290.39
Temperature C	25.00	25.00	25.00	192.93	25.00	128.35	25.00	246.32	25.00
Pressure bar	1	1	1	0.05	1	0.5	1	0.05	1
Liquid Frac	1	1	1	0	1	0	1	1	1

	S1	S2	S3	S4	S5	S6	S7	S8	S9
Mass Flow kg/hr									
METHANOL	7.52E-18	4.65E+03	3.99E+03	3.99E+03	4.60E+01	4.60E+01	1.23E+01	1.23E+01	1.03E+00
OIL	6.42E+03	6.44E+03	3.67E+02	3.67E+02	3.50E+02	3.50E+02	3.50E+02	3.50E+02	1.45E+02
FAME	8.60E+01	1.03E+02	6.20E+03	6.20E+03	6.18E+03	6.18E+03	6.18E+03	6.18E+03	6.08E+03
GLYCEROL	7.46E-06	2.49E+01	6.56E+02	6.56E+02	6.31E+02	6.31E+02	3.73E-01	3.73E-01	3.69E-01
Mass Frac									
METHANOL	0.0000	0.4145	0.3458	0.3557	0.0064	0.0064	0.0019	0.0019	0.0002
OIL	0.9868	0.5742	0.0318	0.0327	0.0485	0.0485	0.0535	0.0535	0.0233
FAME	0.0132	0.0092	0.5377	0.5531	0.8575	0.8575	0.9446	0.9446	0.9765
GLYCEROL	0.0000	0.0022	0.0569	0.0585	0.0876	0.0876	0.0001	0.0001	0.0001
Total Flow kg/hr	6505.54	11210.15	11530.54	11210.15	7210.38	7210.38	6545.83	6545.83	6222.57
Temperature C	25.00	22.51	58.00	58.00	128.35	25.00	25.00	200.00	192.93
Pressure bar	1	1	1	1	0.5	1	1	1	0.05
Liquid Frac	1	1	1	1	1	1	1	1	1

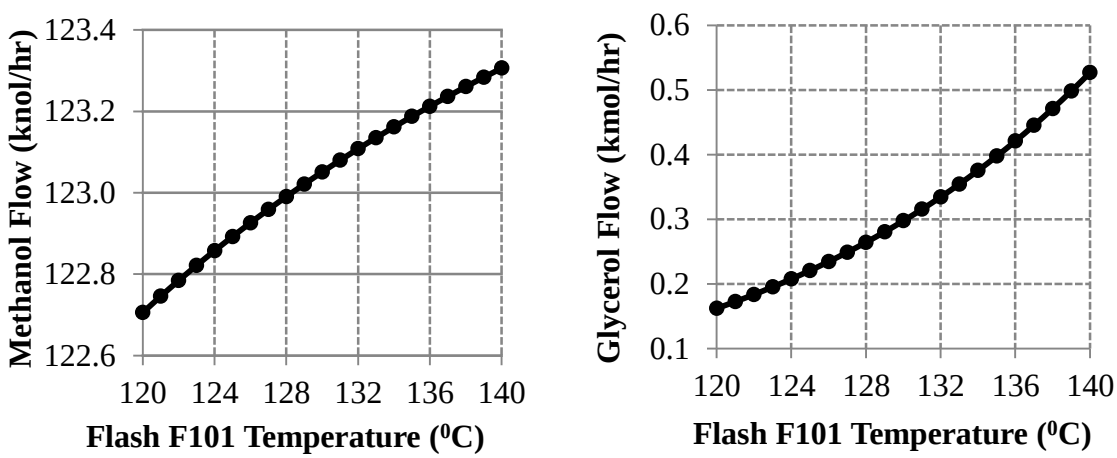

(a) (b)

Fig. 5-2. Sensivity analysis of flash column F101 temperature on: (a) molar flow rate of methanol in stream R3; (b) molar flow rate of glycerol in stream R3.

Table 5-3. Drum F101 design specification input summary.

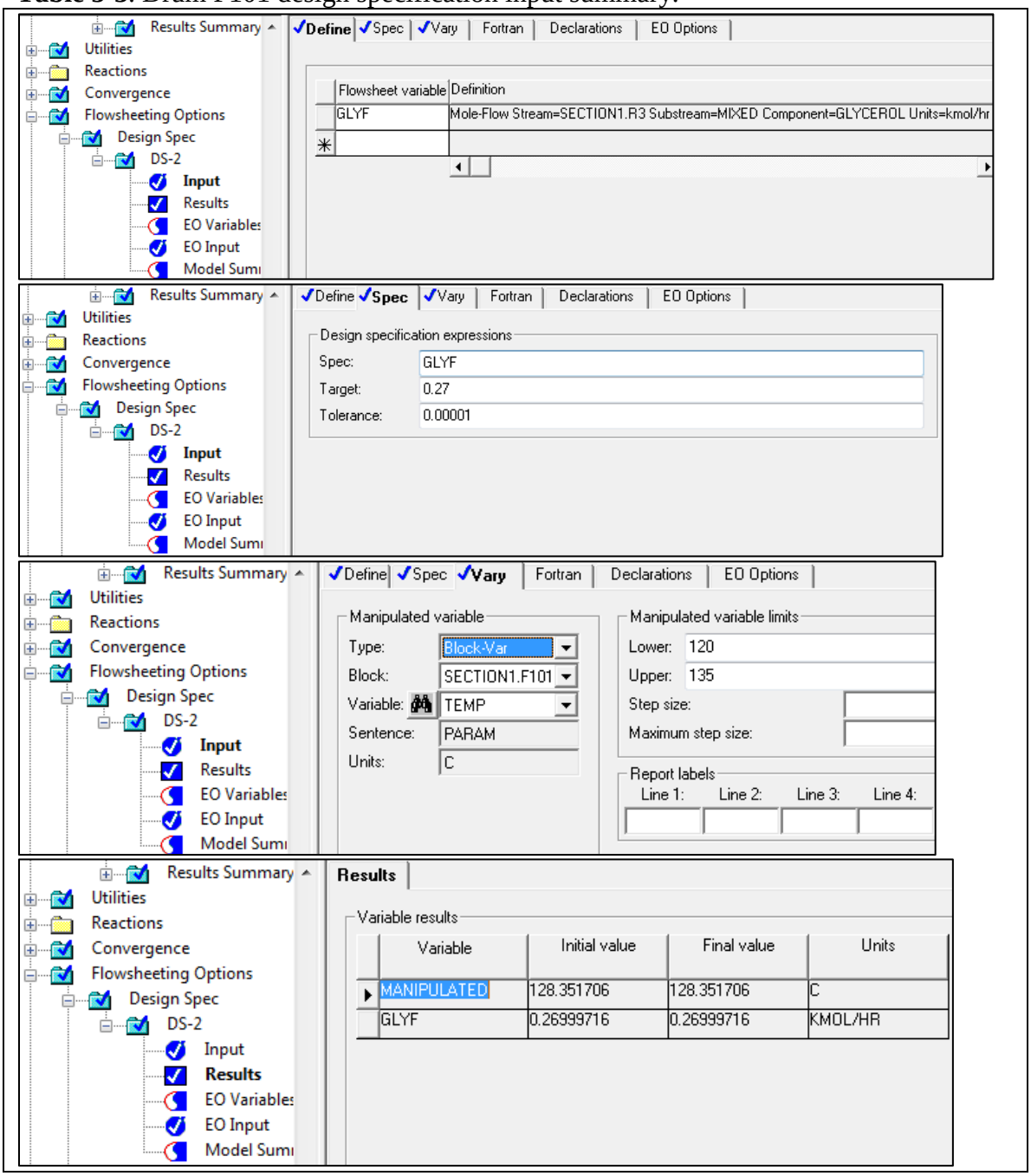

The bottom product (S5) of the flash drum, F101, is cooled to 25°C in cooler E101 before it is sent to the decanter DEC101 to separate glycerol. Stream S7, containing unused oil, FAME, and methanol, is preheated to 200°C before feeding to distillation

column T101 to minimize exergy losses caused by the temperature gradient [27-29]. Distillation column T101 operates with 7 equilibrium stages with a partial-vapor-liquid condenser and a kettle reboiler. The activity coefficient model NRTL-RK model is used to estimate the vapor and liquid properties in column T101. The following two design specifications are used to control the top and bottom flow rates of the distillation column, T101. The first design specification sets the flow rate of FAME in stream R5 to 0.29 kmol/hr by varying the distillate flow rate. The second design specification sets the flow rate of FAME to 0.07 kmol/hr in stream METOUT by varying the distillate vapor fraction. The distillate flow rate is 21.11 kmol/hr and the distillate vapor fraction is 0.02. The bottom stream containing mostly oil is recycled.

5.4.2. Novel Biodiesel Production Plant

The novel biodiesel production plant contains two sections as shown in Fig. 5-3a. Section 1 (Fig. 5-3b) produces biodiesel and bioglycerol with methanol and Section 2 (Fig. 5-3c) produces bioglycerol carbonate and water. Table E-1 provides the input summary of the novel plant. As seen in Fig. 5-3b, the locations of the decanter DEC101 and flash drum F101 are switched because of the separation of methanol from glycerol is undesirable since the methanol will be used as a solvent for the direct carboxylation of glycerol in Section 2. Section 1 of the novel biodiesel production plant uses 1050.98 kg/hr of methanol and 6205.31 kg/hr of oil to produce 6179.49 kg/hr of FAME and 4117.87 kg/hr of the stream, BY-PROD, containing 83.55%wt methanol as summarized in Table 5-4.

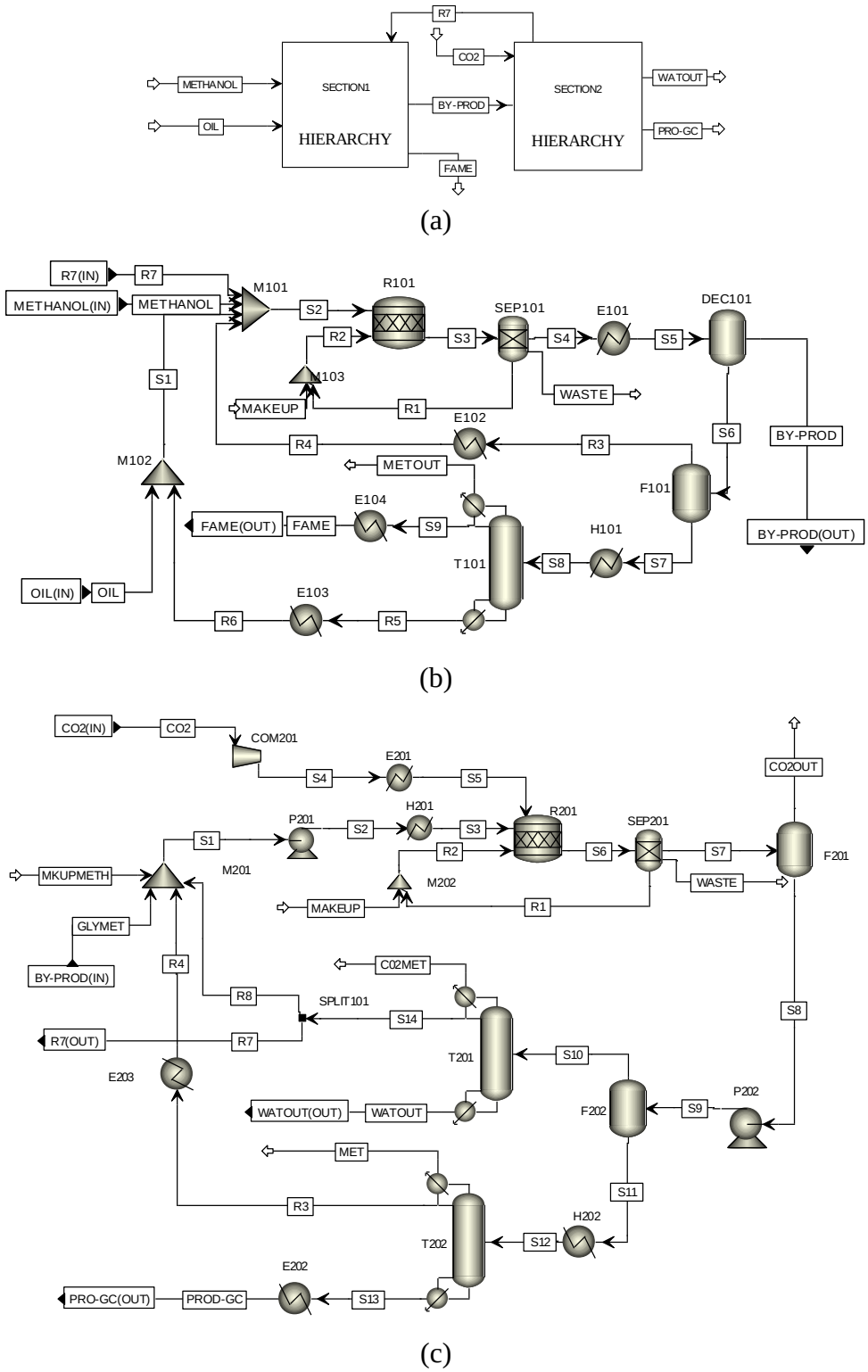

Fig. 5-3. (a) Hierarchy of the novel biodiesel production plant; (b) process flow diagram of Section 1 for biodiesel and bioglycerol production plant; (c) process flow diagram of Section 2 for bioglycerol carbonate production plant [26].

Table 5-4. Streams properties of the novel biodiesel production plant (Section 1) shown in Fig. 5-3b.

	BY-PROD	FAME	METHANOL	METOUT	OIL	R3	R4	R5	R6
Mass Flow kg/hr									
METHANOL	3.44E+03	1.36E+00	1.05E+03	1.26E+01	0.00E+00	5.51E+02	5.51E+02	7.23E-18	7.23E-18
OIL	3.30E-04	1.47E+02	0.00E+00	7.27E-01	6.21E+03	4.16E+00	4.16E+00	2.14E+02	2.14E+02
FAME	4.26E+01	6.03E+03	0.00E+00	1.19E+01	0.00E+00	1.48E+01	1.48E+01	8.60E+01	8.60E+01
GLYCEROL	6.30E+02	4.68E-01	0.00E+00	3.26E-03	0.00E+00	1.52E-01	1.52E-01	9.32E-06	9.32E-06
WATER	3.46E+00	4.07E-04	0.00E+00	1.66E-03	0.00E+00	8.81E-02	8.81E-02	1.73E-20	1.73E-20
CO2	1.74E+00	3.58E-04	0.00E+00	1.23E-02	0.00E+00	1.30E+00	1.30E+00	6.02E-25	6.02E-25
Mass Frac									
METHANOL	0.8355	0.0002	1.0000	0.5009	0.0000	0.9641	0.9641	0.0000	0.0000
OIL	0.0000	0.0238	0.0000	0.0288	1.0000	0.0073	0.0073	0.7136	0.7136
FAME	0.0104	0.9759	0.0000	0.4696	0.0000	0.0259	0.0259	0.2864	0.2864
GLYCEROL	0.1529	0.0001	0.0000	0.0001	0.0000	0.0003	0.0003	0.0000	0.0000
WATER	0.0008	0.0000	0.0000	0.0001	0.0000	0.0002	0.0002	0.0000	0.0000
CO2	0.0004	0.0000	0.0000	0.0005	0.0000	0.0023	0.0023	0.0000	0.0000
Total Flow kg/hr	4117.87	6179.49	1050.98	25.25	6205.31	571.65	571.65	300.19	300.19
Temperature C	25.00	25.00	25.00	180.49	25.00	158.26	25.00	246.67	25.00
Pressure bar	1	1	1	0.05	1	0.5	1	0.05	1
Liquid Frac	1	1	1	0	1	0	1	1	1

	R7	S1	S3	S4	S5	S6	S7	S8	S9
Mass Flow kg/hr									
METHANOL	3.06E+03	7.23E-18	4.01E+03	4.01E+03	4.01E+03	5.65E+02	1.40E+01	1.40E+01	1.36E+00
OIL	2.12E-15	6.42E+03	3.66E+02	3.66E+02	3.66E+02	3.66E+02	3.62E+02	3.62E+02	1.47E+02
FAME	5.56E-18	8.60E+01	6.19E+03	6.19E+03	6.19E+03	6.14E+03	6.13E+03	6.13E+03	6.03E+03
GLYCEROL	2.52E-14	9.32E-06	6.30E+02	6.30E+02	6.30E+02	6.24E-01	4.71E-01	4.71E-01	4.68E-01
WATER	3.46E+00	1.73E-20	3.55E+00	3.55E+00	3.55E+00	9.02E-02	2.07E-03	2.07E-03	4.07E-04
CO2	1.75E+00	6.02E-25	3.04E+00	3.04E+00	3.04E+00	1.31E+00	1.27E-02	1.27E-02	3.58E-04
Mass Frac									
METHANOL	0.9983	0.0000	0.3485	0.3578	0.3578	0.0799	0.0022	0.0022	0.0002
OIL	0.0000	0.9868	0.0319	0.0327	0.0327	0.0517	0.0556	0.0556	0.0238
FAME	0.0000	0.0132	0.5382	0.5526	0.5526	0.8681	0.9421	0.9421	0.9759
GLYCEROL	0.0000	0.0000	0.0548	0.0563	0.0563	0.0001	0.0001	0.0001	0.0001
WATER	0.0011	0.0000	0.0003	0.0003	0.0003	0.0000	0.0000	0.0000	0.0000
CO2	0.0006	0.0000	0.0003	0.0003	0.0003	0.0002	0.0000	0.0000	0.0000
Total Flow kg/hr	3066.31	6505.50	11493.49	11194.45	11194.45	7076.58	6504.94	6504.94	6179.49
Temperature C	63.60	25.00	58.00	58.00	25.00	25.00	158.26	200.00	180.49
Pressure bar	1	1	1	1	1	1	0.5	0.5	0.05
Liquid Frac	1	1	1	1	1	1	1	1	1

In section 2 (Fig. 5-3c), the stream GLYMET is mixed with the recycle stream R4 in mixer M201, and it is pressurized and heated to the reaction temperature before entering reactor R201. Stream GLYMET contains, by mass, 83.5% of methanol and 15.3% of glycerol, while stream R4 contains 99.3% glycerol. Carbon dioxide (CO_2) is compressed to 35 bars in compressor COM201 and cooled to 120°C in cooler E201

before it is fed to reactor R201. Table E-2 gives the summary of compressor COM201. The carboxylation reaction takes place at 120°C and 13.8 MPa of CO_2 using methanol as a solvent and 1 mole percent of n-dibutyltin(IV)oxide as catalyst. Table E-3 presents the summary of reactor R201. The methanol/glycerol molar ratio of 11.41 (in stream S3) is used in this simulation while 11.38 is used by George et al., 2009. 25% conversion is achieved [25]. In the actual biodiesel processes, impurities such as monoglycerides, diglycerides, triglycerides, etc., in glycerol may cause reduction in activity and stability of the catalyst. Thus, further investigation is required. Separator SEP201 is used to separate the catalyst from the reactor outlet with 50% of recovered, treated, and recycled to the reactor.

Design specification, DS-1, is set on flash drum F201 to control the flow rate of CO_2 by varying the column operating pressure as shown in Table E-4. Flash drum F201 removes excess CO_2 operating at an absolute pressure of 0.181 bar. The summary of drum F201 is shown in Table E-5. The bottom product of F201, stream S8, is pressurized to 1 bar in pump P202 upon entering flash drum F202 to separate water and methanol from glycerol and glycerol carbonate. Table E-6 presents the summary of drum F202. The top product of T201, stream S10, containing methanol and water is fed to distillation column T201 at stage 5. Column T201 operates with 7 equilibrium stages with a kettle reboiler and a partial vapor-liquid condenser. The reboiler and condenser duties are 7,567.81 kW and 10,101.13 kW, respectively. The NRTL-RK model is used to predict the phase-equilibrium in distillation column T201. The distillate of T201, stream S14, contains high concentration of methanol, and is recycled to Sections 1 and 2, while

streams CO2MET and WATOUT are treated as waste. Table E-7 provides the summary of column T201.

The bottom product of flash column F202, stream S11, is preheated to 160°C, and fed to stage 10 of distillation column T202 [27-29]. The column T202 has 15 stages. The distillate, stream R3, contains mostly glycerol, which is recycled. The bottom product, stream S13, with a total flow rate of 663.71 kg/hr and 91.59% on the weight basis is the glycerol carbonate. The summary of column T202 is presented in Table E-8. Glycerol carbonate properties are approximated based on the structural information obtained using the group contribution model of UNIF-DMD. The glycerol carbonate production section (Section 2) utilizes 273.74 kg/hr of carbon dioxide, 629.57 kg/hr of glycerol to produce 663.71 kg/hr of glycerol carbonate and 209.46 kg/hr of water as shown in Table 5-5. Aspen Plus version V7.2 is used for all the simulations.

Table 5-5. Streams properties of the glycerol carbonate production plant (Section 2) shown in Fig. 5-3c.

	CO2MET	CO2	CO2OUT	GLYMET	MET	MKUPMETH	PROD-GC	R3	R4	R7	R8	S1	S2
Mass Flow kg/hr													
METHANOL	1.60E+02	0.00E+00	1.33E+02	3.44E+03	1.04E+02	5.63E+01	1.21E-20	6.82E-01	6.82E-01	3.06E+03	4.12E+03	7.61E+03	7.61E+03
FAME	3.26E-25	0.00E+00	3.92E-05	4.26E+01	3.47E+00	0.00E+00	5.02E-17	1.14E-01	1.14E-01	5.56E-18	7.48E-18	4.28E+01	4.28E+01
GLYCEROL	2.12E-20	0.00E+00	4.52E-05	6.30E+02	6.18E+01	0.00E+00	5.58E+01	1.29E+03	1.29E+03	2.52E-14	3.38E-14	1.92E+03	1.92E+03
WATER	4.42E-02	0.00E+00	6.48E-01	3.46E+00	9.49E-01	0.00E+00	1.12E-24	4.18E-03	4.18E-03	3.46E+00	4.65E+00	8.11E+00	8.11E+00
CO2	4.69E+00	2.74E+02	3.98E+01	1.74E+00	1.62E-02	0.00E+00	2.60E-29	1.27E-05	1.27E-05	1.75E+00	2.35E+00	4.08E+00	4.08E+00
GC	5.82E-23	0.00E+00	1.46E-05	0.00E+00	1.80E-01	0.00E+00	6.08E+02	8.27E+00	8.27E+00	1.94E-16	2.60E-16	8.27E+00	8.27E+00
Mass Frac													
METHANOL	0.9713	0.0000	0.7669	0.8355	0.6096	1.0000	0.0000	0.0005	0.0005	0.9983	0.9983	0.7934	0.7934
FAME	0.0000	0.0000	0.0000	0.0104	0.0204	0.0000	0.0000	0.0001	0.0001	0.0000	0.0000	0.0045	0.0045
GLYCEROL	0.0000	0.0000	0.0000	0.1529	0.3633	0.0000	0.0841	0.9930	0.9930	0.0000	0.0000	0.2000	0.2000
WATER	0.0003	0.0000	0.0037	0.0008	0.0056	0.0000	0.0000	0.0000	0.0000	0.0011	0.0011	0.0008	0.0008
CO2	0.0284	1.0000	0.2293	0.0004	0.0001	0.0000	0.0000	0.0000	0.0000	0.0006	0.0006	0.0004	0.0004
GC	0.0000	0.0000	0.0000	0.0000	0.0011	0.0000	0.9159	0.0064	0.0064	0.0000	0.0000	0.0009	0.0009
Total Flow kg/hr	164.94	273.74	173.44	4117.87	170.16	56.28	663.71	1298.39	1298.39	3066.32	4122.03	9594.57	9594.57
Temperature C	63.84	25.00	25.00	25.00	134.65	25.00	25.00	134.65	25.00	63.60	63.60	43.42	51.83
Pressure bar	1	1	0.18	1	0.01	1	1	0.01	1	1	1	1	138
Liquid Frac	0	0	0	1	0	1	1	1	1	1	1	1	1

	S3	S4	S5	S6	S7	S8	S9	S10	S11	S12	S13	S14	WATOUT
Mass Flow kg/hr													
METHANOL	7.61E+03	0.00E+00	0.00E+00	7.61E+03	7.61E+03	7.48E+03	7.48E+03	7.38E+03	1.04E+02	1.04E+02	1.21E-20	7.18E+03	3.88E+01
FAME	4.28E+01	0.00E+00	0.00E+00	4.28E+01	4.28E+01	4.28E+01	4.28E+01	3.92E+01	3.59E+00	3.59E+00	5.02E-17	1.30E-17	3.92E+01
GLYCEROL	1.92E+03	0.00E+00	0.00E+00	1.44E+03	1.44E+03	1.44E+03	1.44E+03	3.22E+01	1.41E+03	1.41E+03	5.58E+01	5.90E-14	3.22E+01
WATER	8.11E+00	0.00E+00	0.00E+00	1.02E+02	1.02E+02	1.01E+02	1.01E+02	1.00E+02	9.53E-01	9.53E-01	1.12E-24	8.11E+00	9.22E+01
CO2	4.08E+00	2.74E+02	2.74E+02	4.86E+01	4.86E+01	8.80E+00	8.80E+00	8.79E+00	1.62E-02	1.62E-02	2.60E-29	4.10E+00	6.70E-09
GC	8.27E+00	0.00E+00	0.00E+00	6.23E+02	6.23E+02	6.23E+02	6.23E+02	7.09E+00	6.16E+02	6.16E+02	6.08E+02	4.54E-16	7.09E+00
Mass Frac													
METHANOL	0.7934	0.0000	0.0000	0.7712	0.7714	0.7715	0.7715	0.9752	0.0490	0.0490	0.0000	0.9983	0.1853
FAME	0.0045	0.0000	0.0000	0.0043	0.0043	0.0044	0.0044	0.0052	0.0017	0.0017	0.0000	0.0000	0.1870
GLYCEROL	0.2000	0.0000	0.0000	0.1458	0.1458	0.1484	0.1484	0.0043	0.6599	0.6599	0.0841	0.0000	0.1536
WATER	0.0008	0.0000	0.0000	0.0103	0.0103	0.0104	0.0104	0.0133	0.0004	0.0004	0.0000	0.0011	0.4402
CO2	0.0004	1.0000	1.0000	0.0049	0.0049	0.0009	0.0009	0.0012	0.0000	0.0000	0.0000	0.0006	0.0000
GC	0.0009	0.0000	0.0000	0.0632	0.0632	0.0643	0.0643	0.0009	0.2890	0.2890	0.9159	0.0000	0.0338
Total Flow kg/hr	9594.57	273.74	273.74	9871.30	9868.31	9694.87	9694.87	7562.61	2132.26	2132.26	663.71	7188.34	209.46
Temperature C	120.00	448.82	120.00	120.00	120.00	25.00	25.05	140.00	140.00	160.00	182.14	63.84	90.97
Pressure bar	138	138	138	138	138	0.18	1	1	1	1	0.01	1	1
Liquid Frac	1	0	0	1	1	1	1	0	1	1	1	1	1

5.5. Economic Analysis

5.5.1. Deterministic Model

Fix capital investment (FCI) is set equal to the grassroots cost (C_{GR}), which is approximated by the following equation [30]

$$C_{GR} = 1.68\sum_{i=1}^{n} C_{Bm,i}^{o} \tag{5-1}$$

where $C_{Bm,i}^{o}$ is the bare module cost of equipment *i* at base conditions. The bare module costs of major equipment $C_{Bm,i}^{o}$ are estimated using the CAPCOST 2008 program and the chemical engineering plant cost index (CEPCI) of 580 for the year 2011 [31]. The FCI of the base case biodiesel plant is $17,429,160 and the cost of the novel biodiesel production plant is $29,276,352 as shown in Table 5-6. Land (L) and working capital (WC) are assumed equal to 5% and 20% of FCI, respectively. Cost of manufacturing (*COM*) without depreciation is given by [30]

$$COM = 0.18FCI + 2.73C_{OL} + 1.23\left(C_{UT} + C_{WT} + C_{RM}\right) \tag{5-2}$$

where the costs of utilities (C_{UT}), labor (C_{OL}), waste treatment (C_{WT}) and raw materials (C_{RM}) are shown in Table 5-6. Table 5-7 shows the cost of utilities of each equipment for both designs provided by Aspen Plus V7.2 based on 8400 hr/year of the plant operation. The reported costs of low and medium pressure steam, cooling water, and electricity [32] are updated using the 2011 CEPCI of 580. Number of employee (N_{OL}) is estimated by [30]

$$N_{OL} = \left(6.29 + 31.7P^{2} + 0.23N_{np}\right)^{0.5} \tag{5-3}$$

where P is the number of processing steps and N_{np} is the summation of number of equipment such as compressors, towers, reactors, heaters, and exchangers.

Table 5-6. Major cost factors of the biodiesel production plants [26].

	Base case	**Novel**
Fixed capital investment (FCI), $	17,429,160.00	29,276,352.00
Land (L), $ (5% of FCI)	871,458.00	1,463,817.60
Working capital (WC), $ (20% of FCI)	3,485,832.00	5,855,270.40
Labor, $/hr	30*	30*
Operating labor	14	16
Cost of labor (COL), $	3,528,000.00	4,032,000.00
Cost of Electricity, $/kW-h	0.066645	0.066645
Cost of cooling water, $/kg	0.000022	0.000022
Cost of 1 bar steam, $/kg	0.002370	0.002370
Cost of 35 bar steam, $/kg	0.016567	0.016567
Cost of utilities (CUT), $	379,373.44	893,016.69
Waste treatment, $/kg	0.37	0.37
Total cost of waste treatment, $	101,274.25	1,120,221.48
Cost of methanol, $/gal	0.75	0.75
Cost of oil, $/barrel	93	93
Cost of CO_2, $/kg	0.045	0.045
Cost of raw materials, $	48,279,209.20	50,014,016.70
Cost of manufacturing (COM), $	72,743,312.76	80,270,626.84
Price of FAME, $/gal	4.65	4.65
Price of crude glycerol, $/kg	0.30	0.30
Price of GC, $/kg	2.40	2.40
Revenue (R), $/year	76,544,530.76	90,155,368.09
Salvage value (S), $ (5% of FCI)	871,458.00	1,463,817.60
Taxation rate (t), %	0.35	0.35
Years of operation (n)	12	12
Years of depreciation (k)	5**	5**
Operational time, h/year	8400	8400
Interest rate (i), %	5	5

* Updated using CEPCI = 580 (Turton et al., 2008); ** Less taxes paid when the project is depreciate as soon as possible.

Table 5-7. Utilities of the base case and novel plants.

Base case plant (Fig. 5-1)

Section 1	$/oper-year
E101	2758.18
E102	9477.01
E103	259.46
E104	3985.00
H101	18490.52
R101	211280.54
SEP101	710.96
F101	43850.21
T101 (C+R)	88561.55
Total	**379373.44**

Novel plant (Fig. 5-3)

Section 1	$/oper-year	Section 2	$/oper-year
E101	1523.14	COM201	18142.25
E102	1383.04	E201	208.38
E103	268.75	E202	297.94
E104	3619.16	E203	615.54
H101	4971.19	H201	100307.20
R101	145478.11	H202	1036.41
SEP101	665.84	P201	55195.65
DEC101	15040.10	P202	320.36
F101	18929.35	R201	17759.42
T101 (C+R)	93693.02	SEP201	23.42
Total	**285571.70**	F201	5643.64
		F202	81298.83
		T201 (C+R)	267336.98
		T202 (C+R)	59258.95
		Total	**607444.99**

The total cost of labor summarized in Table 5-6 is calculated based on 8400 hr/year of the plant operation. The cost of waste disposal is $0.37/kg [32]. The price of oil and methanol are $93.0/barrel and $0.75/gal, respectively. The current selling price of products is presented in Table 5-6. With the inclusion of tax incentive and renewable

index number, biodiesel producers can get up to $2.80/gallon in addition to the market price of biodiesel [33,34], making the selling price of biodiesel approximately equal to $4.65/gallon. Salvage (S) value is 5% of FCI [30]. The useful life of the plants, taxation rate (t), depreciation and interest rate are also presented in Table 5-5.

The novel biodiesel production plant requires higher capital investment but generates higher revenue due to the value of glycerol carbonate. The book values (*BV*) are defined by

$$BV_k = FCI - \sum_{1}^{k} d_k^{MACRS} \tag{5-4}$$

and are evaluated using the modified accelerated cost recovery system (MACRS) depreciation method for 5 years [30]. Cash flows (*CF*) is determined by [30]

$$CF = \left(R - COM - d_k^{MACRS}\right)\left(1 - t\right) + d_k^{MACRS} \tag{5-5}$$

where *R* is the revenue and *t* is the tax. In the deterministic model, based on the most likely economic data considered in Table 5-6, discounted cash flows (DCF) and cumulative discounted cash flows (CDCFs) are estimated. The plot of DCCFs versus years of operation yields the feasibility criteria of net present value (NPV), payback period (PBP), and rate of return (ROR).

5.5.2. Stochastic Model

In reality, over the years of operation, the prices of a product, labor, energy, and raw material change leading to fluctuations in the economic data considered in Table 5-6. Stochastic model uses probability analysis to quantify uncertainty of major economic data. Normal, beta, rectangular, triangular, trapezoidal, and discrete probability density functions are often used to describe uncertainty in data [35]. Normal distribution function asymptotes to infinity, whereas the factors affecting the profitability of a chemical process fluctuation are bound by upper and lower limits. Therefore, usage of normal distribution probability curve to describe the fluctuation of data in a chemical process is not suitable. Beta distribution shape is not symmetrical and one end asymptote to infinity. Rectangular distribution is the simplest form of distribution but it is deficient due to equal distribution in the middle of the range and the extreme values. The trapezoidal distribution requires four data items, two extreme values and two values for the range in which the most likely values appear. The discrete distribution is not continuous. Triangular cumulative probability function (*P(x)*) is quite adequate for most investment since it does not asymptote to infinity [30]

$$P(x) = \frac{(x-a)^2}{(c-a)(b-a)} \qquad \text{for } x \le b \tag{5-6}$$

$$P(x) = \frac{(b-a)}{(c-a)} + \frac{(x-b)(2c-x-b)}{(c-a)(c-b)} \qquad \text{for } x > b \tag{5-7}$$

where *a* is the estimate of the lowest value, *b* is the most likely value and *c* is the estimate of the highest value as shown in Fig. 5-4. Since *P(x)* (random number), *a*, *b*, and *c* are

known, the above equation can be solved for *x*, which will yield two solutions. However, one will lie outside the interval (lower than *a* or higher than *c*) and will be disregarded.

Monte-Carlo method can be used by the following steps:

Step 1: Identify all of the parameters for which uncertainty is to be quantified. Some of the factors affecting probability analysis and their probable variation from forecasts are shown in Table 5-8 [30]. For instance, the cost of fixed capital investment fluctuates from -10 to +25% of the average or most likely value. Let's assume that the FCI of a typical chemical plant obtained from CAPCOST software is $20 million. From Table 5-8, its value can fluctuate from $18 million (90% of $20 million) to $25 million (125% of $20 million).

Table 5-8. Range of variation of factors affecting the profitability of a chemical process [30].

Factor in Profitability Analysis	**Probable Variation from Forecasts over 10-year Plant Life, %**
Cost of fixed capital investment	-10 to +25
Construction time	-5 to +50
Start-up costs and time	-10 to +100
Sales volume	-50 to +150
Price of product	-50 to +20
Plant replacement and maintenance costs	-10 to +100
Income tax rate	-5 to +15
Inflation rates	-10 to +100
Interest rates	-50 to +50
Working capital	-20 to +50
Raw material availability and price	-25 to +50
Salvage value	-100 to +10
Profit	-100 to +10

Step 2: Assign probability distributions for all parameters in Step 1. The cumulative probability function (P(x)) is bound between 0 and 1 as shown in Fig. 5-4 [30].

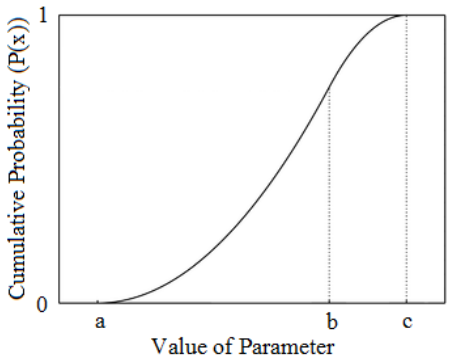

Fig. 5-4. Cumulative Probability Function for Triangular Distribution [30].

Step 3: Assign a random number for each parameter in Step 1. Rand() function in Microsoft's Excel program or similar spreadsheet can be used to generate random number. The random number lies between 0 and 1 are chosen for each variable.

Step 4: The value of the parameter is calculated by using probability function distribution P(x) (from step 2) by using the random number from Step 3. For example, assume that the FCI of a certain chemical plant is $20 million (so that *b* = $20 million) and the random number generate using Rand() function in Microsoft's Excel program is 0.6498. The best case scenario value (*a*) is $18.0 million (90% of *b*) and the worst scenario value (*c*) is $25 million (125% of *b*). Eq. (7) must be used since the value of the random number (0.6598) is greater than 0.5. The above values are then substituted for *P(x)* in Equation 7 to give

$$0.6498 = \frac{(20-18)}{(25-18)} + \frac{(x-20)(2(25)-x-20)}{(25-18)(25-20)} = 0.2857 + \frac{(x-20)(30-x)}{35}$$

Solving for x yields:

$$x = \frac{50 \pm \sqrt{(50^2 - (4)(1)(612.7435))}}{(2)(1)} = 25 \pm 3.5 = 21.5 \text{ or } 28.5 \text{ (impossible)}$$

Since 28.5 is higher than *c* (25), it is will be disregard.

Step 5: The profitability (NPV or other criterion) of the project can be calculated once values have been assigned to all parameters. In this step, the deterministic parameters will be replaced with the stochastic parameters to calculate NPV or other criterion.

Step 6: Repeat steps 3, 4, and 5 until a smooth cumulative probability curve is generated. CAPCOST software can be used to generate a smooth curve (usually more than 1000 data points) in no time.

Step 7: The cumulative probability curve can be plotted since a set of data involving random number and NPV already has been calculated from step 6.

Step 8: The profitability of the project can now be analyzed by using the results of Step 7. The results will be somewhat similar to the graph shown in Fig. 5-5 [30].

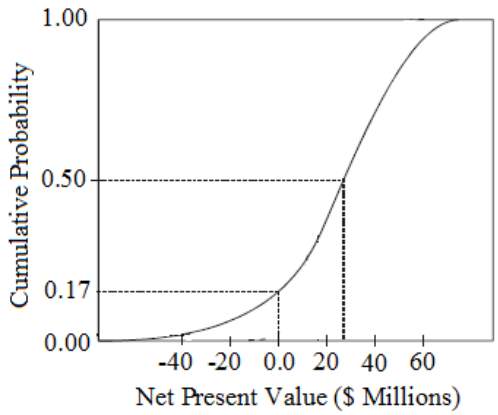

Fig. 5-5. Cumulative Probability of NPV for Monte-Carlo Simulation [30].

From Fig. 5-5, there is about 17% that the project will not be profitable and the median NPV is about 27 million.

Here, the uncertainties on the seven major economic parameters of fixed capital investment, price of product, working capital, income tax rate, interest rate, raw material price, and salvage value are considered for comparison as shown in Table 5-9.

Table 5-9. Uncertainties on some key parameters.

	Base case	**Novel**		
	Base value (b)	base value (b)	Lower Limit (a)	Upper Limit (c)
Fixed capital investment, $	17,429,160	29,276,352	-15%	20%
Price of product, $	76,544,531	90,155,368	-10%	10%
Working capital, $	3,485,832	5,855,270	-10%	15%
Income tax rate, %	35	35	-5%	5%
Interest rate, %	5	5	-10%	20%
Raw material price, $	48,279,209	50,014,017	-10%	15%
Salvage value, $	871458	1463818	-10%	10%

5.6. Results and Discussions

The market value of bioglycerol drop significantly due to its excess production as a by-product of the biodiesel production plant. Purification of glycerol in a small to medium scale biodiesel production plant is not an option due to high investment in separation units and low rate of return. As a result, direct conversion of glycerol into a value-added chemical, glycerol carbonate, reduces over production of glycerol and may improve the economics of the biodiesel plant. The process also consumes carbon dioxide, which is a renewable feedstock. In addition, glycerol carbonates has wide range of application, which can be used to produces valuable chemicals such as polymers, propylene carbonate, and cyclocarbonate derivatives.

Transesterification of triglyceride and methanol using solid catalyst requires higher methanol/oil molar ratio compared to homogeneous acid or base catalysts. Addition of glycerol carbonate production process directly uses of excess methanol as a

solvent in the direct carboxylation reaction. The energy requirement for methanol recovery in flash column F101 is reduced considerably in section 1 of the novel biodiesel production plant compared with the base case biodiesel production plant as shown in Table 5-7. Streams R1, R3, and R5 are treated as tear streams in the biodiesel production section of both biodiesel production plants while streams R1, R3, and R7 are treated as tear streams in section 2 of the novel biodiesel production plant.

Tables 5-10 and 5-11 show the cash flow calculations for the base case design and novel design, respectively. Fig. 5-6 shows the discounted cash flow diagrams generated using the deterministic model. As seen from Fig. 5-6, the net present value of the novel biodiesel plant is $24.47 million higher than the base case biodiesel plant at the end of 12-year project. Table 5-12 shows the results of the feasibility criteria of NPV, ROR, and PBP for the base case and novel operations obtained from the deterministic model. Any two of the criteria should be favorable for a feasible operation. The novel operation seems more favorable under current economic data considered in Table 5-6.

Table 5-10. Cash flow calculations of the base case design (Fig. 5-1) (All numbers in $\$10^6$).

Year	Investment	d_K^{MACRS}	BV	R	COM_d	CF	NDCF	DCF	CDCF	NDCCF
0	0.87		17.43				-0.87	-0.87	-0.87	-0.87
1	20.91		17.43				-20.91	-19.92	-20.79	-21.79
2		3.49	13.94	76.54	72.74	3.69	3.69	3.35	-17.44	-18.10
3		5.58	8.37	76.54	72.74	4.42	4.42	3.82	-13.62	-13.67
4		3.35	5.02	76.54	72.74	3.64	3.64	3.00	-10.63	-10.03
5		2.00	3.02	76.54	72.74	3.17	3.17	2.49	-8.14	-6.86
6		2.00	1.01	76.54	72.74	3.17	3.17	2.37	-5.77	-3.69
7		1.01	-	76.54	72.74	2.82	2.82	2.01	-3.77	-0.86
8			-	76.54	72.74	2.47	2.47	1.67	-2.09	1.61
9			-	76.54	72.74	2.47	2.47	1.59	-0.50	4.08
10			-	76.54	72.74	2.47	2.47	1.52	1.02	6.55
11			-	76.54	72.74	2.47	2.47	1.44	2.46	9.02
12			-	76.54	72.74	2.47	2.47	1.38	3.84	11.49
13			-	76.54	72.74	3.04	7.39	3.92	7.76	18.89

d_K^{MACRS} = Modified accelerated cost recovery system depreciation method, BV = Book values, R = Revenue, COM = Cost of manufacturing, CF = Cash flows, NDCF = Non-discounted cash flow, DCF = Discounted cash flow, CDCF = Cumulative discounted cash flow, NDCCF = Non-discounted cumulative cash flow.

Table 5-11. Cash flow calculations of the novel design (Fig. 5-3) (All numbers in $\$10^6$).

Year	Investment	d_K^{MACRS}	BV	R	COM_d	CF	NDCF	DCF	CDCF	NDCCF
0	1.46		29.28				-1.46	-1.46	-1.46	-1.46
1	35.13		29.28				-35.13	-33.46	-34.92	-36.60
2		5.86	23.42	90.16	80.27	8.47	8.47	7.69	-27.24	-28.12
3		9.37	14.05	90.16	80.27	9.70	9.70	8.38	-18.85	-18.42
4		5.62	8.43	90.16	80.27	8.39	8.39	6.90	-11.95	-10.02
5		3.37	5.06	90.16	80.27	7.60	7.60	5.96	-5.99	-2.42
6		3.37	1.70	90.16	80.27	7.60	7.60	5.67	-0.32	5.18
7		1.70	-	90.16	80.27	7.02	7.02	4.99	4.67	12.20
8			-	90.16	80.27	6.43	6.43	4.35	9.02	18.63
9			-	90.16	80.27	6.43	6.43	4.14	13.16	25.05
10			-	90.16	80.27	6.43	6.43	3.94	17.11	31.48
11			-	90.16	80.27	6.43	6.43	3.76	20.86	37.90
12			-	90.16	80.27	6.43	6.43	3.58	24.44	44.33
13			-	90.16	80.27	7.38	14.70	7.79	32.23	59.02

d_K^{MACRS} = Modified accelerated cost recovery system depreciation method, BV = Book values, R = Revenue, COM = Cost of manufacturing, CF = Cash flows, NDCF = Non-discounted cash flow, DCF = Discounted cash flow, CDCF = Cumulative discounted cash flow, NDCCF = Non-discounted cumulative cash flow.

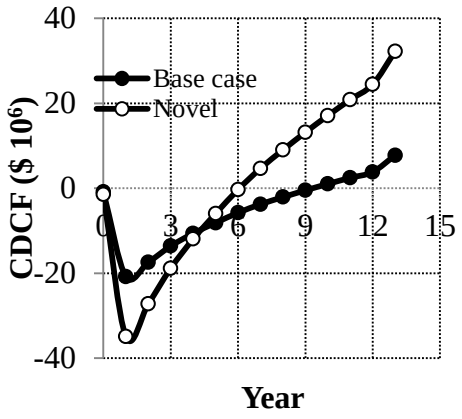

Table 5-12. Discounted profitability criterion of the base case and novel plants.

	Base Case	Novel
Net Present Value (millions)	7.76	32.23
Discounted Cash Flow Rate of Return	11.17%	19.20%
Discounted Payback Period (years)	5.8	3.8

Fig. 5-6. Comparison of the cumulative discounted cash flow diagram of the base case and novel biodiesel production plants.

Tedious calculations can be avoided by using CAPCOST software to generate Monte Carlo simulation. Table 5-9 presents the uncertainties of some of the key parameters over the plant life. Fig. 5-7 presents the cumulative probability distributions obtained 1000-point Monte Carlo simulations for the values of NPV, DCFROR, and DPBP values produced using CAPCOST software based on the uncertainties of parameters shown in Table 5-9. The results indicate that the novel biodiesel is about 20 percent more likely profitable compared to the base case biodiesel production plant. The lowest values of NPV for the base case and novel plants are -$68.8 and -$58.9 million, respectively, while the highest values of NPV for the base case and novel plants are $78.3 and $96.5 million, respectively.

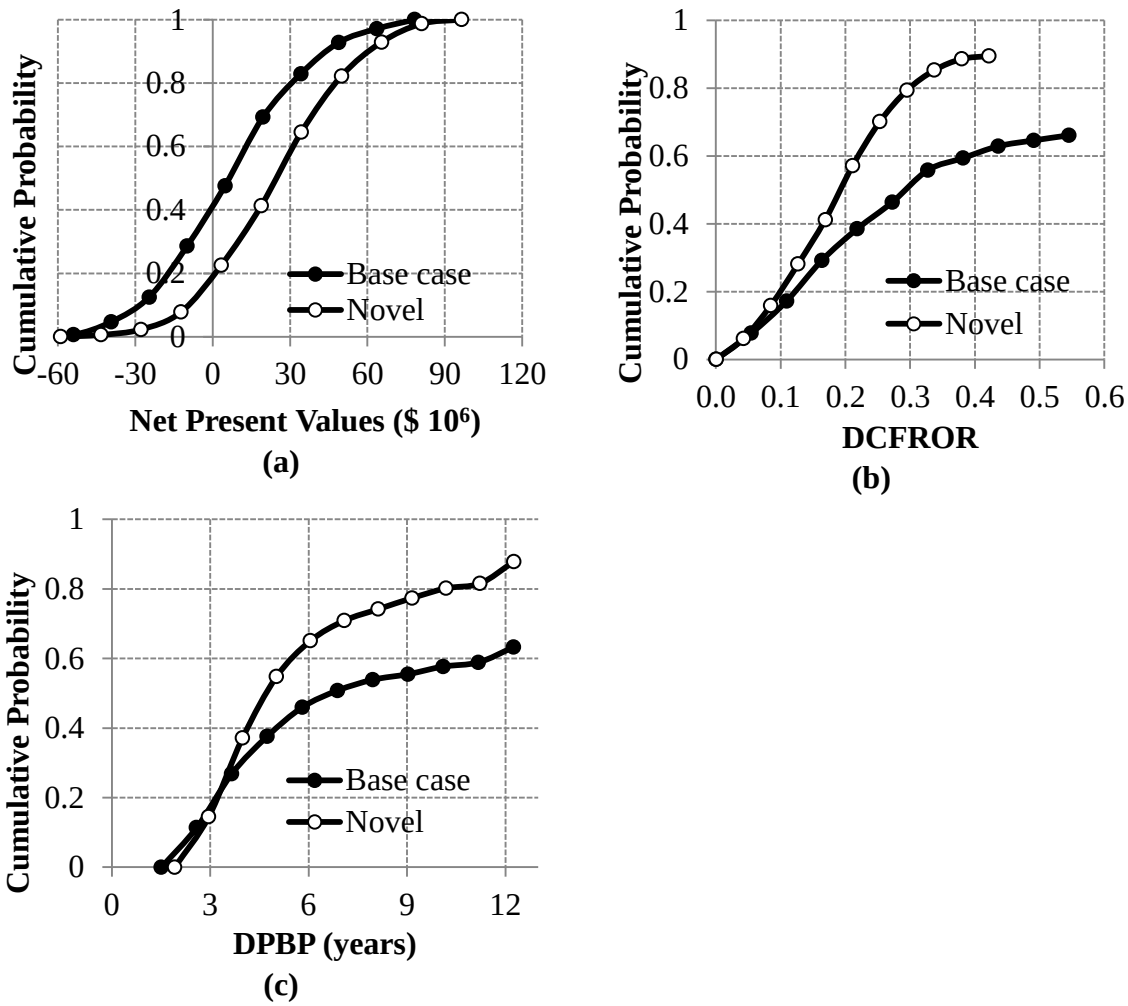

Fig. 5-7. 1000-point Monte Carlo simulation on; (a) net present values (NPV), (b) discounted cash flow rate of return (DCFROR), (c) discounted payback period (DPBP).

5.7. Conclusions

This study shows that addition of glycerol carbonate production not only results in a more environmentally friendly process as it consumes renewable feedstock of carbon dioxide but it is also an economical process as it converts two by-products into a value-added bioproduct. Using deterministic model prediction, the net present value of the novel biodiesel production plant is $24.47 million higher than the base case biodiesel

plant at the end of 12-year project. Also, stochastic model has predicted that addition of glycerol carbonate production may increase the probability of getting positive net present value by about 20% for the novel biodiesel plant.

Nomenclature

a	Estimate of the lowest value
b	Most likely value
BV	Book values
c	Estimates of the highest value
$C^{o}_{Bm,i}$	Bare module cost for equipment at base conditions
C_{GR}	Grassroots cost
$CDCF$	Cumulative discounted cash flow
$CEPCI$	Chemical engineering plant cost index
CF	Cash flows
COM	Cost of manufacturing
d_k^{MACRS}	Modified accelerated cost recovery system depreciation method
DCF	Discounted cash flow
$DCFROR$	Discounted cash flow rate of return
$DPDP$	Discounted payback period
$FAME$	Fatty acid methyl ester
FCI	Fix capital investment
L	Land
$MACRS$	Modified accelerated cost recovery system
N_{np}	Summation of number of equipments
NPV	Net present value
N_{OL}	Number of employee
P	Number of processing steps
$P(x)$	Random number

PBP	Payback Period
ROR	Rate of return
S	Salvage
x	Parameters such as R, COM, and FCI
WC	Working capital

References

1. Biodiesel Organization: http://www.biodiesel.org. Accessed on April 3, 2012.
2. Urbanchuk, J.M. 2011. Economic impact of removing the biodiesel tax credit for 2010 and implementation of RFS2 targets through 2015. Cardno Entrix. www.cardnoentrix.com.
3. Xu, Y., Isom, L., Hanna, M.A. 2010. Adding value to carbon dioxide from ethanol fermentations. Bioresource Technol. 101, 3311-3319.
4. Iowa State University: http://www.card.iastate.edu. Accesses on Sep. 15, 2010.
5. Zheng, Y., Chen, X., Shen, Y. 2008. Commodity chemicals derived from glycerol, an important biorefinery feedstock. Chem. Rev. 108, 5253-5277.
6. Diaz-Alvarez, A.E., Francos, J., Lastra-Barreira, B., et al. 2011. Glycerol and derived solvents: new sustainable reaction media for organic synthesis. Chem. Commun. 47, 6208-6227.
7. Olga, G-P.M., Rosas, J.M., Bedia, J., et al. 2009. Recent inventions in glycerol transformations and processing. Recent Pat. Chem. Eng. 2, 11-21.
8. Pagliaro, M., Ciriminna, R., Kimura, H., et al. 2007. From glycerol to value-added products. Angew. Chem. Int. Ed. 46, 4434-4440.
9. Hammond, C., Lopez-Sanchez, J.A., Rahim, M.H., et al. 2011. Synthesis of glycerol carbonate from glycerol and urea with gold-based catalysts. Dalton Trans. 40, 3927-3937.
10. Bozell, J.J., Petersen, G.R. 2010. Technology development for the production of biobased products from biorefinery carbohydrates – the US Department of Energy's "Top 10" revisited. Green Chem. 12, 539-554
11. Zhou, C-H., Deltramini, J.N., Fan, Y-X. 2008. Chemoselective catalytic conversion of glycerol as a biorenewable source to valuable commodity chemicals. Chem. Soc. Rev. 37, 527-549.

12. Chun-Hui, Z., Jorge, N.B., Yong-Xian, F., et al. 2008. Chemoselective catalytic conversion of glycerol as a biorenewable source to valuable commodity chemicals. Chem. Soc. Rev. 37, 527-549.

13. Lee, J-S., Saka, S. 2010. Biodiesel production by heterogeneous catalyst and supercritical technologies. Bioresour. Technol. 101, 7191-7200

14. Zhang, Y., Dubé, M.A., McLean, D.D., et al. 2003. Biodiesel production from waste cooking oil: 2. Economic assessment and sensitivity analysis. Bioresour. Technol. 90, 229-240.

15. Rajabathar, J., Ming, K.W. 2009. Review of recent developments in solid acid, base, and enzyme catalysts (heterogeneous) for biodiesel production via transesterification. Ind. Eng. Chem. Res. 48, 6162-6172.

16. Yan, S., Dimaggio, C., Mohan, S., et al. 2010. Advancements in heterogeneous catalysis for biodiesel synthesis. Top. Catal. 53, 721-736.

17. Zabeti, M., Wan Daud, W.M.A., Aroua, M.K. 2009. Activity of solid catalysts for biodiesel production: A review. Fuel Process Technol 90, 770-777.

18. Di Serio, M., Tesser, R., Penqmei, L., et al. 2008. Heterogeneous catalysts for biodiesel production. Energy Fuels 22, 207-217.

19. Sharma, Y.C., Singh, B., Korstad, J. 2010. Advancements in solid acid catalysts for ecofriendly and economically viable synthesis of biodiesel. Biofuel Bioprod. Biorefining 5, 69-92.

20. Yan, S., Kim, M., Salley, S.O., et al. 2009. Oil transesterification over calcium oxides modified with lanthanum. Appl Catal A Gen 360, 163-170.

21. Yan, S., Kim, M., Mohan, S., et al. 2010. Effects of preparative parameters on the structure and performance of Ca-La metal oxide catalysts for oil transesterification. Appl Catal A Gen 373, 104-111.

22. Dibenedetto, A., Angelini, A., Aresta, M. 2011. Converting wastes into added value products: from glycerol to glycerol carbonate, glycidol and epichlorohydrin using environmentally friendly synthetic routes. Tetrahedron 67, 1308-1313.

23. Aresta, M., Dibenedetto, A., Nocito, F., et al. 2006. A study on the carboxylation of glycerol to glycerol carbonate with carbon dioxide: The role of the catalyst, solvent and reaction conditions. J. Mol. Cat. A: Chemical 257, 149-153.

24. Vieville, C., Yoo, J.W., Pelet, S., et al. 1998. Synthesis of glycerol carbonate by direct carbonatation of glycerol in supercritical CO_2 in the presence of zeolites and ion exchange resins. Catal. Lett. 56, 245-247.

25. George, J., Patel, Y., Pillai, S., et al. 2009. Methanol assisted selective formation of 1,2-glycerol carbonate from glycerol and carbon dioxide using ^{n}Bu2SnO as a catalyst. J. Mol. Catal. A Chem. 304, 1-7.

26. Nguyen, N., Demirel, Y., 2011. A novel biodiesel and glycerol carbonate production plant. Int. J. Chem. Reactor Eng. 9, A108.

27. Demirel, Y. 2006. Retrofit of distillation columns using thermodynamic analysis. Sep. Sci. Technol. 41, 791-817.

28. Nguyen, N., Demirel, Y. 2010. Retrofit of distillation columns in biodiesel production plants. Energy 35, 1625-1632.

29. Nguyen, N., Demirel, Y. 2011. Using thermally coupled reactive distillation columns in biodiesel production. Energy 36, 4838-4847.

30. Turton, R., Bailie, R.C., Whiting, W.B. 2008. Analysis, synthesis, and design of chemical processes, third ed. Prentice Hall, Massachusetts.

31. O'Rourke, M., Marshall, R., Lozowski, D., et al., www.che.com. Accessed on April 12, 2011.

32. Seider, W.D, Seader, J.D., Lewin, D.R. 2009. Product and process design principles, third ed. John Wiley & Sons, Inc., New Jersey.

33. Geiver, L. 2011. Biodiesel RIN prices reach new highs, could be headed higher. Biodiesel Magazine. www.biodieselmagazine.com.

34. Voegele, E. 2011. Legislation would alter biodiesel tax credit. Biodiesel Magazine. www.biodieselmagazine.com.

35. Rose, L.M. 1976. Engineering investment decisions planning under uncertainty, Elsevier Scientific Publishing Company, Amsterdam.

CHAPTER 6

Biodiesel-Glycerol Carbonate Production by Glycerolysis

6.1. Introduction

Biodiesel is renewable, nontoxic, biodegradable, and essentially free of sulfur and aromatics, hence may be one of the most suitable candidates for future biofuel. Besides, U.S. Department of Energy life cycle analysis on biodiesel shows that biodiesel produces 78.5% less net carbon dioxide emissions compared to petroleum diesel [1]. In 2011, the United States produces approximately 1.1 billion gallons of biodiesel annually and the volume of production is expected to increase to 1.9 billion gallons in 2015 [2]. Major drawbacks of biodiesel production using vegetable oil are the cost of manufacturing and the high cost of oil since it competes with food. Currently, biodiesel production plants depend on government subsidies in order to keep their plants in operation [2]. Thus, seeking for a more economic biodiesel production process to reduce the dependency of government subsidies and promote expansion of biodiesel industry is desirable.

Previously, a conventional biodiesel production plant was retrofitted using thermodynamic analysis, which produces column grand composite curves and exergy loss profiles to assess an existing operation and suggest retrofits [3]. The retrofit design operates with less thermodynamic imperfections and hence requires less energy. With a suitable reaction rate, type of catalyst, relative volatilities of the components, and the reaction and separation temperature range, reaction and separation can be combined into a reactive distillation (RD) [4-6]. RD reduces operational and equipment costs by decreasing waste energy and overcoming thermodynamic and chemical equilibrium

limitations. Further reduction of energy and equipment cost of the biodiesel production plant is possible by using thermally coupled distillation sequences as they allow interconnecting vapor and liquid flows between the two columns to eliminate the reboiler or condenser or both [7].

About 1 kg of glycerol is formed for every 10 kg of biodiesel produced [8]. The production cost of biodiesel increases by $0.08/gal for every $0.10/lb reduction in glycerol selling price [9,10]. As a result, economical utilization schemes of bioglycerol can lead to a more economical biodiesel production plant. A recent study suggests that addition of glycerol carbonate production by direct carboxylation route may be more economical than the conventional biodiesel production plant [11]. However, recently, Li and Wang (2011) [12] has suggested that direct carboxylation of glycerol and CO_2 is thermodynamically limited and the yield is very low (less than 35%) [13]. Low yield requires high energy for products separation and reactants recovery leading to high cost of manufacturing. Thus, in this study, synthesis of glycerol carbonate by glycerolysis route is developed and economics of the biodiesel-glycerol carbonate production by direct carboxylation and glycerolysis plants are compared. Economic analysis based on deterministic and stochastic models are used to compare the two plants to determine the most feasible process.

6.2. Methods and Approaches

6.2.1. Simulation

Aspen Plus simulation package is used to design, develop, and simulate a biodiesel-glycerol carbonate production plant by using glycerolysis route. This novel plant contains the biodiesel production section and the glycerol carbonate production section. Economic analysis based on the deterministic and stochastic model is used to compare cash flow of this plant to the biodiesel-glycerol carbonate plant by direct carboxylation route developed in the Chapter 5 or reference [11].

6.2.2. Glycerolysis Reaction

Glycerolysis with urea (using urea as CO_2 donor) may be described by the following reactions [14]

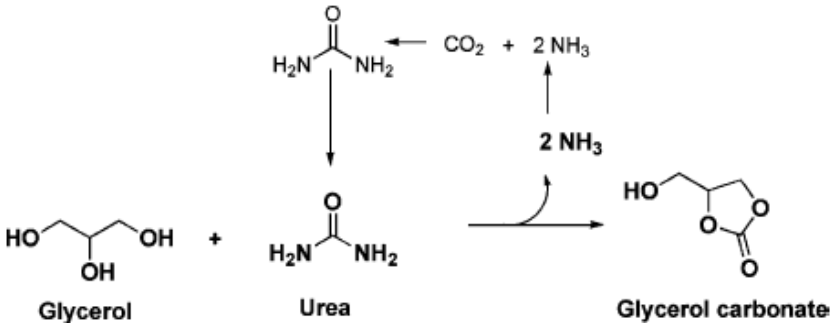

Over 89% of glycerol carbonate yield with 98.6% selectivity can be achieved when the reaction proceeds at 140°C, 3 kPa, glycerol/urea mass ratio of 3.07, and using 1 wt.% of La_2O_3-600 as a catalyst in 1 hour. La_2O_3-600 shows high stability, even after six consecutive runs, GC yield is still over 84% with over 97% selectivity can be obtained

[14]. Ammonia (NH_3) is released when urea reacts with glycerol. Urea can be recovered by reacting NH_3 with CO_2 under high pressure and temperature [15].

6.3. Direct Carboxylation Plant

The direct carboxylation plant contains two Sections. Section 1 produces biodiesel and crude bioglycerol while Section 2 produces bioglycerol carbonate and water. Overall, Section 1 consumes 738.89 kg/hr of methanol and 6419.51 kg/hr of oil to produce 6316.33 kg/hr of FAME and 651.98 kg/hr of glycerol. The glycerol carbonate production section (Section 2) utilizes 273.74 kg/hr of carbon dioxide and the byproduct of the Section 1 to produce 674.59 kg/hr of glycerol carbonate and 224.96 kg/hr of water. Process details are very similar to Fig. 5-3 in Chapter 5.

6.4. Glycerolysis Plant

The glycerolysis plant contains two sections as shown in Fig. 6-1a. Section 1 (Fig. 6-1b) produces biodiesel and bioglycerol with methanol, while Section 2 (Fig. 6-1c) produces bioglycerol carbonate and water. Table F-1 provides the input summary of the glycerolysis plant. Section 1 utilizes methanol and triglyceride to produce fatty acid methyl ester (FAME) and glycerol using calcined eggshell contains mostly CaO (~99%) as a catalyst [16]. Utilization of catalyst derived from waste materials reduces the overall cost of manufacturing as well as beneficial to the environment [17]. Recycled and fresh methanol and oil are mixed in mixer M101 before they are fed into the reactor R101. 98% conversion of triglyceride is achieved in 3 hours when the reaction proceed at 65°C, 1 bar, methanol/oil molar ratio of 9:1 and 3 wt% of the catalyst [18]. Table F-2 presents

the results summary of reactor R101. The reactor effluent, stream S2, containing mixture of catalyst, products, and unreacted reactants, is sent to separator SEP101 to recover catalyst, which will be discarded after 13 cycles (approximately 36 hours in operation) [18].

The outlet of separator SEP101, stream S3, enters decanter DEC101 to remove glycerol by phase separation. The top layer, stream S4, of the decanter DEC101 is heated to 76.33^{o}C by stream S6 in HX101 to reduce temperature gradient before it is sent to the flash drum, F101. Drum F101 operates at 100.35^{o}C and 0.5 bar. Table F-3 shows the summary of the flash drum. The distillate, containing mostly methanol, is recycled while the bottom, containing 6487.70 kg/hr of FAME, is the primary product. The stream properties of the biodiesel plant shown in Fig. 6-1b are summarized in Table 6-1, which is obtained by using Aspen Plus V7.3 with the thermodynamic model of UNIF-DMD. Overall, Section 1 of the glycerolysis plant uses 741.18 kg/hr of methanol and 6419.51 kg/hr of oil to produce 6487.70 kg/hr of FAME and 1653.25 kg/hr of methanol and glycerol as summarized in Table 6-1.

In Section 2, stream BY-PROD is sent to flash drum F201 to recover methanol. Using design specification block, the flow rate of methanol in the distillate of flash drum, F201, is set to 30.40 kmol/hr by varying the temperature (Table F-4). Flash drum F201 operates at 99.87^{o}C and 0.2 bar. The summary of drum F201 is presented in Table F-5. The distillate, stream R5, is recycled to Section 1, while the bottom, stream S1, mixes with recycled glycerol, stream R4, in Mixer M201. Stream S2, containing mostly glycerol, is heated to reaction conditions before entering reactor R201. Fresh urea, stream UREA, is also sent to reactor R201. 85% yield and 100% selectivity of glycerol

carbonate are assumed when the reaction occurred at 140°C, 3 KPa, glycerol/urea mass ratio of 1.79, and using 1 wt.% of La_2O_3-600 as a catalyst in 1 hour [14]. Table F-6 shows the summary of reactor R201. Separator SEP201 is used to recover the lanthanum oxide from the reactor outlet. After six consecutive runs, lanthanum oxide will be discarded as waste [14]. The outlet of separator, stream S5, is cooled to 60°C before sending to flash drum F202 to separate NH_3. Flash drum F202 operates at 60°C and 0.5 bar. Stream S12, containing mostly ammonia, is cooled to 25°C may be treated as a secondary by-product. Table F-7 provides the results summary of drum F202.

Using additional unit for urea production from NH_3 and CO_2 is not feasible because of the low production capacity in the plant. The bottom product, stream S7, is heated to 140°C in heater H202 before sending to stage 5 of distillation column T201 to minimize exergy losses caused by the temperature gradient [3,7,19,20]. Distillation column T201 operates with 10 equilibrium stages with a partial-vapor-liquid condenser and a kettle reboiler. Three design specifications are used to control the molar flow rates of glycerol, urea and glycerol carbonate in the distillate stream, stream R3, of the distillation column, T201. The first design specification sets the molar flow rate of glycerol in stream R3 to 0.5 kmol/hr by varying the bottom flow rate. The second design specification sets the flow rate of urea to 0.065 kmol/hr in stream R3 by varying the distillate vapor fraction. The third design specification sets the flow rate of glycerol carbonate to 0.16 kmol/hr in stream R3 by varying the reflux ratio. Column T201 results summary, including the three design specifications, is shown in Table F-8. The distillate stream, R3, containing mostly glycerol is recycled. The bottom stream contains 92.93

wt.% of 818.52 kg/hr of glycerol carbonate as the secondary product as shown in Table 6-2.

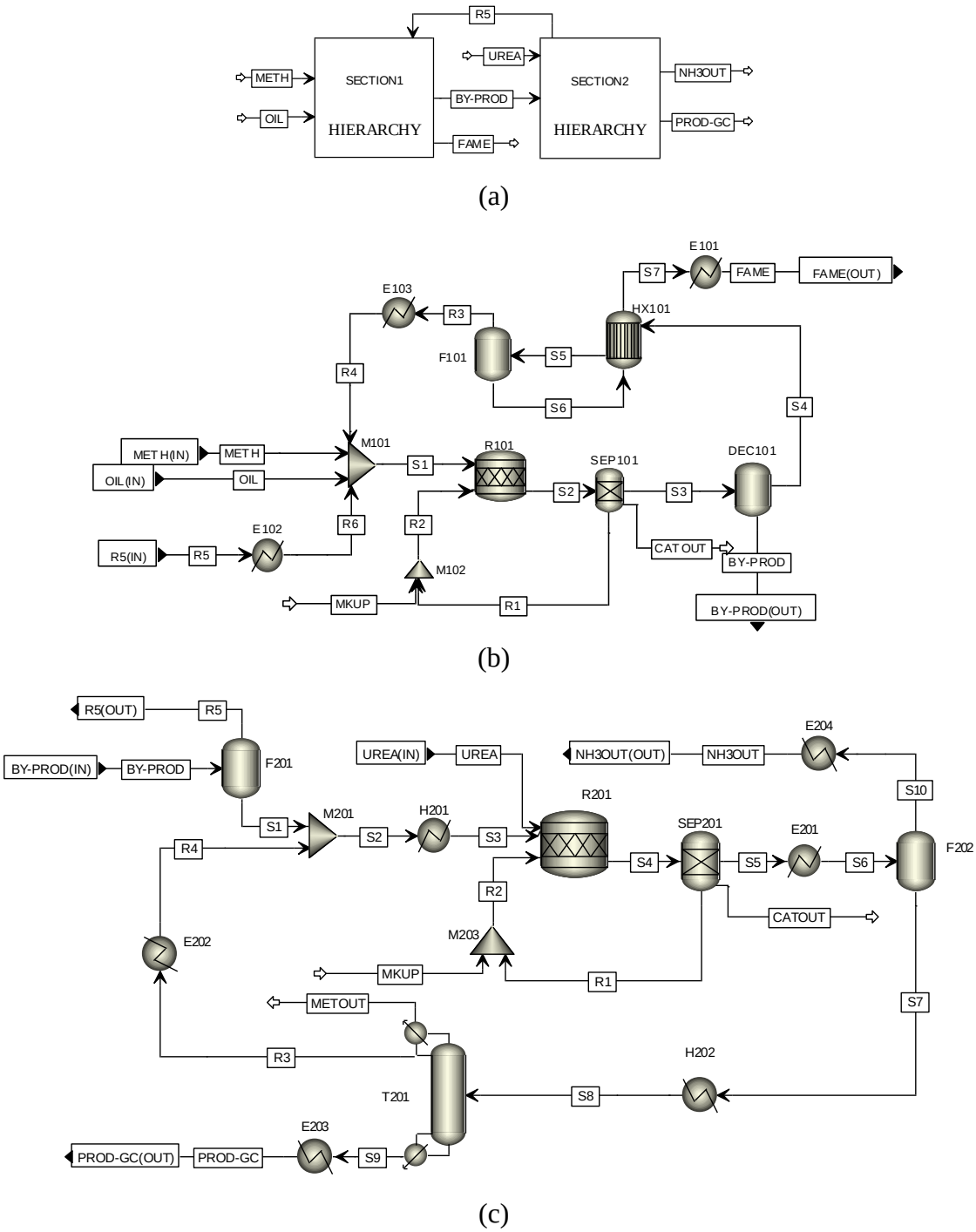

Fig. 6-1. (a) Hierarchy of the novel biodiesel production plant by glycerolysis route; (b) process flow diagram of Section 1 for biodiesel and bioglycerol production plant; (c) process flow diagram of Section 2 for bioglycerol carbonate production plant [11].

Table 6-1. Streams properties of Section 1 of the novel biodiesel production plant by glycerolysis shown in Fig. 6-1b.

	BY-PROD	FAME	METH	OIL	R3	R4	R5	R6	S1	S3	S4	S5	S6
Mass Flow kg/hr													
METHANOL	9.95E+02	3.75E+01	7.41E+02	0.00E+00	3.78E+02	3.78E+02	9.74E+02	9.74E+02	2.09E+03	1.41E+03	4.15E+02	4.15E+02	3.75E+01
OIL	1.67E-06	1.28E+02	0.00E+00	6.42E+03	3.41E-01	3.41E-01	1.67E-06	1.67E-06	6.42E+03	1.28E+02	1.28E+02	1.28E+02	1.28E+02
FAME	3.79E+00	6.32E+03	0.00E+00	0.00E+00	2.05E-01	2.05E-01	3.45E+00	3.45E+00	3.66E+00	6.32E+03	6.32E+03	6.32E+03	6.32E+03
GLYCEROL	6.55E+02	2.42E+00	0.00E+00	0.00E+00	1.67E-01	1.67E-01	2.72E+00	2.72E+00	2.89E+00	6.57E+02	2.59E+00	2.59E+00	2.42E+00
Mass Frac													
METHANOL	0.6017	0.0058	1.0000	0.0000	0.9981	0.9981	0.9937	0.9937	0.2457	0.1655	0.0605	0.0605	0.0058
OIL	0.0000	0.0197	0.0000	1.0000	0.0009	0.0009	0.0000	0.0000	0.7536	0.0151	0.0187	0.0187	0.0197
FAME	0.0023	0.9741	0.0000	0.0000	0.0005	0.0005	0.0035	0.0035	0.0004	0.7423	0.9204	0.9204	0.9741
GLYCEROL	0.3960	0.0004	0.0000	0.0000	0.0004	0.0004	0.0028	0.0028	0.0003	0.0771	0.0004	0.0004	0.0004
Total Flow kg/hr	1653.25	6487.70	741.18	6419.51	378.49	378.4899	980.26	980.26	8519.43	8519.43	6866.18	6866.18	6487.70
Temperature C	65.00	25.00	25.00	25.00	100.43	25	99.87	25.00	22.36	65.00	65.00	76.33	100.43
Pressure bar	1	1	1	1	1	1	0.2	1	1	1	1	1	1

Table 6-2. Streams properties of Section 2 of the novel biodiesel production plant by glycerolysis shown in Fig. 6-1c.

	METOUT	PROD-GC	R3	R4	R5	S1	S2	S3	S5	S6	S7	S8	S9	S10	UREA
Mass Flow kg/hr															
METHANOL	6.49E+00	2.03E-19	2.71E-02	2.71E-02	9.74E+02	2.07E+01	2.07E+01	2.07E+01	2.07E+01	2.07E+01	6.51E+00	6.51E+00	2.03E-19	1.42E+01	0.00E+00
GLYCEROL	7.41E-01	5.79E+01	4.60E+01	4.60E+01	2.72E+00	6.52E+02	6.98E+02	6.98E+02	1.05E+02	1.05E+02	1.05E+02	1.05E+02	5.79E+01	2.47E-03	0.00E+00
GC	1.47E-01	7.61E+02	1.89E+01	1.89E+01	0.00E+00	0.00E+00	1.89E+01	1.89E+01	7.80E+02	7.80E+02	7.80E+02	7.80E+02	7.61E+02	8.94E-03	0.00E+00
UREA	2.79E+01	5.49E-08	1.44E+01	1.44E+01	0.00E+00	0.00E+00	1.44E+01	1.44E+01	4.26E+01	4.26E+01	4.23E+01	4.23E+01	5.49E-08	3.02E-01	4.15E+02
AMMONIA	6.20E+00	4.58E-23	2.74E-03	2.74E-03	0.00E+00	0.00E+00	2.74E-03	2.74E-03	2.19E+02	2.19E+02	6.21E+00	6.21E+00	4.58E-23	2.13E+02	0.00E+00
Mass Frac															
METHANOL	0.1552	0.0000	0.0003	0.0003	0.9937	0.0308	0.0276	0.0276	0.0178	0.0178	0.0069	0.0069	0.0000	0.0625	0.0000
GLYCEROL	0.0177	0.0707	0.5800	0.5800	0.0028	0.9687	0.9277	0.9277	0.0897	0.0897	0.1114	0.1114	0.0707	0.0000	0.0000
GC	0.0035	0.9293	0.2380	0.2380	0.0000	0.0000	0.0251	0.0251	0.6678	0.6678	0.8297	0.8297	0.9293	0.0000	0.0000
UREA	0.6671	0.0000	0.1815	0.1815	0.0000	0.0000	0.0192	0.0192	0.0365	0.0365	0.0450	0.0450	0.0000	0.0013	1.0000
AMMONIA	0.1485	0.0000	0.0000	0.0000	0.0000	0.0000	0.0000	0.0000	0.1880	0.1880	0.0066	0.0066	0.0000	0.9361	0.0000
Total Flow kg/hr	41.78	818.52	79.39	79.39	980.26	672.99	752.39	752.39	1167.45	1167.45	939.69	939.69	818.52	227.77	415.06
Temperature C	95.61	25.00	95.61	25.00	99.87	99.87	94.40	140.00	140.00	60.00	60.00	140.00	182.51	60.00	178.00
Pressure bar	0	1	0	1	0.2	0.2	0.2	0.03	0.03	1	0.5	1	0	0.5	1

6.5. Economic analysis

6.5.1. Deterministic model

The bare module costs of major equipment $C^{o}_{Bm,i}$ are estimated using the CAPCOST 2008 program and the chemical engineering plant cost index (CEPCI) of 580 for the year 2011 [21]. The FCI of the direct carboxylation plant is $29,276,352 and the cost of the glycerolysis plant is $27,000,160 as shown in Table 6-3. This cost estimation accuracy of the preliminary design ranges from +25% to -15% of the actual cost. Land (L) and working capital (WC) are assumed equal to 5% and 20% of FCI, respectively. Table F-9 shows the cost of utilities for all of the equipment. The reported costs of low and medium pressure steam, cooling water, and electricity [22] are updated using the 2011 CEPCI of 580. Number of employee (N_{OL}) is estimated using equation from reference [23].

The total cost of labor summarized in Table 6-3 is calculated based on 8400 hr/year of the plant operation. The cost of waste disposal is $0.37/kg [22]. The price of oil and methanol are $3.00/gal and $0.75/gal, respectively [24]. The current selling price of products is presented in Table 3. With the inclusion of tax incentive and renewable index number, biodiesel producers can get up to $2.80/gallon in addition to the market price of biodiesel [25], making the selling price of biodiesel approximately equal to $4.50/gallon. Salvage (S) value is 5% of FCI [23]. The useful life of the plants, taxation rate (t), years of depreciation and interest rate are also presented in Table 6-3. In the deterministic model, based on the most likely economic data considered in Table 6-3, discounted cash flows (DCF) and cumulative discounted cash flows (CDCFs) are estimated. The plot of DCFs versus years of operation yields the feasibility criteria of net

present value (NPV), payback period (PBP), and rate of return (ROR). The cash flow diagrams of the two plants are generated by inserting the values of Table 6-3 into CAPCOST 2008 as shown in Tables 6-4 and 6-5. Table F-10 shows the deterministic model calculation details for both plants.

Table 6-3. Major cost factors of the biodiesel production plants [11].

	Direct Carboxylation	Glycerolysis
Fixed capital investment (FCI), $	29,276,352.00	27,000,160.00
Land (L), $ (5% of FCI)	1,463,817.60	1,350,008.00
Working capital (WC), $ (20% of FCI)	5,855,270.40	5,400,032.00
Labor, $/hr	30	30
Operating labor	16	16
Cost of labor (COL), $	4,032,000.00	4,032,000.00
Cost of electricity, $/kW-hr	0.0666	0.0666
Cost of cooling water, $/ton	0.0202	0.0202
Cost of 1 bar steam, $/ton	2.4	2.4
Cost of 22 bar steam, $/ton	-	14.7
Cost of 35 bar steam, $/ton	16.6	-
Cost of 190 bar steam, $/ton	-	23.3
Cost of utilities (CUT), $	963,209.48	332,348.74
Waste treatment, $/kg	0.37	0.37
Waste treatment (S), $	987,610.17	129,846.19
Cost of methanol, $/gal	0.75	0.75
Cost of oil, $/gal	3.00	3.00
Cost of CO_2, $/kg	0.045	0.045
Cost of urea, $/kg	-	0.27
Cost of CaO, $/kg	0.10	0.10
Cost of n-Bu_2SnO, $/kg	17.15	-
Cost of LA_2O_3, $/kg	-	12.00
Total cost of raw materials, $	49,396,717.77	49,590,018.45
Cost of manufacturing (COM), $	79,434,573.35	77,431,611.26
Price of FAME, $/gal	4.5	4.5
Price of GC, $/kg	2.4	2.4
Price of NH_3, $/kg	-	0.12
Revenue (R), $/year	88,955,720.28	92,142,084.60
Salvage value (S), $ (5% of FCI)	1,463,817.60	1,350,008.00
Taxation rate (t), %	35	35
Years of operation (n)	12	12
Years of depreciation (k)	5	5
Operational time, hr/year	8400	8400
Interest rate (i), %	5	5

Table 6-4. CAPCOST 2008 input summary for the direct carboxylation plant.

Economic Options

Cost of Land	$	1,463,818
Taxation Rate		35%
Annual Interest Rate		5%
Salvage Value		1463818
Working Capital	$	5,855,270
FCI_L	$	29,276,352
Total Module Factor		1.18
Grass Roots Factor		0.50

Economic Information Calculated From Given Information

Revenue From Sales	$	88,955,720
C_{RM} (Raw Materials Costs)	$	49,396,718
C_{UT} (Cost of Utilities)	$	963,209
C_{WT} (Waste Treatment Costs)	$	987,610
C_{OL} (Cost of Operating Labor)	$	4,032,000

Factors Used in Calculation of Cost of Manufacturing (COM_d)

Comd = 0.18*FCIL + 2.73*COL + 1.23*(CUT + CWT + CRM)

Multiplying factor for FCIL		0.18
Multiplying factor for C_{OL}		2.73
Facotrs for C_{UT}, C_{WT}, and C_{RM}		1.23
COM_d	$	79,434,574

Factors Used in Calculation of Working Capital

Working Capital = $A*C_{RM} + B*FCI_L + C*C_{OL}$

A	0.10
B	0.10
C	0.10

Project Life (Years after Startup)	12

Construction period	1

Table 6-5. CAPCOST 2008 input summary for the glycerolysis plant.

Economic Options

Cost of Land	$	1,350,008
Taxation Rate		35%
Annual Interest Rate		5%
Salvage Value		1350008
Working Capital	$	5,400,032
FCI_L	$	27,000,160
Total Module Factor		1.18
Grass Roots Factor		0.50

Economic Information Calculated From Given Information

Revenue From Sales	$	92,142,085
C_{RM} (Raw Materials Costs)	$	49,590,018
C_{UT} (Cost of Utilities)	$	332,349
C_{WT} (Waste Treatment Costs)	$	129,846
C_{OL} (Cost of Operating Labor)	$	4,032,000

Factors Used in Calculation of Cost of Manufacturing (COM_d)

Comd = 0.18*FCIL + 2.73*COL + 1.23*(CUT + CWT + CRM)

Multiplying factor for FCIL		0.18
Multiplying factor for C_{OL}		2.73
Facotrs for C_{UT}, C_{WT}, and C_{RM}		1.23
COM_d	$	77,431,611

Factors Used in Calculation of Working Capital

Working Capital = $A*C_{RM} + B*FCI_L + C*C_{OL}$

A	0.10
B	0.10
C	0.10

Project Life (Years after Startup)	12

Construction period	1

6.5.2. Stochastic model

In reality, parameters used to evaluate profitability are subject to change throughout the life of the chemical plant. Stochastic model incorporates Monte-Carlo simulation into economic analysis to quantify the uncertainty on the values of NPV, PBP, and ROR [23]. The uncertainties on the fixed capital investment, price of product, working capital, income tax rate, interest rate, raw material, and salvage values are considered for stochastic model economic comparison. The fluctuation of those parameters from the base value is described in Table 6-6.

Table 6-6. Uncertainties on some key parameters.

	Direct Carboxylation	**Glycerolysis**		
	Base Value (b)	Base Value (b)	Lower Limit (a)	Upper Limit (c)
Fixed capital investment, $	29,276,352	27,000,160	-15%	20%
Price of product, $	88,955,720	92,142,085	-10%	10%
Working capital, $	5,855,270	5,400,032	-10%	15%
Income tax rate, %	35%	35%	-5%	5%
Interest rate, %	5%	5%	-10%	20%
Raw material price, $	49,396,718	49,590,018	-10%	15%
Salvage value, $	1,463,818	1,350,008	-10%	10%

6.6. Results and discussions

Fig. 6-2 shows the discounted cash flow diagrams generated using the deterministic model based on the 5 year modified accelerated cost recovery system (MACRS) depreciation method. Table 6-7 presents the discounted profitability criteria of the two plants. The net present value of the glycerolysis plant is about $30.18 million higher than the direct carboxylation plant at the end of 12-year project. The discounted

payback period of the direct carboxylation and glycerolysis plants is 4.0 and 2.5 years, respectively, as shown in Table 6-7.

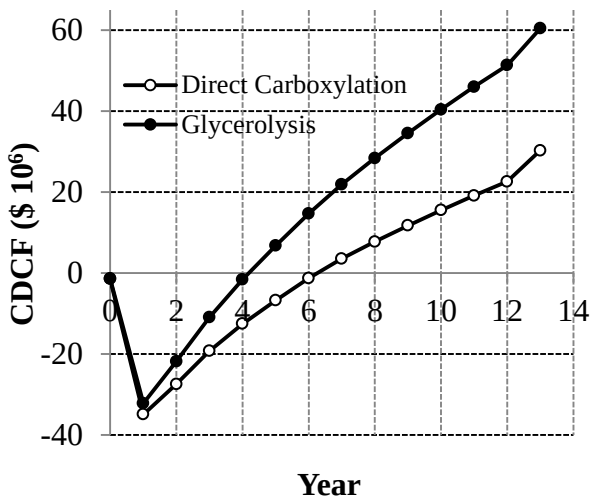

Fig. 6-2. Comparison of the cumulative discounted cash flow (CDCF) diagrams of the direct carboxylation and glycerolysis routes.

Table 6-7. Discounted profitability criteria.

	Direct Carboxylation	Glycerolysis
Net Present Value (millions)	30.24	60.42
Discounted Cash Flow Rate of Return	18.40%	31.56%
Discounted Payback Period (years)	4	2.5

CAPCOST software is used to generate Monte Carlo simulations. Fig. 6-3 presents the cumulative probability distributions obtained 1000-point Monte Carlo simulations for the values of NPV, discounted cash flow rate of return (DCFROR) and discounted payback period (DPBP) values produced using CAPCOST 2008 software based on the uncertainties of parameters shown in Table 6-6. Fig. 6-3a shows that there is about 17% chance (multiply cumulative probability by 100 to obtain percentage) that the direct carboxylation plant will not be profitable, while there is approximately 2% chance

that the glycerolysis plant will not be profitable. The glycerolysis plant is about 15% more likely to be profitable compared to the direct carboxylation plant. If the median probability of 50% is considered, the glycerolysis plant yields about $30.18 million higher NPV. The lowest values of NPV for the direct carboxylation and glycerolysis plants are -$59.5 and -$27.4 million, respectively, while the highest values of NPV for the direct carboxylation and glycerolysis plants are $88.2 and $121.3 million, respectively. From Fig. 6-3c, the direct carboxylation plant will have 38% chance while the glycerolysis plant will have 78% chance of getting DPBP after 4 years.

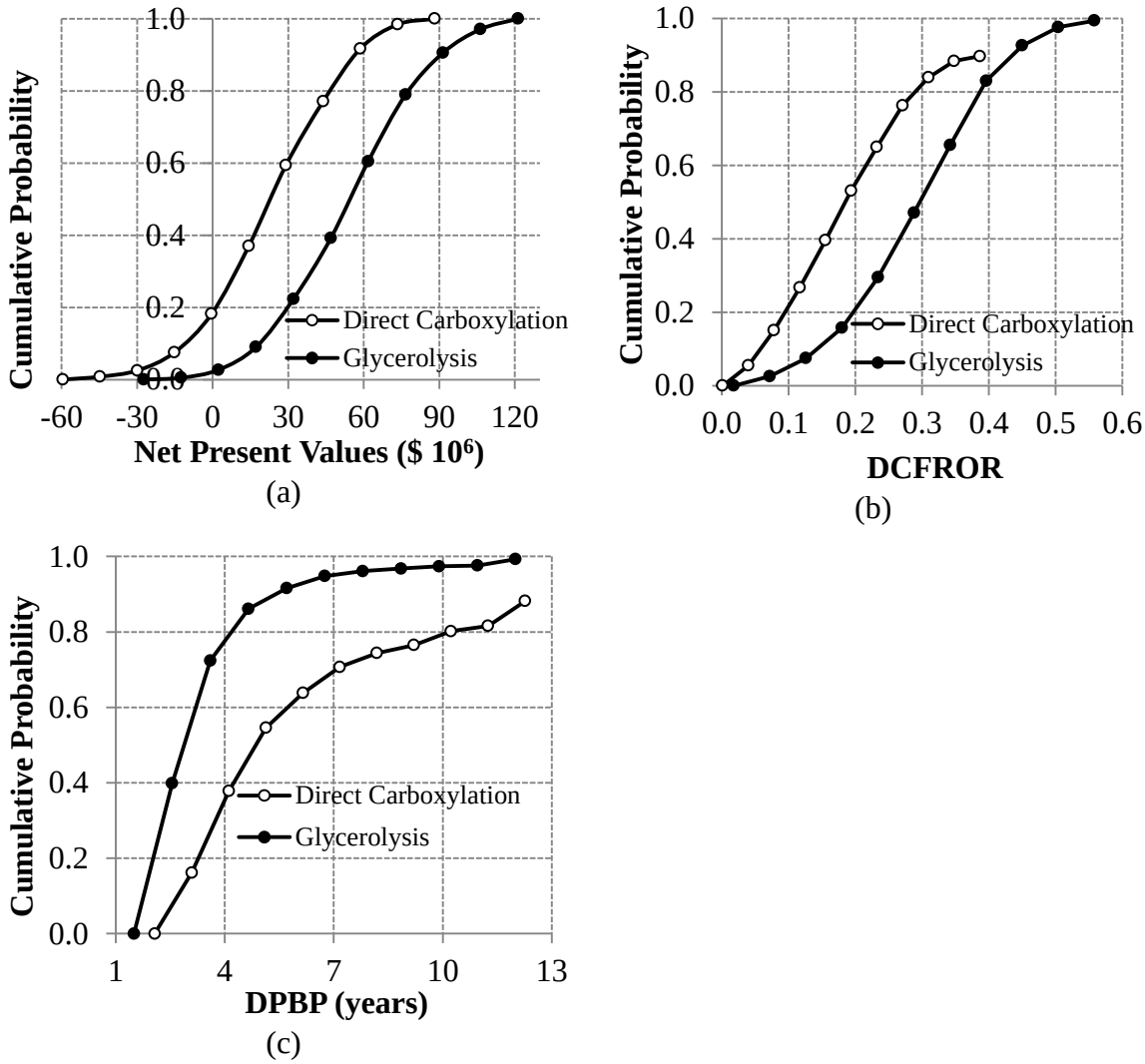

Fig. 6-3. 1000-point Monte Carlo simulation on; (a) net present values (NPV), (b) discounted cash flow rate of return (DCFROR), (c) discounted payback period (DPBP).

6.7. Conclusions

Production of glycerol carbonate using direct carboxylation route suffers low yield requires more complex separation units leading to high operating cost. In contrast, indirect uses of CO_2 by using urea as a CO_2 donor simplify the glycerol carbonate production process, hence, creating a more economical biodiesel-glycerol carbonate production process. Using deterministic model prediction, the net present value of the glycerolysis plant is $30.18 million higher than the direct carboxylation plant at the end

of 12-year project. Also, stochastic model has predicted that using glycerolysis route for glycerol carbonate production may increase the probability of getting positive net present value by about 15%.

References

1. Sheehan, J., Camobreco, V., Duffield, J., et al. 1998. Life cycle inventory of biodiesel and petroleum diesel for use in an urban bus. www.nrel.gov. Accessed on December 20, 2011.

2. Urbanchuk, J.M. 2011. Economic impact of removing the biodiesel tax credit for 2010 and implementation of RFS2 targets through 2015. Cardno Entrix. www.cardnoentrix.com.

3. Nguyen, N., Demirel, Y. 2010. Retrofit of distillation columns in biodiesel production plants. Energy 35, 1625-1632.

4. Dimian, A.C., Bildea C.S., Omota, F., et al. 2009. Innovative process for fatty acid esters by dual reactive distillation. Comput. Chem. Eng. 33, 743-750.

5. William, L., Cheng-Ching, Y. 2008. Reactive distillation design and control. New York: Wiley.

6. Nguyen, N., Demirel, Y. 2011. Reactive distillation column for esterification of lauric acid with methanol: Equilibrium vs. nonequilibrium approaches. AIChE Annual. Meeting. Conf. Proc. Nov 7-12, Salt Lake City, Utah.

7. Nguyen, N., Demirel, Y. 2011. Using thermally coupled reactive distillation columns in biodiesel production. Energy 36, 4838-4847.

8. Nguyen, N., Demirel, Y. 2010. Carboxylation of glycerol in a biodiesel plant. AIChE Annual. Meeting. Conf. Proc. Nov 7-12, Salt Lake City, Utah.

9. Behzadi, S., Farid, M.M. 2007. Review: Examining the use of different feedstock for the production of biodiesel. Asia-Pac. J. Chem. Eng. 2, 480-486.

10. Zheng, Y., Chen, X., Shen Y. 2008. Commodity chemicals derived from glycerol, an important biorefinery feedstock. Chem. Rev. 108, 5253-5277.

11. Nguyen, N., Demirel, Y. 2011. A novel biodiesel and glycerol carbonate production plant. Int. J. Chem. Reactor Eng. 9, A108.

12. Li, J., Wang, T. 2011. Chemical equilibrium of glycerol carbonate synthesis from glycerol. J. Chem. Thermodynamics 43, 731-736.

13. George, J., Patel, Y., Pillai, S., et al. 2009. Methanol assisted selective formation of 1,2-glycerol carbonate from glycerol and carbon dioxide using ^{n}Bu2SnO as a catalyst. J. Mol. Catal. A Chem. 304, 1-7.

14. Wang, L, Ma, Y., Wang, Y., et al. 2011. Efficient synthesis of glycerol carbonate from glycerol and urea with lanthanum oxide as a solid base catalyst. Catal. Commun. 12, 1459-1462.

15. Piotrowski, K., Piotrowski, J. 2003. Modeling of complex liquid-vapour equilibria in the urea synthesis process with the use of artificial neural network. Chem. Eng. Process. 42, 285-289.

16. Viriya-empikul, N., Krasae, P., Puttasawat, B. 2010. Waste shells of mollusk and egg as biodiesel production catalysts. Bioresour. Technol. 101, 3765-3767.

17. Chakraborty, R., Bepari, S., Banerjee, A. 2010. Transesterification of soybean oil catalyzed by fly ash and egg shell derived solid catalysts. Chem. Eng. J. 165, 798-805.

18. Wei, Z., Xu, C., Li, B. 2009. Application of waste eggshell as low-cost solid catalyst for biodiesel production. Bioresour. Technol. 100, 2883-2885.

19. Bandyopadhyay, S., Malik R.K., Shenoy, U.V. 1998. Temperature-enthalpy curve for energy targeting of distillation columns. Comput. Chem. Eng. 22, 1733-1744.

20. Demirel, Y. 2006. Retrofit of distillation columns using thermodynamic analysis. Sep. Sci. Technol. 41, 791-817.

21. O'Rourke, M., Marshall, R., Lozowski, D., et al. www.che.com. Accessed on April 12, 2011.

22. Seider, W.D., Seader, J.D., Lewin, D.R. 2009. Product and process design principles, third ed. John Wiley & Sons, Inc., New Jersey.

23. Turton, R., Bailie, R.C., Whiting, W.B. 2008. Analysis, synthesis, and design of chemical processes, third ed. Prentice Hall, Massachusetts.

24. Tremain, S. www.biodiesel.org. Accessed on April 15, 2011.

25. Geiver, L. 2011. Biodiesel RIN prices reach new highs, could be headed higher. Biodiesel Magazine. www.biodieselmagazine.com.

CHAPTER 7

Comments, Limitations, Conclusions and Recommendations

7.1. Comments

- Although the reactive distillation column in Chapters 3 and 4 is developed using the reaction rate of lauric acid, any free fatty acids with similar molecular weight can be used in this process. The column is developed with extra number of reactive stages to ensure the flexibility of using slightly higher carbon chain free fatty acids. Notice as the number carbon chain increases, the reaction rate will decreases due to steric hindrance [1], consequently, the number of reactive stages must increase to complete the reaction.

7.2. Limitations

- Table 1.1 in reference [2] provides over 70 industrial reactions that used reactive distillation column for either laboratory or commercial scale. Although reactive distillation has multiple benefits, its area of application is very restricted. Even through an intensive literature research, finding a suitable heterogeneous catalyst for transesterification of triglyceride that can be used for reactive distillation application has not been possible during this study.
- The maximum operating temperature for the reactive zone of the reactive distillation column in Chapter 3 and 4 is around 170°C, which may be above the smoke point of some oils. Thus, using reactive distillation column for oils with smoke point less than 170°C requires modifications of the column operating

conditions. Also notice that high degree of unsaturation may lead to thermal decomposition biodiesel at high temperature [3]. It is important to keep the reboiler of the reactive distillation column below the thermal decomposition temperature of the oil of interest to preserve quality of biodiesel.

- Processes developed in this study used feedstock containing either pure triglyceride or free fatty acid. Two processes can be combined for a feedstock containing mixture of triglyceride and free fatty acid.

7.3. Conclusions

Using thermodynamic analysis through column grand composite curves and exergy loss profiles generated by the Aspen Plus simulation to retrofit distillation column is very effective. The two distillation columns operate with less exergy losses leading to lower operating cost. Using nonequilibrium modeling allows users to develop processes that are more comparable to the actual processes. Thermally integrated distillation column configurations eliminate either the reboiler or condenser or both by allowing interconnecting vapor and liquid streams from one column to another result in reduction in energy consumption and equipment costs.

Converting the by-product, glycerol, into glycerol carbonate not only reduces the unit cost of biodiesel product but it is also an environmentally friendly process as it directly and indirectly consumes carbon dioxide.

7.4. Recommendations

- Instead of using mass, heat and interfacial area correlations from Aspen Plus library, users can use FORTRAN software as compiler and visual studio as linker to update those correlations to develop a more realistic process.
- Use ethanol instead of methanol since ethanol and biodiesel can be used together as fuel [4,5], thus, ethanol recovery from biodiesel is not necessary leading to lower production cost.
- Use non-catalytic supercritical methanol for transesterification/esterification reaction to simplify the biodiesel production process. Using co-solvent, such as propane [6] or carbon dioxide [7], reduces severity of the conditions preventing thermal degradation may leading more feasible biodiesel production processes.

References

1. Liu, Y., Lotero, E., Goodwin Jr., J.G. 2006. Effect of carbon chain length on esterification of carboxylic acids with methanol using acid catalysis. J. Cat. 243, 211-228.
2. Sundmacher, K., Kienle, A. 2003. Reactive distillation: Status and future directions, WILEY-VCH; Weinheim.
3. Shin, H-Y., Lim, S-M., Bae, S-Y. 2011. Thermal decomposition and stability of fatty acid methyl esters in supercritical methanol. J Anal Appl Pyrolysis 92, 332-338.
4. Torres-Jimenez, E., Svoljšak-Jerman, M., Gregorc, A. et al. 2010. Physical and chemical properties of ethanol-biodiesel blends for diesel engines. Energy Fuels 24, 2002-2009.
5. Bhale, P.V., Deshpande, N.V., Thombre, S.B. 2009. Improving the low temperature properties of biodiesel fuel. Renew. Energy 34, 794-800.
6. Cao, W., Han, H., Zhang, J. 2005. Preparation of biodiesel from soybean oil using supercritical methanol and co-solvent. Fuel 84, 347-351.

7. Han, H., Cao, W., Zhang, J. 2005. Preparation of biodiesel from soybean oil using supercritical methanol and CO_2 as co-solvent. Process Biochem. 40, 3148-3151.

APPENDIX A: Chemical Properties

Table A-1. Hazardous identification and first aid measures.

Compound	Hazards Identification	First Aid Measures
Ammonia	Inhalation may be fatal as a result of spasm inflammation and edema of the larynx and bronchi, chemical pneumonitis and pulmonary edema. Swallowing can cause severe burns of the mouth, throat, and stomach, leading to death. Dermal contact with alkaline corrosives may produce pain, redness, severe irritation or full thickness burns. Eye exposure may result in temporary or permanent blindness.	Remove to fresh air. If not breathing, give artificial respiration. If swallowed, DO NOT INDUCE VOMITING. Give large quantities of water. Immediately flush skin with plenty of water for at least 15 minutes. Immediately flush eyes with plenty of water for at least 15 minutes.
Calcium and Lanthanum	Not available	Not available
Calcium oxide	Causes severe irritation and burns. Harmful if swallowed. Avoid breathing vapor or dust. Use with adequate ventilation. Avoid contact with eyes, skin, and clothes.	Wash exposed area with soap and water. Wash eyes with plenty of water for at least 15 minutes, lifting lids occasionally. Give several glasses of milk or water in case of ingestion.
Carbon dioxide	Avoid contact with skin and clothing. Avoid breathing gas. Do not puncture or incinerate container. Keep container closed.	Immediately flush eyes with plenty of water for at least 15 minutes in case of eye contact. Immediately flush skin with plenty of water. If inhaled, remove to fresh air. Do not induce vomiting unless directed to do so by medical personnel.
Dibutyltin oxide	Causes severe eye irritation. Causes skin irritation. May be fatal if swallowed. Causes respiratory tract irritation.	Immediately flush eyes with plenty of water for at least 15 minutes, occasionally lifting the upper and lower eyelids. Flush skin with plenty of water for at least 15 minutes. Remove from exposure and move to fresh air immediately.
FAME (Methyl-oleate)	May cause eye irritation. Non-irritating to the skin. May cause irritation of the digestive tract. May cause respiratory tract irritation.	Flush eyes with plenty of water for at least 15 minutes, occasionally lifting the upper and lower eyelids. Flush skin with plenty of water for at least 15 minutes. Wash mouth out with water. Remove from exposure and move to fresh air immediately.
Glycerol	Inhalation of mist may cause irritation of respiratory tract. Ingestion may cause nausea, headache, diarrhea. Skin contact and eye contact may cause irritation.	Remove to fresh air. Induce vomiting immediately as directed by medical personnel. Immediately flush skin with plenty of water for at least 15 minutes. Immediately flush eyes with plenty of water for at least 15 minutes.
Glycerol carbonate	No known significant effects or critical hazards.	Immediately flush eyes with plenty of water. Flush contaminated skin with plenty of water. Move exposed person to fresh air. Wash out mouth with water.
Lanthanum oxide	Hazardous in case of ingestion. Slightly hazardous in case of skin contact (irritant), of eye contact (irritant), of inhalation.	No known effect on eye contact. Wash immediately with plenty of water after contact with skin. All the victim to rest in a well-ventilated area.
Lauric acid	Very hazardous in case of ingestion. Hazardous in case of skin contact (irritant), of eye contact (irritant), of inhalation.	Wash immediately with plenty of water after contact with skin. Allow the victim to rest in a well-ventilated area. Do not induce vomiting.
Methyl dodecanoate	Slightly hazardous in case of skin contact (irritant), of eye contact (irritant), or ingestion, of inhalation.	Immediately flush eyes with plenty of water for at least 15 minutes. Cover the irritated skin with an emollient. In inhaled, remove to fresh air.
Methanol	Inhalation of high airborne concentrations can also irritate mucous membranes. Methanol is moderately irritating to the skin. Methanol is a mild to moderate eye irritant. Swallowing even small amounts of methanol could potentially cause blindness or death.	In case of contact, immediately flush eyes with plenty of clean running water for at least 15 minutes. Wash affected areas with soap and water for at least 15 minutes. Remove to fresh air, restore or assist breathing if necessary.
Oil (Triolein)	Slightly hazardous in case of skin contact (irritant), of eye contact (irritant), of ingestion, of inhalation.	Immediately flush eyes with plenty of water for at least 15 minutes. Cover the irritated skin with an emollient. In inhaled, remove to fresh air.
Phosphoric acid	Corrosive liquid. Causes chemical burns to skin and eyes. Airborne mists are harmful and corrosive to respiratory tract. Harmful if swallowed.	Remove affected person to fresh air. Wash affected area with soap and water. Immediately flush eyes for 15 minutes in clear running water. Drink two glasses of water followed by milk, milk of magnesia or other non-alcoholic liquids.
Sodium phosphate tribasic	Mildly toxic by ingestion. Corrosive to body tissues. Avoid all body tissues contact.	Immediately flush eyes with plenty of water for at least 15 minutes. Give no more than 1-2 cups of water for dilution.
Sodium hydroxide	May be fatal if swallowed. Harmful if inhaled. Causes burns to any area of contact.	Remove to fresh air. Give large quantities of water or milk if available. Immediately flush skin with plenty of water for at least 15 minutes.
Urea	Hazardous in case of skin contact (irritant), of eye contact (irritant) of ingestion, of inhalation.	Immediately flush eyes with plenty of water for at least 15 minutes. Cover the irritated skin with an emollient. If inhaled, remove to fresh air.
Water	Non-corrosive, non-irritant, non-permeator, and non-sensitizer.	N/A
Zirconium sulfate	Inhalation causes respiratory tract irritation. Contact causes skin irritation. The toxicological properties of this substance have not been fully investigated.	In case of ingestion, wash mouth out with water. Remove from exposure to fresh air immediately. Flush skin with plenty of soap and water for at least 15 minutes.

Table A-2. Fire fighting measures, accidental release measures, and handling and storage.

Compound	Fire Fighting Measures	Accidental Release Measure	Handling and Storage
Ammonia	Autoignition temperature is 65°C. Evacuate all personnel from area in case of fire. Stop the flow of ammonia, then fight fire according to types of materials that are burning.	Evacuate immediate are if ammonia is released or spilled. Eliminate any possible sources of ignition, and provide maximum explosion-proof ventilation.	Store cylinders in a well-ventilated, secure area, protected from the weather. There should be no sources of ignition.
Calcium and Lanthanum	Not available	Not available	Not available
Calcium oxide	Use any means suitable for extinguishing surrounding fire.	Sweep up and place in suitable containers for reclamation or later disposal.	Store in a cool, dry, well-ventilated place away from incompatible materials.
Carbon dioxide	Non-flammable	Avoid dispersal of spilled material and runoff and contact with soil, waterways, drains and sewers.	Avoid contact with eyes, skin and clothing. Keep container tightly closed.
Dibutyltin oxide	As in any fire, wear a self-contained breathing apparatus in pressure-demand and full protective gear. Autoignition temperature is 140°C.	Vacuum or sweep up material and place into a suitable disposal container. Clean up spills immediately.	Wash thoroughly after handling. Store in a tightly closed container.
FAME (Methyl-oleate)	As in any fire, wear a self-contained breathing apparatus in pressure-demand and full protective gear.	Use proper personal protective equipment.	Avoid breathing dust, vapor, mist, or gas. Store in a cool, dry place.
Glycerol	Autoignition temperature is 370°C. Slight fire hazard when exposed to heat or flame.	Ventilate area of leak or spill.	Keep in a tightly closed container, stored in a cool, dry, ventilated area.
Glycerol carbonate	Use an extinguishing agent suitable for the surrounding fire.	Avoid breathing vapor or mist. Provide adequate ventilation.	Put on appropriate personal protective equipment. Store in accordance with local regulations.
Lanthanum oxide	Non-flammable	Use appropriate tools to put the spilled solid in a convenient waste disposal container.	No specific storage is required. Use shelves or cabinets sturdy enough to bear the weight of the chemicals.
Lauric acid	May be combustible at high temperature.	Use appropriate tools to put the spilled solid in a convenient waste disposal container.	Keep away from heat and sources of ignition. Keep in cool and dry container.
Methyl dodecanoate	May be combustible at high temperature.	Absorb with an inert material and put the spilled material in an appropriate waste disposal.	Keep away from heat and sources of ignition. Keep container tightly closed.
Methanol	Autoignition temperature is 385 ^{o}C. Methanol burns with a clean clear flame that is almost invisible in daylight.	Soak up spill with non-combustible absorbent material.	No smoking or open flame in storage, use or handling areas. Store in totally enclosed equipment, designed to avoid ignition and human contact.
Oil (Triolein)	May be combustible at high temperature.	Absorb with an inert material and put the spilled material in an appropriate waste disposal.	Keep away from heat and sources of ignition. Keep tightly closed in a dry and cool place.
Phosphoric acid	Polyphosphoric acid reacts with water to generate heat and form phosphoric acid. Contact with metals forms flammable and corrosive hydrogen.	Confine spill, soak up with approved absorbent, shovel product into approved container for disposal.	Keep container closed when not in use.
Sodium phosphate tribasic	When heated to decomposition, emits toxic fumes of Pox and Na2O. Use triclass, dry chemical fire extinguisher.	Restrict unprotected personnel from area. Sweep up, place in sealed bag or container and dispose.	Store in a cool dry place.
Sodium hydroxide	Not considered to be a fire hazard. Hot or molten material can react violently with water.	Ventilate area of leak or spill. Keep unnecessary and unprotected people away from area of spill.	Store in a cool, dry, ventilated area away from sources of heat, moisture and incompatibilities.
Urea	May be combustible at high temperature.	Use appropriate tools to put the spilled solid in a convenient waste disposal container.	Keep away from heat and sources of ignition.
Water	Non-flammable.	Mob up, or absorb with an inert dry material and place in an appropriate waste disposable container.	Not applicable.
Zirconium sulfate	Nonflammable	Vacuum or sweep up material and place into a suitable disposal container.	Not available

Table A-3. Physical and chemical properties.

Compound	Boiling Point (°C)	Melting Point (°C)	Critical Temperature (°C)	Specific Gravity
Ammonia	-33.4	-77.7	132.4	0.59
Calcium and Lanthanum	__	__	__	__
Calcium oxide	2850	2570	__	3.33
Carbon dioxide	78.55	-78.5	30.9	1.22
Dibutyltin oxide	__	__	__	__
FAME (Methyl-oleate)	343.85	-13	__	0.870
Glycerol	290	18	__	1.26
Glycerol carbonate	323.235	-69	__	__
Lanthanum oxide	4200	2307	__	6.51
Lauric acid	298.7	44	__	0.8679
Methyl dodecanoate	266.85	5.2	__	0.8702
Methanol	64.7	-97.8	239.4	0.7915
Oil (Triolein)	846.85	-4	__	0.914
Phosphoric acid	271	0	__	2.04
Sodium phosphate tribasic	__	75	__	1.62
Sodium hydroxide	1390	318	__	2.13
Urea	__	132.7	__	1.323
Water	100	0	__	1
Zirconium sulfate	410	__	__	__

Table A-4. Stability and reactivity.

Compound	Stability and Reactivity
Ammonia	Stable at room temperature in sealed containers but must avoid high temperatures (greater than 426°C). Incompatible with copper, silver, cadmium and zinc and their alloys; mercury tin acids, alcohols, aldehydes, oxidizers and halogens. Polymerization will not occur but will decompose at high temperatures.
Calcium and Lanthanum	Not available
Calcium oxide	Stable at room temperature in sealed containers. No hazardous polymerization or decomposition. Incompatible with organic materials, acids, moisture.
Carbon dioxide	Stable at room temperature in sealed containers. Avoid exposure to electrical discharges, high temperature, and/or contact with incompatible materials, such as alkali metals, alkaline earth metals, metal acetylides, chromium, titanium above 550°C, uranium above 750°C, magnesium above 775°C.
Dibutyltin oxide	Stable under normal temperatures and pressures. Hazardous polymerization will not occur. Avoid acids and oxidizing agents. Thermal decomposition giving flammable and toxic products.
FAME (Methyl-oleate)	Stable and hazardous polymerization will not occur. Incompatible with strong oxidizing agents. Combustion produces carbon monoxide, carbon dioxide along with thick smoke.
Glycerol	Stable under ordinary conditions of use and storage. Avoid contact with incompatible materials, excess heat and ignition, sources, moisture. Highly reactive with oxidizing agents. Can react violently with acetic anhydride, calcium oxychloride, chromium. Polymerization will not occur.
Glycerol carbonate	The product is stable. Hazardous polymerization is not available.
Lanthanum oxide	The product is stable. Non-corrosive in presence of glass.
Lauric acid	Stable under normal conditions of use and storage. Avoid heat and moisture. Incompatible with strong oxidizing agents, alkalis.
Methyl dodecanoate	The product is stable. Reactive with oxidizing agents, alkalis.
Methanol	Stable under ordinary conditions of use and storage. Avoid contact with strong oxidizers, strong mineral or organic acids, and strong bases. Avoid contact with sparks, heat open flame, or ignition sources. Hazardous polymerization does not occur. Hazardous decomposition to formaldehyde, carbon dioxide, and carbon monoxide.
Oil (Triolein)	Stable under recommended storage conditions. Reactive with oxidizing agents. Polymerization will not occur.
Phosphoric acid	Avoid extreme temperatures, strong oxidizers, alkalies, alcohols, ketones, amines and combustible material. Decomposition will not occur if handled and stored properly. Reacts with water to generate heat and form phosphoric acid. Polymerization will not occur.
Sodium phosphate tribasic	The product is stable. Reactive with moisture. Non-corrosive in presence of glass. Sodium phosphate tribasic forms a strong caustic solution similar to soda lye. When wet, mild steel and brass may be corroded by sodium phosphate tribasic. Polymerization will not occur.
Sodium hydroxide	Stable under ordinary conditions of use and storage. Very hygroscopic. Can slowly pick up moisture from air and react with carbon dioxide from air to form sodium carbonate. Decomposition by reaction with certain metals releases flammable and explosive hydrogen gas. Polymerization will not occur. Avoid moisture, dusting and incompatibles. Sodium hydroxide in contact with acids and organic halogen compounds, especially trichloroethylene, may causes violent reactions.
Urea	Avoid excess heat, excess dust generation, incompatible materials. Reactive with oxidizing agents. Absorbs moisture from air. Reacts violently with gallum perchlorate. Polymerization will not occur.
Water	The product is stable. Polymerization will not occur.
Zirconium sulfate	Corrosive to aluminum and other materials. Stable under normal temperatures and pressures. Decompose to irritating and toxic fumes and gases, sulfuric acid.

Table A-5. Hazardous identification and first aid measures.

Compound	Toxicological Information	Ecological Information
Ammonia	Hazardous in case of skin contact (corrosive), of eye contact (corrosive), of inhalation (lung corrosive).	Do not release large amounts of ammonia to the atmosphere. Ammonia is very toxic to aquatic organisms.
Calcium and Lanthanum		
Calcium oxide	Very hazardous in case of contact (irritant), of ingestion, of inhalation. Hazardous in case of skin contact (corrosive, permeator), of eye contact (corrosive).	The product itself and its products of degradation are not toxic.
Carbon dioxide	Carbon dioxide is an asphyxiant. It initially stimulates respiration and then causes respiratory depression.	No adverse ecological effects expected.
Dibutyltin oxide	Reacts with gastric acid to form organotin chlorides.	Highly toxic to aquatic organisms.
FAME (Methyl-oleate)	The toxicological properties have not been fully investigated.	Readily biodegradable. Do not empty into drains.
Glycerol	Slightly hazardous in case of skin contact (irritant), of ingestion, of inhalation.	The products of degradation are less toxic than the product itself.
Glycerol carbonate	No known significant effects or critical hazards.	This product shows a slow bioaccumulation potential.
Lanthanum oxide	Hazardous in case of ingestion. Slightly hazardous in case of skin contact (irritant), or inhalation.	The products of degradation are more toxic.
Lauric acid	Very hazardous in case of ingestion. Hazardous in case of skin contact (irritant), or inhalation.	Toxic to aquatic and terrestrial plants and animals. Do not release into the environment.
Methyl dodecanoate	Slightly hazardous in case of skin contact (irritant) of ingestion, of inhalation.	The product itself and its products of degradation are not toxic.
Methanol	Hazardous in case of skin contact (irritant), of ingestion, of inhalation.	Methanol in fresh or salt water may have serious effects on aquatic life. Biodegrades easily in water.
Oil (Triolein)	Slightly hazardous in case of skin contact (irritant), or ingestion, of inhalation.	The product itself and its products of degradation are not toxic.
Phosphoric acid	May be harmful to inhalation, ingestion, or skin absorption.	Phosphoric acid is practically nontoxic to one species of fresh water first.
Sodium phosphate tribasic	Extremely hazardous in case of skin contact (corrosive), of eye contact (corrosive) and inhalation (lung corrosive).	The products of degradation are as toxic as the original product.
Sodium hydroxide	Extremely hazardous in case of inhalation (lung corrosive). Very hazardous in case of skin contact (corrosive, irritant, permeator), of eye contact (corrosive), of ingestion.	The product itself and its products of degradation are not toxic.
Urea	Hazardous in case of skin contact (irritant), of ingestion, of inhalation.	Particulate-phase urea is physically washed out of the atmosphere by dry and wet deposition. In the soil, urea degrades rapidly, usually within 24 hours.
Water	Non-corrosive, non-irritant, non-permeator, and non-sensitizer.	The product itself and its products of degradation are not toxic.
Zirconium sulfate	Not available	Not available

APPENDIX B: Retrofitted Design

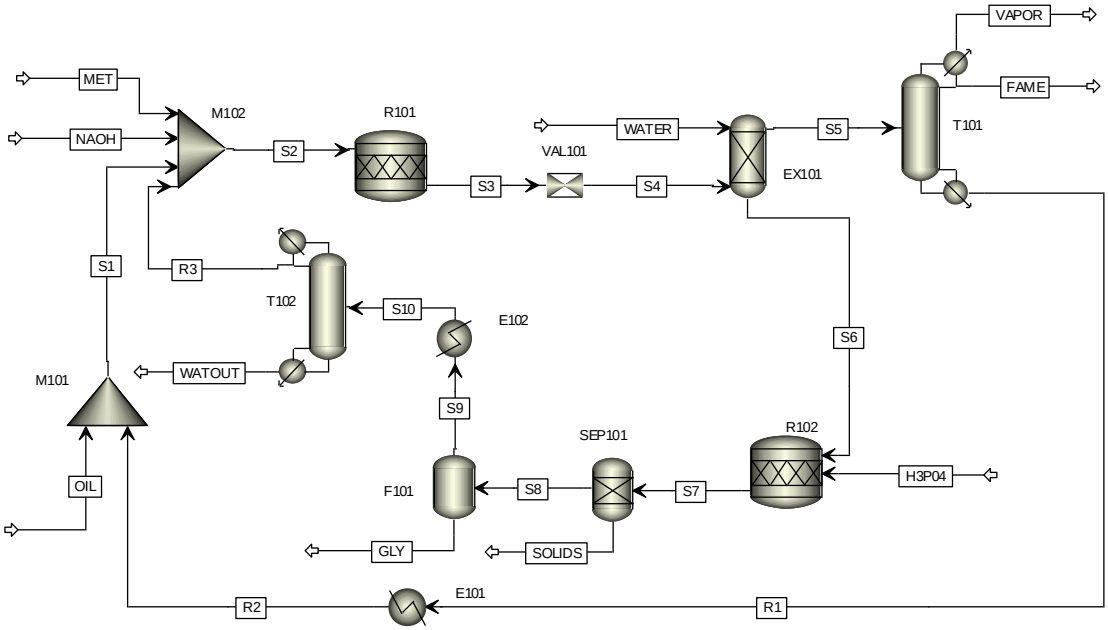

Fig. B-1. Flow diagram of biodiesel plant with retrofitted distillation columns.

Table B-1. Input summary of the retrofitted design (Fig. B-1).

```
;Input Summary created by Aspen Plus Rel. 25.0 at 16:30:49 Fri Aug 31, 2012
;Directory C:\Users\NGHI\Desktop\most recent  Filename C:\Users\NGHI\AppData\Local\Temp\~ap6eb2.txt

COMPONENTS
   METHANOL CH4O /
   OIL C57H104O6 /
   FAME C19H36O2 /
   GLYCEROL C3H8O3 /
   NAOH H2O /
   WATER H2O /
   H3PO4 H2O /
   NA3PO4 H2O

FLOWSHEET
   BLOCK M102 IN=METHANOL NAOH S1 R3 OUT=S2
   BLOCK M101 IN=OIL R2 OUT=S1
   BLOCK R101 IN=S2 OUT=S3
   BLOCK EXTR101 IN=WATER S4 OUT=S5 S6
   BLOCK R102 IN=S6 H3P04 OUT=S7
   BLOCK SEP101 IN=S7 OUT=S8 SOLIDS
   BLOCK T101 IN=S5 OUT=VAPOR FAME R1
   BLOCK E101 IN=R1 OUT=R2
   BLOCK T102 IN=S10 OUT=R3 WATEROUT
   BLOCK F101 IN=S8 OUT=S9 GLYCEROL
   BLOCK VALVE101 IN=S3 OUT=S4
   BLOCK E102 IN=S9 OUT=S10

STREAM H3P04
   SUBSTREAM MIXED TEMP=25. PRES=1.
   MOLE-FLOW H3PO4 0.8

STREAM METHANOL
   SUBSTREAM MIXED TEMP=25. PRES=1.
   MASS-FLOW METHANOL 1132.14

STREAM NAOH
   SUBSTREAM MIXED TEMP=25. PRES=1.
   MOLE-FLOW NAOH 2.4

STREAM OIL
   SUBSTREAM MIXED TEMP=25. PRES=1.
   MASS-FLOW OIL 9643.568

STREAM R2
   SUBSTREAM MIXED TEMP=25. PRES=1.1
   MASS-FLOW OIL 356.432 / FAME 140.

STREAM R3
   SUBSTREAM MIXED TEMP=64.64 PRES=1.
   MASS-FLOW METHANOL 1039.11 / WATER 12.62

STREAM WATER
   SUBSTREAM MIXED TEMP=25. PRES=1.
   MASS-FLOW WATER 142.

BLOCK M101 MIXER

BLOCK M102 MIXER

BLOCK SEP101 SEP
   PARAM
   FRAC STREAM=SOLIDS SUBSTREAM=MIXED COMPS=METHANOL OIL  &
      FAME GLYCEROL NAOH WATER H3PO4 NA3PO4 FRACS=0. 0. 0.  &
      0. 1. 0. 1. 1.

BLOCK E101 HEATER
   PARAM TEMP=25. PRES=1. NPHASE=1 PHASE=L
   BLOCK-OPTION FREE-WATER=NO

BLOCK E102 HEATER
   PARAM TEMP=80. PRES=1.

BLOCK F101 FLASH2
   PARAM TEMP=100. PRES=0.05

BLOCK T101 RADFRAC
   PARAM NSTAGE=4
```

```
   COL-CONFIG CONDENSER=PARTIAL-V-L
   FEEDS S5 2
   PRODUCTS FAME 1 L / R1 4 L / VAPOR 1 V
   P-SPEC 1 0.08
   COL-SPECS DP-COL=0.1 MASS-RDV=0.01 MASS-B=500. MASS-RR=1.
   SPEC 1 MASS-FLOW 140. COMPS=FAME STREAMS=R1
   VARY 1 MASS-B 460. 540.
   TRAY-SIZE 1 2 3 SIEVE
   TRAY-RATE 1 2 3 SIEVE DIAM=3.81055112 P-UPDATE=NO
   REPORT TARGET HYDANAL

BLOCK T102 RADFRAC
   PARAM NSTAGE=12 MAXOL=100 DAMPING=MILD
   COL-CONFIG CONDENSER=TOTAL
   RATESEP-ENAB CALC-MODE=EQUILIBRIUM
   FEEDS S10 9
   PRODUCTS R3 1 L / WATEROUT 12 L
   P-SPEC 1 1. / 2 1.
   COL-SPECS MASS-D=1045. MASS-RR=2.
   SPEC 1 MASS-FRAC 0.988 COMPS=METHANOL STREAMS=R3
   SPEC 2 TEMP 100.190282 STAGE=12
   VARY 1 MASS-RR 1.4 2.3
   VARY 2 MASS-D 1030. 1060.
   TRAY-SIZE 1 2 11 SIEVE
   TRAY-RATE 1 2 11 SIEVE DIAM=0.6874887 P-UPDATE=NO
   PROPERTIES NRTL FREE-WATER=STEAM-TA SOLU-WATER=3  &
      TRUE-COMPS=YES
   REPORT TARGET HYDANAL
   NQ-CURVE CURVE-NO=1 NSTAGE-MIN=11 NSTAGE-MAX=12  &
      NSTAGE-STEP=1 FEED=S10

BLOCK EXTR101 EXTRACT
   PARAM NSTAGE=6
   FEEDS WATER 1 / S4 6
   PRODUCTS S5 1 L2 / S6 6 L1
   P-SPEC 1 1.
   L1-COMPS GLYCEROL
   L2-COMPS FAME
   T-EST 1 25.

BLOCK R101 RSTOIC
   PARAM TEMP=60. PRES=4.
   STOIC 1 MIXED OIL -1. / METHANOL -3. / FAME 3. /  &
      GLYCEROL 1.
   CONV 1 MIXED OIL 0.95

BLOCK R102 RSTOIC
   PARAM TEMP=50. PRES=1.
   STOIC 1 MIXED NAOH -3. / H3PO4 -1. / NA3PO4 1. /  &
      WATER 3.
   CONV 1 MIXED NAOH 1.

BLOCK VALVE101 VALVE
   PARAM P-OUT=1.

EO-CONV-OPTI

TEAR
   TEAR R2 / R3

STREAM-REPOR MOLEFLOW MASSFLOW MASSFRAC

PROPERTY-REP PCES NOPARAM-PLUS
```

Table B-2. Column T101 results summary of the retrofitted design (Fig. B-1).

```
BLOCK:  T101     MODEL: RADFRAC
 -------------------------------
   INLETS   - S5      STAGE   2
   OUTLETS  - VAPOR    STAGE   1
            FAME     STAGE   1
            R1       STAGE   4

                 ***  MASS AND ENERGY BALANCE  ***
                          IN            OUT       RELATIVE DIFF.
   TOTAL BALANCE
     MOLE(KMOL/HR )          38.0332        38.0332        0.00000
     MASS(KG/HR   )          10310.3        10310.3       -0.564003E-09
     ENTHALPY(KW      )      -7072.11       -7026.30       -0.647728E-02

                  **********************
                  ****  INPUT DATA  ****
                  **********************

  ****   INPUT PARAMETERS   ****

   NUMBER OF STAGES                                    4
   ALGORITHM OPTION                                    STANDARD
   ABSORBER OPTION                                     NO
   INITIALIZATION OPTION                               STANDARD
   HYDRAULIC PARAMETER CALCULATIONS                    NO
   INSIDE LOOP CONVERGENCE METHOD                      BROYDEN
   DESIGN SPECIFICATION METHOD                         NESTED
   MAXIMUM NO. OF OUTSIDE LOOP ITERATIONS              25
   MAXIMUM NO. OF INSIDE LOOP ITERATIONS               10
   MAXIMUM NUMBER OF FLASH ITERATIONS                  30
   FLASH TOLERANCE                                     0.000100000
   OUTSIDE LOOP CONVERGENCE TOLERANCE                  0.000100000

  ****   COL-SPECS   ****

   MASS VAPOR DIST / TOTAL DIST                        0.0100000
   MASS REFLUX RATIO                                   1.00000
   MASS BOTTOMS RATE            KG/HR                  500.000

  ****    PROFILES   ****

   P-SPEC         STAGE   1  PRES, BAR                 0.080000

                  *******************
                  ****  RESULTS  ****
                  *******************

  ***   COMPONENT SPLIT FRACTIONS   ***

                     OUTLET STREAMS
                     --------------
             VAPOR        FAME         R1
   COMPONENT:
   METHANOL    .75617       .24383       .86450E-09
   OIL         .27294E-03   .28697       .71275
   FAME        .23676E-06   .98554       .14460E-01
   GLYCEROL    .11789E-01   .96504       .23174E-01
   NAOH        .78637       .21363       .68806E-10
   WATER       .78637       .21363       .68806E-10


  ***    SUMMARY OF KEY RESULTS    ***

   TOP STAGE TEMPERATURE          C                    48.2311
   BOTTOM STAGE TEMPERATURE       C                    297.697
   TOP STAGE LIQUID FLOW          KMOL/HR              33.8008
   BOTTOM STAGE LIQUID FLOW       KMOL/HR              0.87467
   TOP STAGE VAPOR FLOW           KMOL/HR              3.69572
   BOILUP VAPOR FLOW              KMOL/HR              128.101
   MOLAR REFLUX RATIO                                  0.90964
   MOLAR BOILUP RATIO                                  146.457
   CONDENSER DUTY (W/O SUBCOOL)   KW                   -4,100.14
   REBOILER DUTY                  KW                   4,145.89


  ****   MANIPULATED VARIABLES   ****
```

```
                                BOUNDS          CALCULATED
                             LOWER       UPPER       VALUE
 MASS BOTTOMS RATE        KG/HR      460.00      540.00      496.38

 ****   DESIGN SPECIFICATIONS   ****

NO  SPEC-TYPE    QUALIFIERS           UNIT      SPECIFIED    CALCULATED
                                     VALUE        VALUE
 1  MASS-FLOW    STREAMS: R1          KG/HR      140.00      140.00
            COMPS:   FAME

 ****   MAXIMUM FINAL RELATIVE ERRORS   ****

  DEW POINT                  0.51732E-02  STAGE=  1
  BUBBLE POINT               0.49584E-04  STAGE=  3
  COMPONENT MASS BALANCE     0.30488E-08  STAGE=  2 COMP=OIL
  ENERGY BALANCE             0.15083E-03  STAGE=  1

 ****   PROFILES   ****

 **NOTE** REPORTED VALUES FOR STAGE LIQUID AND VAPOR RATES ARE THE FLOWS
       FROM THE STAGE INCLUDING ANY SIDE PRODUCT.

                             ENTHALPY
STAGE TEMPERATURE   PRESSURE          KJ/KMOL          HEAT DUTY
    C          BAR          LIQUID      VAPOR       KW

 1   48.231      0.80000E-01  -0.70500E+06 -0.21647E+06  -4100.1353
 2   260.84      0.11333      -0.59378E+06 -0.48472E+06
 3   273.19      0.14667      -0.68312E+06 -0.50222E+06
 4   297.70      0.18000      -0.10329E+07 -0.56423E+06   4145.8942

STAGE    FLOW RATE              FEED RATE            PRODUCT RATE
        KMOL/HR                KMOL/HR              KMOL/HR
    LIQUID    VAPOR      LIQUID   VAPOR   MIXED    LIQUID   VAPOR
 1  67.26     3.696              3.4823           33.4627   3.6957
 2  168.1     67.48      34.5508
 3  129.0     167.2
 4 0.8747     128.1                              0.8746

  ****  MASS FLOW PROFILES  ****

STAGE    FLOW RATE              FEED RATE            PRODUCT RATE
        KG/HR                  KG/HR                KG/HR
    LIQUID    VAPOR      LIQUID   VAPOR   MIXED    LIQUID   VAPOR
 1 0.1953E+05  98.14             92.6580          9715.8115   98.1395
 2 0.5220E+05 0.1954E+05  .10218+05
 3 0.4684E+05 0.5171E+05
 4  496.4     0.4635E+05                          496.3752

                ****   MOLE-X-PROFILE     ****
 STAGE    METHANOL     OIL         FAME        GLYCEROL     NAOH
   1    0.21587E-01  0.48426E-02  0.96175      0.40850E-11  0.69537E-06
   2    0.73410E-04  0.23984E-01  0.97592      0.25663E-11  0.12610E-08
   3    0.34488E-06  0.11324      0.88676      0.24049E-11  0.27450E-11
   4    0.29281E-08  0.46015      0.53985      0.37530E-11  0.85683E-14

                ****   MOLE-X-PROFILE     ****
 STAGE    WATER
   1    0.11815E-01
   2    0.21426E-04
   3    0.46642E-07
   4    0.14558E-09

                ****   MOLE-Y-PROFILE     ****
 STAGE    METHANOL     OIL         FAME        GLYCEROL     NAOH
   1    0.60615      0.41703E-04  0.20920E-05  0.45186E-12  0.23176E-04
   2    0.23491E-01  0.48234E-02  0.95871      0.40753E-11  0.76337E-06
   3    0.73794E-04  0.21702E-01  0.97820      0.25601E-11  0.12676E-08
   4    0.34721E-06  0.11087      0.88913      0.23957E-11  0.27637E-11

                ****   MOLE-Y-PROFILE     ****
 STAGE    WATER
   1    0.39378
   2    0.12971E-01
   3    0.21539E-04
   4    0.46959E-07

                ****   K-VALUES          ****
```

```
 STAGE     METHANOL      OIL          FAME         GLYCEROL      NAOH
   1    28.083      0.86077E-02   0.21870E-05   0.11076       33.323
   2    320.01      0.20111       0.98235       1.5881        605.36
   3    213.95      0.19164       1.1032        1.0644        461.75
   4    118.59      0.24095       1.6470        0.63840       322.57

                ****   K-VALUES          ****
 STAGE     WATER
   1    33.323
   2    605.36
   3    461.75
   4    322.57

                ****   MASS-X-PROFILE     ****
 STAGE     METHANOL      OIL          FAME         GLYCEROL      NAOH
   1    0.23823E-02   0.14768E-01   0.98212       0.12957E-11   0.95791E-07
   2    0.75732E-05   0.68375E-01   0.93162       0.76094E-12   0.16239E-09
   3    0.30427E-07   0.27607       0.72393       0.60983E-12   0.30231E-12
   4    0.16532E-09   0.71796       0.28204       0.60904E-12   0.60388E-15

                ****   MASS-X-PROFILE     ****
 STAGE     WATER
   1    0.73310E-03
   2    0.12428E-05
   3    0.23136E-08
   4    0.46216E-11

                ****   MASS-Y-PROFILE     ****
 STAGE     METHANOL      OIL          FAME         GLYCEROL      NAOH
   1    0.73140       0.13906E-02   0.23358E-04   0.15671E-11   0.34907E-04
   2    0.25999E-02   0.14752E-01   0.98184       0.12964E-11   0.10546E-06
   3    0.76459E-05   0.62139E-01   0.93785       0.76240E-12   0.16395E-09
   4    0.30751E-07   0.27134       0.72866       0.60984E-12   0.30554E-12

                ****   MASS-Y-PROFILE     ****
 STAGE     WATER
   1    0.26715
   2    0.80712E-03
   3    0.12547E-05
   4    0.23383E-08

            ************************************
            ***** COLUMN TARGETING RESULTS *****
            ************************************

  *** THERMAL ANALYSIS ***

STAGE TEMPERATURE   PRESSURE   ENTHALPY DEFICIT   CARNOT FACTOR
    C            BAR            KW            KW
 1  48.231      0.80000E-01    4100.1          0.72285E-01
 2  260.84      0.11333        4252.5          0.44166
 3  273.19      0.14667        4064.3          0.45427
 4  297.70      0.18000        4145.9          0.47771

  *** HYDRAULIC ANALYSIS ***

      *** MOLE BASIS ***

STAGE                VAPOR TO
     IDEAL MINIMUM       ACTUAL        HYDRAULIC MAXIMUM
      KMOL/HR            KMOL/HR          KMOL/HR
 1   0.0000            70.959            131.53
 2  0.22808E-02         167.20            309.92
 3   3.3151            128.10            312.01
 4   0.0000            0.0000            0.0000


STAGE                LIQUID FROM
     IDEAL MINIMUM       ACTUAL        HYDRAULIC MAXIMUM
      KMOL/HR            KMOL/HR          KMOL/HR
 1   0.0000            67.264            124.68
 2  0.87695            168.07            311.54
 3   4.1897            128.98            314.14
 4   0.0000           0.87467            2.1304

      *** MASS BASIS ***

STAGE                VAPOR TO
     IDEAL MINIMUM       ACTUAL        HYDRAULIC MAXIMUM
```

```
      KG/HR            KG/HR          KG/HR
  1   0.0000          19628.         36382.
  2  0.66033           51706.         95842.
  3   1025.2          46345.        0.11288E+06
  4   0.0000          0.0000         0.0000


STAGE                LIQUID FROM
     IDEAL MINIMUM       ACTUAL       HYDRAULIC MAXIMUM
      KG/HR            KG/HR          KG/HR
  1   0.0000          9814.0         36200.
  2   272.37          52202.         96762.
  3   1521.6          46842.        0.11409E+06
  4   0.0000          496.38         1209.0

            *********************************
            ***** HYDRAULIC PARAMETERS *****
            *********************************

    *** DEFINITIONS ***

     MARANGONI INDEX = SIGMA - SIGMATO
     FLOW PARAM = (ML/MV)*SQRT(RHOV/RHOL)
     QR = QV*SQRT(RHOV/(RHOL-RHOV))
     F FACTOR = QV*SQRT(RHOV)
       WHERE:
       SIGMA IS THE SURFACE TENSION OF LIQUID FROM THE STAGE
       SIGMATO IS THE SURFACE TENSION OF LIQUID TO THE STAGE
       ML IS THE MASS FLOW OF LIQUID FROM THE STAGE
       MV IS THE MASS FLOW OF VAPOR TO THE STAGE
       RHOL IS THE MASS DENSITY OF LIQUID FROM THE STAGE
       RHOV IS THE MASS DENSITY OF VAPOR TO THE STAGE
       QV IS THE VOLUMETRIC FLOW RATE OF VAPOR TO THE STAGE

              TEMPERATURE
                C
STAGE      LIQUID FROM      VAPOR TO
  1        48.231           260.03
  2        260.84           273.19
  3        273.19           297.70
  4        297.70           297.70

         MASS FLOW              VOLUME FLOW        MOLECULAR WEIGHT
         KG/HR                  CUM/HR
STAGE LIQUID FROM  VAPOR TO   LIQUID FROM  VAPOR TO   LIQUID FROM  VAPOR TO
  1   19530.     19628.     23.080     39014.     290.35     276.61
  2   52202.     51706.     76.760     50930.     310.59     309.25
  3   46842.     46345.     72.881     32931.     363.18     361.79
  4   496.38     0.0000    0.77229     0.0000     567.50

          DENSITY                VISCOSITY        SURFACE TENSION
          KG/CUM                 CP               DYNE/CM
STAGE LIQUID FROM  VAPOR TO    LIQUID FROM  VAPOR TO     LIQUID FROM
  1   846.18     0.50310      3.1644     0.73681E-02    29.657
  2   680.08      1.0152      0.18684    0.70307E-02    13.237
  3   642.72      1.4074      0.18001    0.65085E-02    13.420
  4   642.74                 0.18565                   16.422

     MARANGONI INDEX   FLOW PARAM         QR         REDUCED F-FACTOR
STAGE    DYNE/CM                        CUM/HR       (GM-L)**.5/MIN
  1                 0.24262E-01      951.58         0.46121E+06
  2   -16.155         0.39008E-01      1969.3         0.85527E+06
  3   0.18239         0.47295E-01      1542.7         0.65111E+06
  4    3.0022                         0.0000         0.0000

           *************************************
           ***** TRAY SIZING CALCULATIONS *****
           *************************************

  ********************
  *** SECTION   1 ***
  ********************

  STARTING STAGE NUMBER                          2
  ENDING STAGE NUMBER                          3
  FLOODING CALCULATION METHOD                        GLITSCH

  DESIGN PARAMETERS
  -----------------
```

```
PEAK CAPACITY FACTOR                          1.00000
SYSTEM FOAMING FACTOR                          1.00000
FLOODING FACTOR                              0.80000
MINIMUM COLUMN DIAMETER        METER                 0.30480
MINIMUM DC AREA/COLUMN AREA                        0.100000
HOLE AREA/ACTIVE AREA                          0.12000

TRAY SPECIFICATIONS
-------------------
TRAY TYPE                                   SIEVE
NUMBER OF PASSES                                1
TRAY SPACING                 METER                0.60960


      ***** SIZING RESULTS @ STAGE WITH MAXIMUM DIAMETER *****

STAGE WITH MAXIMUM DIAMETER                          2
COLUMN DIAMETER                METER                 3.09304
DC AREA/COLUMN AREA                            0.100000
DOWNCOMER VELOCITY             M/SEC                 0.028377
FLOW PATH LENGTH               METER                 2.12507
SIDE DOWNCOMER WIDTH           METER                 0.48398
SIDE WEIR LENGTH               METER                 2.24743
CENTER DOWNCOMER WIDTH         METER                 0.0
CENTER WEIR LENGTH             METER                 0.0
OFF-CENTER DOWNCOMER WIDTH     METER                 0.0
OFF-CENTER SHORT WEIR LENGTH   METER                 0.0
OFF-CENTER LONG WEIR LENGTH    METER                 0.0
TRAY CENTER TO OCDC CENTER     METER                 0.0

                **** SIZING PROFILES ****

  STAGE    DIAMETER     TOTAL AREA   ACTIVE AREA   SIDE DC AREA
           METER        SQM          SQM           SQM
    2      3.0930       7.5138       6.0110        0.75138
    3      2.6703       5.6004       4.4804        0.56004

         ************************************
         ***** TRAY RATING CALCULATIONS *****
         ************************************

********************
*** SECTION   1 ***
********************

STARTING STAGE NUMBER                          2
ENDING STAGE NUMBER                            3
FLOODING CALCULATION METHOD                          GLITSCH
PEAK CAPACITY FACTOR                          1.00000
SYSTEM FOAMING FACTOR                          1.00000
OVERALL TRAY EFFICIENCY                        1.00000

TRAY SPECIFICATIONS
-------------------

                !             ! !
                !       A     ! !
                ! !----------------!  AA
                ! !             !
                ! !     A       !
                !----------------!  !  AA
                !             ! !
                !             ! !
                 SINGLE CROSSFLOW TRAY


NUMBER OF PASSES                               1
DIAMETER                     METER                3.81055
TRAY SPACING                 METER                0.60960
DECK THICKNESS               METER                0.0034036
TRAY TYPE                                   SIEVE
HOLE AREA/ACTIVE AREA                          0.12000
HOLE DIAMETER                METER                0.012700

DOWNCOMER DIMENSIONS
--------------------
WEIR HEIGHT                  METER                0.050800
DC CLEARANCE                 METER                0.038100
TOP DC WIDTH                 METER                0.59635
```

***** RATING RESULTS *****

DIAMETER	METER	3.81055
STAGE-MAX FLOODING FACTOR		2
FLOODING FACTOR		0.53949
STAGE-MAX DC BACKUP/TRAY SPACE		2
DC BACKUP	METER	0.15620
DC BACKUP/TRAY SPACING		0.25623
STAGE-MAX DC VELOCITY		2
DC VELOCITY	M/SEC	0.018692
STAGE-MAX WEIRLOADING		2 (PANEL A)
WEIR LOADING	SQM/HR	27.7222
SECTION PRESSURE DROP	BAR	0.0088388
MAX APPROACH TO SYSTEM LIMIT		0.37055
STAGE-MAX SYSTEM LIMIT		2

**** RATING PROFILES ****

STAGE	FLOODING FACTOR	DC VELOCITY M/SEC	DC BACKUP METER	DC BACKUP/ TRAY SPACE	PRES. DROP BAR
2	0.5395	0.1869E-01	0.1562	0.2562	0.4778E-02
3	0.4106	0.1775E-01	0.1474	0.2417	0.4060E-02

Table B-3. Column T102 results summary of the retrofitted design (Fig. B-1).

```
BLOCK:  T102     MODEL: RADFRAC
 ------------------------------
   INLETS   - S10      STAGE   9
   OUTLETS  - R3       STAGE   1
            WATEROUT STAGE  12
  PROPERTY OPTION SET:   NRTL      RENON (NRTL) / IDEAL GAS

                 ***  MASS AND ENERGY BALANCE  ***
                          IN            OUT       RELATIVE DIFF.
   TOTAL BALANCE
     MOLE(KMOL/HR )          41.6969        41.6968       0.166978E-05
     MASS(KG/HR   )          1219.96        1219.96       0.175526E-05
     ENTHALPY(KW      )      -2434.91       -2855.43       0.147270

                  **********************
                  ****  INPUT DATA  ****
                  **********************

  ****   INPUT PARAMETERS   ****

   NUMBER OF STAGES                                    12
   ALGORITHM OPTION                                    STANDARD
   ABSORBER OPTION                                     NO
   INITIALIZATION OPTION                               STANDARD
   HYDRAULIC PARAMETER CALCULATIONS                    NO
   INSIDE LOOP CONVERGENCE METHOD                      BROYDEN
   DESIGN SPECIFICATION METHOD                         NESTED
   MAXIMUM NO. OF OUTSIDE LOOP ITERATIONS              100
   MAXIMUM NO. OF INSIDE LOOP ITERATIONS               10
   MAXIMUM NUMBER OF FLASH ITERATIONS                  30
   FLASH TOLERANCE                                     0.000100000
   OUTSIDE LOOP CONVERGENCE TOLERANCE                  0.000100000

  ****   COL-SPECS   ****

   MOLAR VAPOR DIST / TOTAL DIST                       0.0
   MASS REFLUX RATIO                                   2.00000
   MASS DISTILLATE RATE          KG/HR                 1,045.00

  ****    PROFILES   ****

   P-SPEC         STAGE   1  PRES, BAR                 1.00000
                   2                                   1.00000

                  ********************
                  ****  RESULTS  ****
                  ********************

  ***   COMPONENT SPLIT FRACTIONS   ***

                     OUTLET STREAMS
                     --------------
             R3          WATEROUT
   COMPONENT:
   METHANOL    .99992      .75584E-04
   OIL         0.0000      1.0000
   FAME        0.0000      1.0000
   GLYCEROL    0.0000      1.0000
   WATER       .77065E-01  .92294

  ***    SUMMARY OF KEY RESULTS    ***

   TOP STAGE TEMPERATURE          C                    64.6370
   BOTTOM STAGE TEMPERATURE       C                    100.190
   TOP STAGE LIQUID FLOW          KMOL/HR              52.5989
   BOTTOM STAGE LIQUID FLOW       KMOL/HR              8.56818
   TOP STAGE VAPOR FLOW           KMOL/HR              0.0
   BOILUP VAPOR FLOW              KMOL/HR              37.5012
   MOLAR REFLUX RATIO                                  1.58803
   MOLAR BOILUP RATIO                                  4.37641
   CONDENSER DUTY (W/O SUBCOOL)   KW                   -844.932
   REBOILER DUTY                  KW                   424.410


  ****   MANIPULATED VARIABLES   ****

                                 BOUNDS            CALCULATED
```

```
                              LOWER        UPPER        VALUE
 MASS REFLUX RATIO                    1.4000       2.3000       1.5877
 MASS DISTILLATE RATE      KG/HR      1030.0       1060.0       1051.7

 ****   DESIGN SPECIFICATIONS   ****

NO  SPEC-TYPE    QUALIFIERS            UNIT      SPECIFIED    CALCULATED
                                     VALUE        VALUE
 1  MASS-FRAC    STREAMS: R3                     0.98800      0.98799
            COMPS:   METHANOL

 ****   DESIGN SPECIFICATIONS   ****

NO  SPEC-TYPE    QUALIFIERS            UNIT      SPECIFIED    CALCULATED
                                     VALUE        VALUE
 2  TEMP         STAGE:   12          C          100.19       100.19

 ****   MAXIMUM FINAL RELATIVE ERRORS   ****

  DEW POINT                    0.56103E-05  STAGE=  7
  BUBBLE POINT                 0.77612E-04  STAGE=  7
  COMPONENT MASS BALANCE       0.95776E-05  STAGE=  1 COMP=WATER
  ENERGY BALANCE               0.62972E-04  STAGE=  1

 ****   PROFILES   ****

 **NOTE** REPORTED VALUES FOR STAGE LIQUID AND VAPOR RATES ARE THE FLOWS
       FROM THE STAGE INCLUDING ANY SIDE PRODUCT.

                              ENTHALPY
STAGE TEMPERATURE   PRESSURE          KJ/KMOL          HEAT DUTY
    C          BAR          LIQUID      VAPOR       KW

 1   64.637      1.0000     -0.23583E+06 -0.19985E+06   -844.8494
 2   65.108      1.0000     -0.23732E+06 -0.20035E+06
 3   65.833      1.0000     -0.23958E+06 -0.20110E+06
 7   74.788      1.0000     -0.26273E+06 -0.20963E+06
 8   78.879      1.0000     -0.26930E+06 -0.21343E+06
 9   90.628      1.0000     -0.27934E+06 -0.22612E+06
10   97.770      1.0000     -0.28126E+06 -0.23621E+06
11   99.446      1.0000     -0.28155E+06 -0.23891E+06
12   100.19      1.0000     -0.28791E+06 -0.23936E+06    424.3277

STAGE     FLOW RATE                FEED RATE              PRODUCT RATE
        KMOL/HR                  KMOL/HR                KMOL/HR
    LIQUID     VAPOR       LIQUID    VAPOR    MIXED      LIQUID    VAPOR
 1  85.74      0.000                              33.1278
 2  52.23      85.74
 3  51.66      85.35
 7  46.66      81.30
 8  45.41      79.79                40.9773
 9  45.69      37.56        0.7195
10  45.99      37.12
11  46.07      37.42
12  8.569      37.50                               8.5689

 ****  MASS FLOW PROFILES  ****

STAGE     FLOW RATE                FEED RATE              PRODUCT RATE
        KG/HR                    KG/HR                  KG/HR
    LIQUID     VAPOR       LIQUID    VAPOR    MIXED      LIQUID    VAPOR
 1  2722.      0.000                              1051.6524
 2  1635.      2722.
 3  1583.      2687.
 7  1110.      2312.
 8  988.2      2161.                1190.0120
 9  878.7      849.9        29.9495
10  849.8      710.4
11  845.1      681.5
12  168.3      676.8                              168.2978

                 ****   MOLE-X-PROFILE     ****
 STAGE     METHANOL      OIL          FAME         GLYCEROL      WATER
   1    0.97883       0.11790E-29   0.73141E-45   0.66368E-36   0.21168E-01
   2    0.94760       0.93267E-27   0.62959E-39   0.20928E-31   0.52403E-01
   3    0.90027       0.42991E-24   0.29847E-33   0.45255E-27   0.99727E-01
   7    0.41089       0.42986E-14   0.85617E-12   0.33845E-09   0.58911
   8    0.26712       0.61722E-12   0.48887E-07   0.89964E-05   0.73287
   9    0.64940E-01   0.24523E-10   0.82772E-04   0.37947E-02   0.93118
```

10	0.11114E-01	0.61938E-10	0.95710E-04	0.37701E-02	0.98502
11	0.18259E-02	0.34066E-11	0.82478E-04	0.37648E-02	0.99433
12	0.28586E-03	0.99202E-11	0.43972E-03	0.20231E-01	0.97904

**** MOLE-Y-PROFILE ****

STAGE	METHANOL	OIL	FAME	GLYCEROL	WATER
1	0.99145	0.14440E-32	0.79397E-51	0.22887E-40	0.85540E-02
2	0.97883	0.11790E-29	0.73141E-45	0.66368E-36	0.21168E-01
3	0.95972	0.57109E-27	0.38520E-39	0.12804E-31	0.40278E-01
7	0.74309	0.11902E-16	0.44674E-17	0.62783E-14	0.25691
8	0.64673	0.25136E-14	0.50064E-12	0.19791E-09	0.35327
9	0.32882	0.40454E-12	0.75007E-08	0.18598E-06	0.67118
10	0.79866E-01	0.27894E-10	0.36893E-06	0.29874E-06	0.92013
11	0.13594E-01	0.73851E-10	0.16928E-04	0.31975E-06	0.98639
12	0.21779E-02	0.19181E-11	0.84150E-06	0.18694E-05	0.99782

**** K-VALUES ****

STAGE	METHANOL	OIL	FAME	GLYCEROL	WATER
1	1.0129	0.12249E-02	0.10856E-05	0.34482E-04	0.40410
2	1.0330	0.12641E-02	0.11618E-05	0.31708E-04	0.40393
3	1.0660	0.13285E-02	0.12908E-05	0.28286E-04	0.40386
7	1.8087	0.27694E-02	0.52213E-05	0.18550E-04	0.43607
8	2.4214	0.40732E-02	0.10246E-04	0.22001E-04	0.48202
9	5.0638	0.16506E-01	0.90695E-04	0.49017E-04	0.72078
10	7.1861	0.45113	0.38616E-02	0.79241E-04	0.93413
11	7.4447	21.709	0.20554	0.84931E-04	0.99202
12	7.6186	0.19332	0.19134E-02	0.92404E-04	1.0192

**** MASS-X-PROFILE ****

STAGE	METHANOL	OIL	FAME	GLYCEROL	WATER
1	0.98799	0.32884E-28	0.68312E-44	0.19254E-35	0.12013E-01
2	0.96985	0.26379E-25	0.59625E-38	0.61562E-31	0.30154E-01
3	0.94137	0.12422E-22	0.28879E-32	0.13601E-26	0.58630E-01
7	0.55368	0.16007E-12	0.10675E-10	0.13108E-08	0.44632
8	0.39329	0.25112E-10	0.66603E-06	0.38071E-04	0.60668
9	0.10820	0.11291E-08	0.12762E-02	0.18173E-01	0.87235
10	0.19273E-01	0.29682E-08	0.15358E-02	0.18791E-01	0.96040
11	0.31897E-02	0.16445E-09	0.13332E-02	0.18902E-01	0.97657
12	0.46637E-03	0.44723E-09	0.66380E-02	0.94865E-01	0.89803

**** MASS-Y-PROFILE ****

STAGE	METHANOL	OIL	FAME	GLYCEROL	WATER
1	0.99517	0.40055E-31	0.73744E-50	0.66029E-40	0.48274E-02
2	0.98799	0.32884E-28	0.68312E-44	0.19254E-35	0.12013E-01
3	0.97695	0.16065E-25	0.36283E-38	0.37463E-31	0.23052E-01
7	0.83725	0.37057E-15	0.46576E-16	0.20332E-13	0.16275
8	0.76504	0.82167E-13	0.54800E-11	0.67287E-09	0.23496
9	0.46563	0.15830E-10	0.98283E-07	0.75695E-06	0.53437
10	0.13373	0.12907E-08	0.57164E-05	0.14377E-05	0.86626
11	0.23918E-01	0.35908E-08	0.27562E-03	0.16170E-05	0.97580
12	0.38670E-02	0.94115E-10	0.13826E-04	0.95403E-05	0.99611

****
***** COLUMN TARGETING RESULTS *****
****

*** THERMAL ANALYSIS ***

STAGE	TEMPERATURE C	PRESSURE BAR	ENTHALPY DEFICIT KW	CARNOT FACTOR KW
1	64.637	1.0000	844.85	0.11734
2	65.108	1.0000	518.37	0.11857
3	65.833	1.0000	411.49	0.12046
7	74.788	1.0000	257.02	0.14309
8	78.879	1.0000	188.97	0.15305
9	90.628	1.0000	416.19	0.18041
10	97.770	1.0000	425.23	0.19619
11	99.446	1.0000	426.21	0.19980
12	100.19	1.0000	424.33	0.20140

*** HYDRAULIC ANALYSIS ***

*** MOLE BASIS ***

STAGE	VAPOR TO IDEAL MINIMUM KMOL/HR	ACTUAL KMOL/HR	HYDRAULIC MAXIMUM KMOL/HR
1	0.0000	85.728	122.92
2	33.129	85.346	122.37

3	43.778	84.776	122.92
7	56.639	79.779	130.82
8	62.111	78.529	133.63
9	1.9294	37.115	150.00
10	1.1908	37.414	153.54
11	1.1179	37.494	154.06
12	0.0000	0.0000	0.0000

STAGE LIQUID FROM

	IDEAL MINIMUM KMOL/HR	ACTUAL KMOL/HR	HYDRAULIC MAXIMUM KMOL/HR
1	0.0000	85.736	122.92
2	0.92797E-02	52.226	74.869
3	10.659	51.657	74.885
7	23.520	46.660	76.499
8	28.991	45.409	77.256
9	10.505	45.691	184.62
10	9.7669	45.990	188.70
11	9.6940	46.070	189.26
12	0.0000	8.5689	35.205

*** MASS BASIS ***

STAGE VAPOR TO

	IDEAL MINIMUM KG/HR	ACTUAL KG/HR	HYDRAULIC MAXIMUM KG/HR
1	0.0000	2721.4	3902.0
2	1051.7	2686.4	3851.8
3	1378.0	2634.3	3819.6
7	1610.7	2161.0	3543.6
8	1682.4	2039.7	3470.9
9	43.657	710.22	2870.3
10	22.787	681.34	2796.0
11	20.358	676.63	2780.1
12	0.0000	0.0000	0.0000

STAGE LIQUID FROM

	IDEAL MINIMUM KG/HR	ACTUAL KG/HR	HYDRAULIC MAXIMUM KG/HR
1	0.0000	1669.8	3902.0
2	0.29052	1634.8	2343.9
3	326.62	1582.7	2294.7
7	559.27	1109.3	1819.0
8	630.93	988.04	1681.3
9	202.02	878.50	3550.4
10	180.46	849.62	3486.6
11	177.81	844.91	3471.6
12	0.0000	168.28	691.44

****
***** HYDRAULIC PARAMETERS *****
****

*** DEFINITIONS ***

MARANGONI INDEX = SIGMA - SIGMATO
FLOW PARAM = (ML/MV)*SQRT(RHOV/RHOL)
QR = QV*SQRT(RHOV/(RHOL-RHOV))
F FACTOR = QV*SQRT(RHOV)
WHERE:
SIGMA IS THE SURFACE TENSION OF LIQUID FROM THE STAGE
SIGMATO IS THE SURFACE TENSION OF LIQUID TO THE STAGE
ML IS THE MASS FLOW OF LIQUID FROM THE STAGE
MV IS THE MASS FLOW OF VAPOR TO THE STAGE
RHOL IS THE MASS DENSITY OF LIQUID FROM THE STAGE
RHOV IS THE MASS DENSITY OF VAPOR TO THE STAGE
QV IS THE VOLUMETRIC FLOW RATE OF VAPOR TO THE STAGE

TEMPERATURE
C

STAGE	LIQUID FROM	VAPOR TO
1	64.637	65.108
2	65.108	65.833
3	65.833	66.947
7	74.788	78.879
8	78.879	85.191
9	90.628	97.770
10	97.770	99.446

```
 11       99.446          100.19
 12       100.19          100.19


        MASS FLOW              VOLUME FLOW        MOLECULAR WEIGHT
         KG/HR                  CUM/HR
STAGE LIQUID FROM  VAPOR TO   LIQUID FROM  VAPOR TO   LIQUID FROM  VAPOR TO
  1  2721.4     2721.4     3.6854     2411.0     31.745     31.745
  2  1634.8     2686.4     2.2074     2405.4     31.307     31.477
  3  1582.7     2634.3     2.1270     2397.2     30.643     31.074
  7  1109.3     2161.0     1.3779     2335.1     23.779     27.087
  8  988.04     2039.7     1.1815     2339.7     21.763     25.974
  9  878.50     710.22    0.97652     1144.6     19.230     19.136
 10  849.62     681.34    0.92608     1159.0     18.477     18.211
 11  844.91     676.63    0.91787     1163.8     18.343     18.046
 12  168.28     0.0000    0.17999     0.0000     19.640

         DENSITY                VISCOSITY        SURFACE TENSION
         KG/CUM                  CP                DYNE/CM
STAGE LIQUID FROM  VAPOR TO    LIQUID FROM  VAPOR TO     LIQUID FROM
  1  738.43      1.1288     0.32791     0.11051E-01    19.855
  2  740.58      1.1168     0.32877     0.11094E-01    21.253
  3  744.07      1.0989     0.33002     0.11160E-01    23.364
  7  805.04     0.92545     0.33527     0.11807E-01    44.555
  8  836.27     0.87180     0.33035     0.12082E-01    50.367
  9  899.63     0.62049     0.30527     0.12555E-01    57.206
 10  917.44     0.58784     0.28453     0.12567E-01    58.179
 11  920.51     0.58137     0.27976     0.12584E-01    58.253
 12  934.93                 0.29151                    58.143

    MARANGONI INDEX   FLOW PARAM         QR         REDUCED F-FACTOR
STAGE    DYNE/CM                        CUM/HR       (GM-L)**.5/MIN
  1                 0.39097E-01      94.335          42692.
  2   1.3981        0.23631E-01      93.481          42367.
  3   2.1112        0.23088E-01      92.194          41883.
  7   7.1980        0.17405E-01      79.216          37439.
  8   5.8113        0.15640E-01      75.581          36409.
  9   6.8844        0.32485E-01      30.071          15027.
 10   0.97243        0.31565E-01      29.348          14811.
 11   0.74342E-01    0.31382E-01      29.258          14790.
 12   -.11022                         0.0000          0.0000

          ************************************
          ***** TRAY SIZING CALCULATIONS *****
          ************************************

  ********************
  *** SECTION   1 ***
  ********************

  STARTING STAGE NUMBER                          2
  ENDING STAGE NUMBER                           11
  FLOODING CALCULATION METHOD                        GLITSCH

  DESIGN PARAMETERS
  -----------------
  PEAK CAPACITY FACTOR                        1.00000
  SYSTEM FOAMING FACTOR                        1.00000
  FLOODING FACTOR                            0.80000
  MINIMUM COLUMN DIAMETER        METER                 0.30480
  MINIMUM DC AREA/COLUMN AREA                        0.100000
  HOLE AREA/ACTIVE AREA                       0.12000

  TRAY SPECIFICATIONS
  -------------------
  TRAY TYPE                                  SIEVE
  NUMBER OF PASSES                              1
  TRAY SPACING                 METER          0.60960


       ***** SIZING RESULTS @ STAGE WITH MAXIMUM DIAMETER *****

  STAGE WITH MAXIMUM DIAMETER                          2
  COLUMN DIAMETER              METER            0.63828
  DC AREA/COLUMN AREA                         0.100000
  DOWNCOMER VELOCITY           M/SEC            0.019163
  FLOW PATH LENGTH             METER            0.43853
  SIDE DOWNCOMER WIDTH         METER            0.099875
  SIDE WEIR LENGTH             METER            0.46378
```

```
CENTER DOWNCOMER WIDTH        METER                0.0
CENTER WEIR LENGTH            METER                0.0
OFF-CENTER DOWNCOMER WIDTH    METER                0.0
OFF-CENTER SHORT WEIR LENGTH  METER                0.0
OFF-CENTER LONG WEIR LENGTH   METER                0.0
TRAY CENTER TO OCDC CENTER    METER                0.0


              **** SIZING PROFILES ****

  STAGE   DIAMETER     TOTAL AREA   ACTIVE AREA   SIDE DC AREA
          METER        SQM          SQM           SQM
    2     0.63828      0.31997      0.25598       0.31997E-01
    3     0.63460      0.31629      0.25303       0.31629E-01
    4     0.62906      0.31080      0.24864       0.31080E-01
    5     0.62088      0.30277      0.24221       0.30277E-01
    6     0.60942      0.29169      0.23335       0.29169E-01
    7     0.59555      0.27856      0.22285       0.27856E-01
    8     0.58429      0.26813      0.21451       0.26813E-01
    9     0.37970      0.11323      0.90587E-01   0.11323E-01
   10     0.37673      0.11147      0.89174E-01   0.11147E-01
   11     0.37648      0.11132      0.89058E-01   0.11132E-01

        ************************************
        ***** TRAY RATING CALCULATIONS *****
        ************************************

*******************
*** SECTION   1 ***
*******************

STARTING STAGE NUMBER                    2
ENDING STAGE NUMBER                     11
FLOODING CALCULATION METHOD                 GLITSCH
PEAK CAPACITY FACTOR                 1.00000
SYSTEM FOAMING FACTOR                 1.00000
OVERALL TRAY EFFICIENCY               1.00000

TRAY SPECIFICATIONS
-------------------

              !            ! !
              !      A     ! !
              ! !----------------! AA
              ! !            !
              ! !    A       !
              !----------------! ! AA
              !            ! !
              !            ! !
               SINGLE CROSSFLOW TRAY


NUMBER OF PASSES                         1
DIAMETER                 METER        0.68749
TRAY SPACING             METER        0.60960
DECK THICKNESS           METER        0.0034036
TRAY TYPE                          SIEVE
HOLE AREA/ACTIVE AREA                 0.12000
HOLE DIAMETER            METER        0.012700

DOWNCOMER DIMENSIONS
--------------------
WEIR HEIGHT              METER        0.050800
DC CLEARANCE             METER        0.038100
TOP DC WIDTH             METER        0.10759

            ***** RATING RESULTS *****

DIAMETER                 METER        0.68749
STAGE-MAX FLOODING FACTOR                    2
FLOODING FACTOR                      0.69744
STAGE-MAX DC BACKUP/TRAY SPACE               2
DC BACKUP                METER        0.14333
DC BACKUP/TRAY SPACING               0.23512
STAGE-MAX DC VELOCITY                        2
DC VELOCITY              M/SEC        0.016514
STAGE-MAX WEIRLOADING                2 (PANEL A)
WEIR LOADING             SQM/HR       4.41878
SECTION PRESSURE DROP    BAR          0.052851
```

```
  MAX APPROACH TO SYSTEM LIMIT                    0.49047
  STAGE-MAX SYSTEM LIMIT                     2

                    **** RATING PROFILES ****

     FLOODING                        DC BACKUP/
STAGE FACTOR      DC VELOCITY  DC BACKUP    TRAY SPACE  PRES. DROP
              M/SEC       METER                 BAR
 2   0.6974     0.1651E-01  0.1433       0.2351     0.6138E-02
 3   0.6897     0.1591E-01  0.1418       0.2325     0.6068E-02
 4   0.6781     0.1503E-01  0.1395       0.2288     0.5969E-02
 5   0.6612     0.1378E-01  0.1362       0.2234     0.5840E-02
 6   0.6377     0.1213E-01  0.1319       0.2164     0.5693E-02
 7   0.6098     0.1031E-01  0.1271       0.2085     0.5570E-02
 8   0.5877     0.8839E-02  0.1233       0.2023     0.5521E-02
 9   0.2474     0.7306E-02  0.1004       0.1647     0.3978E-02
10   0.2437     0.6928E-02  0.1000       0.1640     0.4032E-02
11   0.2434     0.6867E-02  0.9993E-01   0.1639     0.4042E-02

BLOCK:  T102     MODEL: RADFRAC (CONTINUED)

 ***NQ-CURVE RESULTS***

      --- RESULTS FOR EACH CURVE ---

NQ-CURVE NO.  1,     BASE FEED STREAM: S10
CASE      TOTAL      FEED       OBJECTIVE
NO.       STAGES     STAGE      FUNCTION
                     KW
 1        11         8          1507.7
 2        12         9          1268.7

CASE CONDENSER     REBOILER      REFLUX    REFLUX    REFLUX
NO.  DUTY          DUTY          RATIO     RATIO     RATIO
                                 MASS      STDVOL.
    KW             KW
 1  -964.12        543.59        1.9531    1.9531    1.9531
 2  -844.60        424.06        1.5876    1.5876    1.5876

      --- OPTIMUM RESULTS ---

CURVE TOTAL  FEED  FEED    CONDENSER    REBOILER      REFLUX     OBJECTIVE
ID.   STAGES STAGE STREAM  DUTY         DUTY          RATIO      FUNCTION
                   KW      KW                         KW
 1    12     9    S10     -844.60      424.06        1.59       1268.7

      --- STREAM CONNECTIONS FOR EACH CURVE ---

ALL FEED LOCATIONS

NQ-CURVE NO.  1,     BASE FEED STREAM: S10
CASE NO.  S10
     1      8
     2      9

ALL PRODUCT LOCATIONS

NQ-CURVE NO.  1,     BASE FEED STREAM: S10
CASE NO.  R3       WATEROUT
     1      1       11
     2      1       12

      --- STREAM CONNECTIONS FOR OPTIMUM CASE ---

ALL FEED LOCATIONS
FEEDS              STAGE
S10                9

ALL PRODUCT LOCATIONS
PRODUCTS           STAGE
R3                 1
WATEROUT           12

      --- DETAILED TPLVQ RESULTS ---

NQ-CURVE NO.  1,     BASE FEED STREAM: S10
STAGE TEMPERATURE   PRESSURE    LIQUID FLOW  VAPOR FLOW     HEAT DUTY
     C              BAR         KMOL/HR      KMOL/HR        KW
```

1	64.637	1.0000	52.593	0.0000	-844.60
2	65.107	1.0000	52.212	85.703	0.0000
3	65.831	1.0000	51.650	85.322	0.0000
4	66.944	1.0000	50.847	84.760	0.0000
5	68.649	1.0000	49.741	83.957	0.0000
6	71.207	1.0000	48.333	82.851	0.0000
7	74.781	1.0000	46.885	81.443	0.0000
8	78.874	1.0000	44.712	79.995	0.0000
9	90.624	1.0000	45.577	36.845	0.0000
10	97.769	1.0000	45.983	36.990	0.0000
11	99.446	1.0000	46.040	37.396	0.0000
12	100.19	1.0000	8.5689	37.471	424.06

MASS BASED FLOW INFO

NQ-CURVE NO. 1, BASE FEED STREAM: S10

STAGE	LIQUID FLOW KG/HR	VAPOR FLOW KG/HR
1	1669.6	0.0000
2	1634.7	2720.7
3	1582.9	2685.8
4	1508.0	2634.0
5	1403.7	2559.1
6	1269.4	2454.9
7	1123.8	2320.9
8	962.48	2176.4
9	871.82	824.63
10	848.97	703.14
11	844.37	680.34

NQ-CURVE NO. 1, BASE FEED STREAM: S10

STAGE	LIQUID FLOW KG/HR	VAPOR FLOW KG/HR
12	168.29	676.08

STDVOL BASED FLOW INFO

NQ-CURVE NO. 1, BASE FEED STREAM: S10

STAGE	LIQUID FLOW KG/HR	VAPOR FLOW KG/HR
1	2.0965	0.0000
2	2.0451	3.4164
3	1.9687	3.3649
4	1.8582	3.2886
5	1.7043	3.1781
6	1.5058	3.0243
7	1.2898	2.8263
8	1.0564	2.6120
9	0.89189	0.92060
10	0.85123	0.72607
11	0.84347	0.68539
12	0.16549	0.67798

---DETAILED COMPOSITION RESULTS FOR GLOBAL OPTIMUM---

NQ-CURVE NO. 1, BASE FEED STREAM: S10

**** MOLE-X-PROFILE ****

STAGE	METHANOL	OIL	FAME	GLYCEROL
1	0.97886	0.0000	0.0000	0.0000
2	0.94767	0.0000	0.0000	0.0000
3	0.90046	0.0000	0.0000	0.0000
4	0.82993	0.0000	0.0000	0.0000
5	0.72753	0.0000	0.0000	0.0000
6	0.58803	0.0000	0.0000	0.10909E-13
7	0.42447	0.34285E-13	0.11734E-11	0.34030E-09
8	0.25023	0.40549E-11	0.55190E-07	0.93536E-05
9	0.57457E-01	0.16155E-09	0.84532E-04	0.38340E-02
10	0.97925E-02	0.12449E-09	0.10996E-03	0.37743E-02
11	0.16206E-02	0.34294E-11	0.82516E-04	0.37661E-02
12	0.25374E-03	0.99193E-11	0.43968E-03	0.20229E-01

STAGE	WATER
1	0.21137E-01
2	0.52327E-01
3	0.99537E-01
4	0.17007
5	0.27247
6	0.41197

```
   7   0.57553
   8   0.74976
   9   0.93862
  10   0.98632

STAGE     WATER
  11   0.99453
  12   0.97908
      ****   MOLE-Y-PROFILE     ****

STAGE     METHANOL     OIL          FAME         GLYCEROL
   1   0.99146       0.0000       0.0000       0.0000
   2   0.97886       0.0000       0.0000       0.0000
   3   0.95978       0.0000       0.0000       0.0000
   4   0.93110       0.0000       0.0000       0.0000
   5   0.88870       0.0000       0.0000       0.0000
   6   0.82806       0.0000       0.0000       0.0000
   7   0.74726       0.0000       0.0000       0.64642E-14
   8   0.65524       0.20014E-13   0.68499E-12   0.19865E-09
   9   0.31123       0.45853E-11   0.13180E-07   0.19445E-06
  10   0.70832E-01   0.19700E-09   0.14895E-05   0.29905E-06
  11   0.11980E-01   0.15076E-09   0.34344E-04   0.31721E-06
  12   0.19331E-02   0.19456E-11   0.85353E-06   0.18690E-05

STAGE     WATER
   1   0.85417E-02
   2   0.21137E-01
   3   0.40218E-01
   4   0.68896E-01
   5   0.11130
   6   0.17194
   7   0.25274
   8   0.34476
   9   0.68877
  10   0.92917
  11   0.98799
  12   0.99806

NQ-CURVE NO.  1,     BASE FEED STREAM: S10
      ****   MASS-X-PROFILE     ****

STAGE     METHANOL     OIL          FAME         GLYCEROL
   1   0.98800       0.0000       0.0000       0.0000
   2   0.96989       0.0000       0.0000       0.0000
   3   0.94149       0.0000       0.0000       0.0000
   4   0.89669       0.0000       0.0000       0.0000
   5   0.82606       0.0000       0.0000       0.0000
   6   0.71741       0.0000       0.0000       0.38252E-13
   7   0.56743       0.12665E-11   0.14515E-10   0.13075E-08
   8   0.37248       0.16679E-09   0.76017E-06   0.40018E-04
   9   0.96244E-01   0.74779E-08   0.13102E-02   0.18458E-01

STAGE     METHANOL     OIL          FAME         GLYCEROL
  10   0.16995E-01   0.59701E-08   0.17659E-02   0.18827E-01
  11   0.28313E-02   0.16557E-09   0.13340E-02   0.18912E-01
  12   0.41397E-03   0.44721E-09   0.66376E-02   0.94859E-01

STAGE     WATER
   1   0.11995E-01
   2   0.30110E-01
   3   0.58513E-01
   4   0.10331
   5   0.17394
   6   0.28259
   7   0.43257
   8   0.62748
   9   0.88399
  10   0.96241
  11   0.97692
  12   0.89809

      ****   MASS-Y-PROFILE     ****

STAGE     METHANOL     OIL          FAME         GLYCEROL
   1   0.99518       0.0000       0.0000       0.0000
   2   0.98800       0.0000       0.0000       0.0000
   3   0.97698       0.0000       0.0000       0.0000
   4   0.96006       0.0000       0.0000       0.0000
   5   0.93422       0.0000       0.0000       0.0000
```

```
   6   0.89546       0.0000       0.0000       0.0000
   7   0.84022       0.0000       0.0000       0.20891E-13
   8   0.77171       0.65136E-12  0.74651E-11  0.67244E-09
   9   0.44559       0.18141E-09  0.17460E-06  0.80015E-06
  10   0.11939       0.91764E-08  0.23232E-04  0.14488E-05
  11   0.21100E-01   0.73376E-08  0.55971E-03  0.16058E-05
  12   0.34330E-02   0.95479E-10  0.14026E-04  0.95396E-05

STAGE    WATER
   1   0.48205E-02
   2   0.11995E-01
   3   0.23017E-01
   4   0.39940E-01
   5   0.65782E-01
   6   0.10454
   7   0.15978
   8   0.22829

STAGE    WATER
   9   0.55441
  10   0.88058
  11   0.97834
  12   0.99654

NQ-CURVE NO.  1,    BASE FEED STREAM: S10
      ****   STDVOL-X-PROFILE   ****

STAGE    METHANOL     OIL          FAME         GLYCEROL
   1   0.99043       0.0000       0.0000       0.0000
   2   0.97589       0.0000       0.0000       0.0000
   3   0.95286       0.0000       0.0000       0.0000
   4   0.91600       0.0000       0.0000       0.0000
   5   0.85646       0.0000       0.0000       0.0000
   6   0.76131       0.0000       0.0000       0.25632E-13
   7   0.62237       0.12139E-11  0.14533E-10  0.90554E-09
   8   0.42718       0.16716E-09  0.79586E-06  0.28980E-04
   9   0.11843       0.80406E-08  0.14717E-02  0.14342E-01
  10   0.21336E-01   0.65498E-08  0.20239E-02  0.14925E-01
  11   0.35679E-02   0.18232E-09  0.15346E-02  0.15048E-01
  12   0.52992E-03   0.50025E-09  0.77565E-02  0.76676E-01

STAGE    WATER
   1   0.95709E-02
   2   0.24114E-01
   3   0.47136E-01
   4   0.84000E-01
   5   0.14354
   6   0.23869
   7   0.37763
   8   0.57279
   9   0.86576
  10   0.96171
  11   0.97985
  12   0.91504
      ****   STDVOL-Y-PROFILE   ****

STAGE    METHANOL     OIL          FAME         GLYCEROL
   1   0.99616       0.0000       0.0000       0.0000
   2   0.99043       0.0000       0.0000       0.0000
   3   0.98159       0.0000       0.0000       0.0000
   4   0.96795       0.0000       0.0000       0.0000
   5   0.94693       0.0000       0.0000       0.0000
   6   0.91498       0.0000       0.0000       0.0000
   7   0.86854       0.0000       0.0000       0.13636E-13

STAGE    METHANOL     OIL          FAME         GLYCEROL
   8   0.80941       0.59700E-12  0.71477E-11  0.44536E-09
   9   0.50243       0.17875E-09  0.17973E-06  0.56970E-06
  10   0.14555       0.97754E-08  0.25854E-04  0.11153E-05
  11   0.26365E-01   0.80118E-08  0.63844E-03  0.12670E-05
  12   0.43093E-02   0.10473E-09  0.16073E-04  0.75614E-05

STAGE    WATER
   1   0.38406E-02
   2   0.95709E-02
   3   0.18407E-01
   4   0.32051E-01
   5   0.53071E-01
   6   0.85020E-01
```

7	0.13146
8	0.19059
9	0.49757
10	0.85442
11	0.97300
12	0.99567

APPENDIX C: Rate-Based Distillation

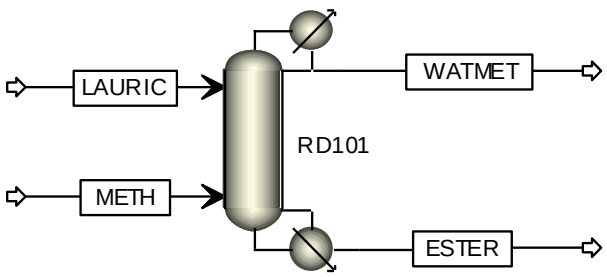

Fig. C-1. Reactive distillation in the esterification of lauric acid with methanol.

Table C-1. Input summary of rate-based design 2 (Fig. C-1).

```
Input Summary created by Aspen Plus Rel. 25.0 at 13:42:18 Mon Feb 27, 2012

COMPONENTS
   WATER H2O /
   METHANOL CH4O /
   DODECAN C12H24O2 /
   METESTER C13H26O2

FLOWSHEET
   BLOCK M101 IN=METH OUT=S2A
   BLOCK RD101 IN=S2B S1 OUT=WATMET ESTER
   BLOCK HT101 IN=LAURIC OUT=S1
   BLOCK HT102 IN=S2A OUT=S2B

PROPERTIES UNIQUAC

ESTIMATE ALL
   UNIQ ALL ALL UNIFAC

STREAM LAURIC
   SUBSTREAM MIXED TEMP=25. PRES=1.
   MOLE-FLOW DODECAN 100.

STREAM METH
   SUBSTREAM MIXED TEMP=25. PRES=1.
   MOLE-FLOW WATER 1. / METHANOL 199.

BLOCK M101 MIXER
   PARAM T-EST=90.

BLOCK HT101 HEATER
   PARAM TEMP=100. PRES=12.5

BLOCK HT102 HEATER
   PARAM TEMP=110. PRES=13.

BLOCK RD101 RADFRAC
   IN-UNITS ENG
   PARAM NSTAGE=35
   COL-CONFIG CONDENSER=TOTAL
   RATESEP-ENAB CALC-MODE=RIG-RATE
   FEEDS S2B 34 / S1 3
   PRODUCTS WATMET 1 L / ESTER 35 L
   P-SPEC 3 12.5 <bar> / 34 13. <bar>
   COL-SPECS MOLE-D=196. <kmol/hr> MOLE-RR=0.7
   HEATERS 3 1200. <kW>
   REAC-STAGES 3 34 R-1
   HOLD-UP 3 34 VOL-LHLDP=0.043 <cum>
   T-EST 1 155. <C> / 2 164. <C> / 3 173. <C> / 5  &
      171.5 <C> / 10 164.7 <C> / 15 158.6 <C> / 20  &
      155.9 <C> / 25 155.3 <C> / 30 155.1 <C> / 34  &
      170.4 <C> / 35 297.4 <C>
   TRAY-SIZE 1 2 34 SIEVE
   TRAY-RATE 1 2 34 SIEVE DIAM=0.9 <meter> P-UPDATE=NO
   TRAY-RATE2 1 RATE-BASED=YES LIQ-CORRF=YES VAP-CORRF=YES  &
      MTRFC-CORR=CHENCHUANG93 INTFA-CORR=ZUIDERWEG-82  &
      HOLDUP-CORR=BENNETT-83
   REPORT TARGET HYDANAL

EO-CONV-OPTI

STREAM-REPOR MOLEFLOW MASSFLOW MOLEFRAC MASSFRAC

PROPERTY-REP PCES
REACTIONS R-1 REAC-DIST
   REAC-DATA 1 KINETIC
   RATE-CON 1 PRE-EXP=120000. ACT-ENERGY=55000. <kJ/kmol>
   STOIC 1 METHANOL -1. / DODECAN -1. / WATER 1. /  &
      METESTER 1.
   POWLAW-EXP 1 METHANOL 1. / DODECAN 1. / WATER 0. /  &
      METESTER 0.
```

Table C-2. Column RD101 results summary of the rate-based design 2 (Fig. C-1).

```
BLOCK:  RD101    MODEL: RADFRAC
 -------------------------------
  INLETS   - S2B      STAGE  34
           S1       STAGE   3
  OUTLETS  - WATMET   STAGE   1
           ESTER    STAGE  35
  PROPERTY OPTION SET:   UNIQUAC   UNIQUAC / IDEAL GAS

                 ***  MASS AND ENERGY BALANCE  ***
                      IN         OUT       GENERATION   RELATIVE DIFF.
  TOTAL BALANCE
  MOLE(KMOL/HR )        300.000      300.000     -0.374700E-13 -0.189478E-15
  MASS(KG/HR   )        26426.5      26426.5                -0.137664E-15
  ENTHALPY(GCAL/HR )    -27.7632     -24.8254                -0.105819

                 **********************
                 ****  INPUT DATA  ****
                 **********************

  ****   INPUT PARAMETERS   ****

   CALCULATION MODE                              RIGOROUS RATE-BASED
   NUMBER OF STAGES                              35
   TOTAL NUMBER OF RATE-BASED STAGES                    33
   TOTAL NUMBER OF EQUILIBRIUM STAGES                    2
   MAXIMUM NUMBER OF FLASH ITERATIONS                   30
   FLASH TOLERANCE                               0.000100000
   HYDRAULIC PARAMETER CALCULATIONS                     NO
   DESIGN SPECIFICATION METHOD                       NESTED

   EQUILIBRIUM (INITIALIZATION) PARAMETERS
   ---------------------------------------
   ALGORITHM OPTION                              STANDARD
   INITIALIZATION OPTION                          STANDARD
   INSIDE LOOP CONVERGENCE METHOD                     NEWTON
   MAXIMUM NO. OF OUTSIDE LOOP ITERATIONS                25
   MAXIMUM NO. OF INSIDE LOOP ITERATIONS                 10
   OUTSIDE LOOP CONVERGENCE TOLERANCE                     0.000100000

   RATE-BASED PARAMETERS
   ---------------------
   RATESEP CONVERGENCE TOLERANCE                      0.100000-04
   MAXIMUM NUMBER OF RATESEP ITERATIONS                   25
   CHILTON-COLBURN AVERAGING PARAMETER                     0.000100000

  ****   COL-SPECS   ****

   MOLAR VAPOR DIST / TOTAL DIST                        0.0
   MOLAR REFLUX RATIO                              0.70000
   MOLAR DISTILLATE RATE         KMOL/HR               196.000

  **** REAC-STAGES SPECIFICATIONS ****

   STAGE  TO  STAGE          REACTIONS/CHEMISTRY ID
     3        34                  R-1

  **** HOLD-UP SPECIFICATIONS ****

   STAGE  TO  STAGE    LIQUID HOLDUP       VAPOR HOLDUP
     3        34       4.3000-02 CUM         MISSING

     *****  REACTION PARAGRAPH R-1     *****

      ****  REACTION PARAMETERS  ****

  RXN NO. TYPE        PHASE      CONC.    TEMP APP TO EQUIL    CONVERSION
                      BASIS        C
    1   KINETIC      LIQUID     MOLAR

     **  STOICHIOMETRIC COEFFICIENTS  **

  RXN NO.    WATER        METHANOL     DODECAN      METESTER
    1       1.000       -1.000       -1.000        1.000

     **  COEFFICIENTS IN GENERAL POWER LAW EXPRESSION  **

  RXN NO.  PRE-EXPONENTIAL     ACTIVATION       TEMPERATURE
```

```
          FACTOR          ENERGY          EXPONENT
                        KCAL/MOL
  1    0.12000E+06        13.137           0.0000

    **  COMPONENT EXPONENTS IN GENERAL POWER LAW EXPRESSION  **

 RXN NO.   WATER       METHANOL     DODECAN      METESTER
   1      0.000       1.000       1.000       0.000

****    HEATERS    ****

 STAGE HEATERS   STAGE   3  RATE, GCAL/HR              1.03181

****    PROFILES   ****

 P-SPEC        STAGE   3  PRES, BAR                 12.5000
               34                        13.0000

 TEMP-EST       STAGE   1  TEMP, C                  155.000
               2                        164.000
               3                        173.000
               5                        171.500
              10                        164.700
              15                        158.600
              20                        155.900
              25                        155.300
              30                        155.100
              34                        170.400
              35                        297.400

             ********************
             ****  RESULTS  ****
             ********************

***   COMPONENT SPLIT FRACTIONS   ***

                    OUTLET STREAMS
                    ---------------
            WATMET       ESTER
 COMPONENT:
 WATER      .99984      .15597E-03
 METHANOL   .95688      .43118E-01
 DODECAN    .17799      .82201
 METESTER   .25155E-02  .99748

***    SUMMARY OF KEY RESULTS    ***

 TOP STAGE LIQ. TEMPERATURE     C                    155.394
 TOP STAGE VAP. TEMPERATURE     C                    155.394
 BOTTOM STAGE LIQ. TEMPERATURE  C                    297.392
 BOTTOM STAGE VAP. TEMPERATURE  C                    297.392
 TOP STAGE LIQUID FLOW          KMOL/HR              333.200
 BOTTOM STAGE LIQUID FLOW       KMOL/HR              104.000
 TOP STAGE VAPOR FLOW           KMOL/HR              0.0
 BOILUP VAPOR FLOW              KMOL/HR              262.448
 MOLAR REFLUX RATIO                                  0.70000
 MOLAR BOILUP RATIO                                  2.52354
 CONDENSER DUTY (W/O SUBCOOL)   GCAL/HR              -2.68856
 REBOILER DUTY                  GCAL/HR              4.59463

****    PROFILES   ****

STAGE     TEMPERATURE          PRESSURE         ENTHALPY          HEAT DUTY
            C                  BAR              KCAL/MOL          GCAL/HR
    LIQUID       VAPOR                   LIQUID       VAPOR

 1   155.39      155.39      12.500      -59.794     -49.357       -2.6885
 2   164.11      168.16      12.500      -61.809     -51.725
 3   172.98      171.88      12.500      -102.73     -52.432        1.0318
 4   172.43      170.99      12.516      -102.30     -52.223
28   155.30      155.50      12.903      -90.805     -46.768
29   155.44      155.95      12.919      -90.871     -46.751
30   155.80      157.08      12.935      -91.197     -46.759
33   167.57      184.15      12.984      -100.40     -47.513
34   170.42      216.08      13.000      -87.695     -49.045
35   297.39      297.39      13.000      -126.02     -55.003        4.5946

STAGE     FLOW RATE                FEED RATE              PRODUCT RATE
        KMOL/HR                  KMOL/HR                KMOL/HR
```

	LIQUID	VAPOR	LIQUID	VAPOR	MIXED	LIQUID	VAPOR
1	333.2	0.000			196.0000		
2	132.8	333.2					
3	233.2	328.8	100.0000				
4	233.4	329.2					
28	255.4	351.2					
29	255.1	351.4					
30	253.6	351.1					
33	223.4	336.2					
34	366.4	319.4	200.0000				
35	104.0	262.4			104.0000		

**** MASS FLOW PROFILES ****

STAGE	FLOW RATE KG/HR		FEED RATE KG/HR		PRODUCT RATE KG/HR		
	LIQUID	VAPOR	LIQUID	VAPOR	MIXED	LIQUID	VAPOR
1	8365.	0.000			4920.4289		
2	3000.	8365.					
3	0.2317E+05	7921.	.20032+05				
4	0.2332E+05	8055.					
28	0.2641E+05	0.1127E+05					
29	0.2644E+05	0.1130E+05					
30	0.2649E+05	0.1133E+05					
33	0.2766E+05	0.1170E+05					
34	0.3668E+05	0.1255E+05	6394.4051				
35	0.2151E+05	0.1517E+05			.21506+05		

**** MOLE-X-PROFILE ****

STAGE	WATER	METHANOL	DODECAN	METESTER
1	0.51396	0.48453	0.22536E-03	0.12803E-02
2	0.69327	0.30523	0.54273E-03	0.95388E-03
3	0.41682	0.15302	0.37465	0.55506E-01
4	0.42162	0.14840	0.32937	0.10061
28	0.12343E-01	0.59498	0.36088E-02	0.38907
29	0.10051E-01	0.59608	0.28973E-02	0.39097
30	0.82169E-02	0.59394	0.23396E-02	0.39550
33	0.40907E-02	0.49190	0.14815E-02	0.50253
34	0.36441E-02	0.62278	0.81665E-03	0.37276
35	0.15110E-03	0.41148E-01	0.19615E-02	0.95674

**** MOLE-Y-PROFILE ****

STAGE	WATER	METHANOL	DODECAN	METESTER
1	0.27613	0.72317	0.19290E-05	0.69629E-03
2	0.51396	0.48453	0.22536E-03	0.12803E-02
3	0.58640	0.41210	0.35357E-03	0.11484E-02
4	0.56272	0.43548	0.28584E-03	0.15124E-02
28	0.16561E-01	0.98199	0.10834E-05	0.14428E-02
29	0.13813E-01	0.98454	0.13137E-05	0.16412E-02
30	0.11628E-01	0.98622	0.22236E-05	0.21479E-02
33	0.73026E-02	0.97698	0.33139E-04	0.15686E-01
34	0.62451E-02	0.95343	0.95363E-04	0.40229E-01
35	0.50283E-02	0.85326	0.36298E-03	0.14134

**** K-VALUES ****

STAGE	WATER	METHANOL	DODECAN	METESTER
1	0.53726	1.4925	0.85597E-02	0.54387
2	0.58771	2.5201	0.22516	17.591
3	1.9473	1.8751	0.10487E-02	0.10097E-01
4	2.0343	1.8870	0.96109E-03	0.93875E-02
28	2.1214	1.6395	0.27256E-03	0.33947E-02
29	2.1480	1.6528	0.27732E-03	0.33846E-02
30	2.2141	1.6871	0.29108E-03	0.33773E-02
33	4.1552	2.7583	0.10855E-02	0.49059E-02
34	5.2940	3.4040	0.19520E-02	0.65401E-02
35	33.277	20.737	0.18505	0.14774

**** MASS-X-PROFILE ****

STAGE	WATER	METHANOL	DODECAN	METESTER
1	0.36883	0.61844	0.17983E-02	0.10931E-01
2	0.55305	0.43309	0.48142E-02	0.90538E-02
3	0.75574E-01	0.49346E-01	0.75534	0.11974
4	0.76035E-01	0.47601E-01	0.66048	0.21589
28	0.21504E-02	0.18437	0.69911E-02	0.80649
29	0.17467E-02	0.18425	0.55988E-02	0.80841
30	0.14176E-02	0.18225	0.44882E-02	0.81184
33	0.59504E-03	0.12726	0.23963E-02	0.86974
34	0.65595E-03	0.19938	0.16346E-02	0.79833
35	0.13164E-04	0.63759E-02	0.19002E-02	0.99171

```
                    ****   MASS-Y-PROFILE     ****
 STAGE     WATER         METHANOL      DODECAN       METESTER
   1    0.17580       0.81891       0.13656E-04   0.52745E-02
   2    0.36883       0.61844       0.17983E-02   0.10931E-01
   3    0.43861       0.54823       0.29407E-02   0.10220E-01
   4    0.41424       0.57017       0.23397E-02   0.13247E-01
  28    0.93025E-02   0.98105       0.67666E-05   0.96425E-02
  29    0.77406E-02   0.98131       0.81859E-05   0.10943E-01
  30    0.64914E-02   0.97923       0.13803E-04   0.14267E-01
  33    0.37799E-02   0.89943       0.19073E-03   0.96600E-01
  34    0.28624E-02   0.77726       0.48603E-03   0.21939
  35    0.15672E-02   0.47301       0.12580E-02   0.52416

     ****   TOTAL LIQUID REACTION RATES, KMOL/HR        ****

 STAGE     WATER         METHANOL      DODECAN       METESTER
   1     0.0000        0.0000        0.0000        0.0000
   2     0.0000        0.0000        0.0000        0.0000
   3     12.695       -12.695       -12.695        12.695
   4     10.460       -10.460       -10.460        10.460
  28    0.22784       -0.22784       -0.22784       0.22784
  29    0.18294       -0.18294       -0.18294       0.18294
  30    0.14649       -0.14649       -0.14649       0.14649
  33    0.80343E-01  -0.80343E-01  -0.80343E-01   0.80343E-01
  34    0.96480E-01  -0.96480E-01  -0.96480E-01   0.96480E-01
  35     0.0000        0.0000        0.0000        0.0000

     ****   KINETIC REACTION HOLDUPS    ****

 STAGE    LIQUID HOLDUP    UNITS        VAPOR HOLDUP    UNITS
   1     0.000                         0.000
   2     0.000                         0.000
   3     0.2080E-01       CUM          0.000
   4     0.2076E-01       CUM          0.000
  28     0.1966E-01       CUM          0.000
  29     0.1965E-01       CUM          0.000
  30     0.1964E-01       CUM          0.000
  33     0.1968E-01       CUM          0.000
  34     0.2146E-01       CUM          0.000
  35     0.000                         0.000

     ****  FILM KINETIC REACTION HOLDUPS   ****

 STAGE    LIQUID HOLDUP    UNITS        VAPOR HOLDUP    UNITS
   1     0.000                         0.000
   2     0.000                         0.000
   3     0.3236E-02       CUM          0.000
   4     0.3160E-02       CUM          0.000
  28     0.4333E-02       CUM          0.000
  29     0.4343E-02       CUM          0.000
  30     0.4363E-02       CUM          0.000
  33     0.5074E-02       CUM          0.000
  34     0.6950E-02       CUM          0.000

            ************************************
            ***** COLUMN TARGETING RESULTS *****
            ************************************
  *** THERMAL ANALYSIS ***

STAGE TEMPERATURE   PRESSURE   ENTHALPY DEFICIT   EXERGY LOSS   CARNOT FACTOR
    C            BAR            GCAL/HR        GCAL/HR
  1  155.39       12.500        2.6886         0.25543E-01   0.30427
  2  164.11       12.500        1.1071         -9.4218       0.31814
  3  172.98       12.500        1.1122         0.13249       0.33170
  4  172.43       12.516        1.1265         0.16193E-01   0.33086
 28  155.30       12.903        1.0454         0.65224E-03   0.30412
 29  155.44       12.919        1.0492         0.55036E-03   0.30435
 30  155.80       12.935        1.0626         0.58718E-03   0.30493
 33  167.57       12.984        1.3936         0.20463E-01   0.32350
 34  170.42       13.000        2.5542         0.15491       0.32785
 35  297.39       13.000        5.6264         0.38178       0.47743

  *** HYDRAULIC ANALYSIS ***

     *** MOLE BASIS ***

STAGE                VAPOR TO
    IDEAL MINIMUM        ACTUAL        HYDRAULIC MAXIMUM
```

```
      KMOL/HR          KMOL/HR          KMOL/HR
  1   0.0000          333.20           754.63
  2   196.00          328.85           744.77
  3   328.93          329.16           649.89
  4   329.26          329.40           644.90
 28   351.20          351.38           578.33
 29   350.61          351.06           576.90
 30   348.50          349.65           573.56
 33   303.28          319.37           508.47
 34   182.60          262.45           374.21
 35   0.0000          0.0000           0.0000

STAGE                LIQUID FROM
     IDEAL MINIMUM       ACTUAL       HYDRAULIC MAXIMUM
      KMOL/HR          KMOL/HR          KMOL/HR
  1   0.0000          333.20           754.63
  2  0.81584E-13       132.85           300.87
  3   232.93          233.16           460.35
  4   233.26          233.40           456.96
 28   255.20          255.38           420.33
 29   254.61          255.06           419.14
 30   252.50          253.65           416.08
 33   207.28          223.37           355.63
 34   286.60          366.45           522.50
 35   0.0000          104.00           148.29

       *** MASS BASIS ***

STAGE                VAPOR TO
     IDEAL MINIMUM       ACTUAL       HYDRAULIC MAXIMUM
      KG/HR            KG/HR            KG/HR
  1   0.0000          8364.7           18944.
  2   4920.4          7920.6           17938.
  3   7922.6          8055.5           15905.
  4   8057.9          8204.6           16063.
 28   11264.          11296.           18592.
 29   11271.          11329.           18617.
 30   11246.          11375.           18659.
 33   10556.          12553.           19985.
 34   7177.2          15170.           21630.
 35   0.0000          0.0000           0.0000

STAGE                LIQUID FROM
     IDEAL MINIMUM       ACTUAL       HYDRAULIC MAXIMUM
      KG/HR            KG/HR            KG/HR
  1   0.0000          8364.7           18944.
  2  0.18424E-11       3000.1           6794.7
  3   23145.          23167.           45741.
  4   23302.          23316.           45648.
 28   26389.          26408.           43464.
 29   26394.          26441.           43450.
 30   26367.          26487.           43448.
 33   25671.          27665.           44044.
 34   28685.          36676.           52294.
 35   0.0000          21506.           30665.

              *********************************
              ***** HYDRAULIC PARAMETERS *****
              *********************************

    *** DEFINITIONS ***

     MARANGONI INDEX = SIGMA - SIGMATO
     FLOW PARAM = (ML/MV)*SQRT(RHOV/RHOL)
     QR = QV*SQRT(RHOV/(RHOL-RHOV))
     F FACTOR = QV*SQRT(RHOV)
       WHERE:
       SIGMA IS THE SURFACE TENSION OF LIQUID FROM THE STAGE
       SIGMATO IS THE SURFACE TENSION OF LIQUID TO THE STAGE
       ML IS THE MASS FLOW OF LIQUID FROM THE STAGE
       MV IS THE MASS FLOW OF VAPOR TO THE STAGE
       RHOL IS THE MASS DENSITY OF LIQUID FROM THE STAGE
       RHOV IS THE MASS DENSITY OF VAPOR TO THE STAGE
       QV IS THE VOLUMETRIC FLOW RATE OF VAPOR TO THE STAGE

                TEMPERATURE
                   C
STAGE      LIQUID FROM       VAPOR TO
  1        155.39           168.16
```

```
  2       164.11          171.88
  3       172.98          170.99
  4       172.43          169.89
 28       155.30          155.95
 29       155.44          157.08
 30       155.80          159.99
 33       167.57          216.08
 34       170.42          297.39
 35       297.39          297.39

          MASS FLOW              VOLUME FLOW        MOLECULAR WEIGHT
          KG/HR                  CUM/HR
STAGE LIQUID FROM  VAPOR TO   LIQUID FROM  VAPOR TO   LIQUID FROM  VAPOR TO
  1  8364.7     8364.7     12.200     978.05     25.104     25.104
  2  3000.1     7920.6     4.1791     973.42     22.583     24.086
  3  23167.     8055.5     30.658     971.15     99.361     24.473
  4  23316.     8204.6     30.903     968.22     99.896     24.907
 28  26408.     11296.     35.375     970.33     103.41     32.148
 29  26441.     11329.     35.424     970.80     103.66     32.271
 30  26487.     11375.     35.484     972.22     104.42     32.532
 33  27665.     12553.     37.194     999.30     123.85     39.305
 34  36676.     15170.     50.378     957.67     100.08     57.801
 35  21506.     0.0000     34.273     0.0000     206.79

          DENSITY                VISCOSITY        SURFACE TENSION
          KG/CUM                 CP               DYNE/CM
STAGE LIQUID FROM  VAPOR TO    LIQUID FROM  VAPOR TO      LIQUID FROM
  1  685.65     8.5524     0.17369     0.15204E-01    29.040
  2  717.89     8.1368     0.16425     0.15388E-01    34.202
  3  755.67     8.2948     0.29537     0.15337E-01    27.207
  4  754.50     8.4739     0.28980     0.15275E-01    27.332
 28  746.50     11.642     0.26572     0.14147E-01    13.239
 29  746.42     11.670     0.26569     0.14174E-01    13.146
 30  746.43     11.700     0.26607     0.14250E-01    13.070
 33  743.80     12.562     0.27462     0.15479E-01    12.568
 34  728.02     15.840     0.23520     0.16170E-01    11.221
 35  627.49                0.18536                    6.5037

    MARANGONI INDEX   FLOW PARAM        QR        REDUCED F-FACTOR
STAGE    DYNE/CM                        CUM/HR       (GM-L)**.5/MIN
  1                 0.11168          109.92          47671.
  2    5.1625         0.39148E-01       104.23          46278.
  3   -7.9188         0.30351          102.31          46616.
  4   0.12541         0.30349          103.19          46975.
 28   -.11553         0.29237          122.13          55179.

    MARANGONI INDEX   FLOW PARAM        QR        REDUCED F-FACTOR
STAGE    DYNE/CM                        CUM/HR       (GM-L)**.5/MIN
 29   -.93078E-01      0.29232          122.35          55273.
 30   -.76493E-01      0.29233          122.69          55425.
 33   -.32899          0.29886          130.98          59030.
 34   -1.3185          0.38378          142.82          63525.
 35   -4.7170          0.22525          0.0000          0.0000

          ************************************
          ***** TRAY SIZING CALCULATIONS *****
          ************************************

  *******************
  *** SECTION   1 ***
  *******************

  STARTING STAGE NUMBER                          2
  ENDING STAGE NUMBER                           34
  FLOODING CALCULATION METHOD                        GLITSCH

  DESIGN PARAMETERS
  -----------------
  PEAK CAPACITY FACTOR                          1.00000
  SYSTEM FOAMING FACTOR                          1.00000
  FLOODING FACTOR                              0.80000
  MINIMUM COLUMN DIAMETER        METER                 0.30480
  MINIMUM DC AREA/COLUMN AREA                          0.100000
  HOLE AREA/ACTIVE AREA                         0.12000

  TRAY SPECIFICATIONS
  -------------------
  TRAY TYPE                                  SIEVE
  NUMBER OF PASSES                                1
```

```
TRAY SPACING                    METER                    0.60960
     ***** SIZING RESULTS @ STAGE WITH MAXIMUM DIAMETER *****

STAGE WITH MAXIMUM DIAMETER                              34
COLUMN DIAMETER                 METER                    0.87260
DC AREA/COLUMN AREA                                      0.14032
DOWNCOMER VELOCITY              M/SEC                    0.16676
FLOW PATH LENGTH                METER                    0.52709
SIDE DOWNCOMER WIDTH            METER                    0.17276
SIDE WEIR LENGTH                METER                    0.69542
CENTER DOWNCOMER WIDTH          METER                    0.0
CENTER WEIR LENGTH              METER                    0.0
OFF-CENTER DOWNCOMER WIDTH      METER                    0.0
OFF-CENTER SHORT WEIR LENGTH    METER                    0.0
OFF-CENTER LONG WEIR LENGTH     METER                    0.0
TRAY CENTER TO OCDC CENTER      METER                    0.0
                 **** SIZING PROFILES ****
```

STAGE	DIAMETER METER	TOTAL AREA SQM	ACTIVE AREA SQM	SIDE DC AREA SQM
2	0.66585	0.34821	0.27857	0.34821E-01
3	0.71865	0.40562	0.30530	0.50161E-01
4	0.72185	0.40925	0.30812	0.50562E-01
5	0.72514	0.41299	0.31105	0.50970E-01
6	0.72859	0.41692	0.31415	0.51385E-01
7	0.73215	0.42101	0.31740	0.51803E-01
8	0.73578	0.42519	0.32074	0.52223E-01
9	0.73944	0.42943	0.32415	0.52643E-01
10	0.74313	0.43373	0.32760	0.53061E-01
11	0.74683	0.43806	0.33111	0.53479E-01
12	0.75058	0.44246	0.33465	0.53908E-01
13	0.75433	0.44690	0.33823	0.54334E-01
14	0.75807	0.45134	0.34184	0.54754E-01
15	0.76177	0.45577	0.34544	0.55164E-01
16	0.76540	0.46011	0.34899	0.55561E-01
17	0.76889	0.46432	0.35244	0.55937E-01
18	0.77218	0.46830	0.35572	0.56288E-01
19	0.77522	0.47199	0.35878	0.56608E-01
20	0.77796	0.47534	0.36155	0.56896E-01
21	0.78039	0.47831	0.36402	0.57149E-01
22	0.78249	0.48090	0.36616	0.57368E-01
23	0.78428	0.48310	0.36799	0.57556E-01
24	0.78579	0.48495	0.36952	0.57715E-01
25	0.78703	0.48649	0.37079	0.57848E-01
26	0.78805	0.48775	0.37183	0.57961E-01
27	0.78889	0.48879	0.37267	0.58058E-01
28	0.78960	0.48967	0.37338	0.58143E-01
29	0.79026	0.49049	0.37403	0.58227E-01
30	0.79100	0.49141	0.37476	0.58328E-01
31	0.79221	0.49292	0.37591	0.58506E-01
32	0.79517	0.49661	0.37854	0.59032E-01
33	0.80523	0.50925	0.38674	0.61256E-01
34	0.87260	0.59803	0.43020	0.83918E-01

```
          ************************************
          ***** TRAY RATING CALCULATIONS *****
          ************************************

********************
*** SECTION   1 ***
********************

STARTING STAGE NUMBER                          2
ENDING STAGE NUMBER                           34
FLOODING CALCULATION METHOD                        GLITSCH
PEAK CAPACITY FACTOR                        1.00000
SYSTEM FOAMING FACTOR                        1.00000
OVERALL TRAY EFFICIENCY                      1.00000
TRAY SPECIFICATIONS
-------------------

              !            ! !
              !      A     ! !
              ! !----------------! AA
              ! !            !
              ! !    A       !
              !----------------! ! AA
              !            ! !
              !            ! !
```

```
                    SINGLE CROSSFLOW TRAY
NUMBER OF PASSES                                  1
DIAMETER                    METER                 0.90000
TRAY SPACING                METER                 0.60960
DECK THICKNESS              METER                 0.0034036
TRAY TYPE                                         SIEVE
HOLE AREA/ACTIVE AREA                             0.12000
HOLE DIAMETER               METER                 0.012700

DOWNCOMER DIMENSIONS
--------------------
WEIR HEIGHT                 METER                 0.050800
DC CLEARANCE                METER                 0.038100
TOP DC WIDTH                METER                 0.14085

RATE-BASED SPECIFICATIONS
-------------------------
FLOW MODEL                                        MIXED-MIXED
INTERFACIAL AREA FACTOR                           1.00000
LIQUID FILM RESISTANCE                            FILMRXN
VAPOR FILM RESISTANCE                             FILMRXN
LIQUID FILM CORRECTION                            YES
VAPOR FILM CORRECTION                             YES
MASS TRANSFER CORRELATION                         CHENCHUANG93
HEAT TRANSFER CORRELATION                         CHILTON-COLB
INTERFACIAL AREA CORRELATION                      ZUIDERWEG-82
HOLDUP CORRELATION                                BENNETT-83
HOLE PITCH                  METER                 0.034865

              ***** RATING RESULTS *****

DIAMETER                    METER                 0.90000
STAGE-MAX FLOODING FACTOR                         34
FLOODING FACTOR                                   0.70134
STAGE-MAX DC BACKUP/TRAY SPACE                    34
DC BACKUP                   METER                 0.26402
DC BACKUP/TRAY SPACING                            0.43310
STAGE-MAX DC VELOCITY                             34
DC VELOCITY                 M/SEC                 0.21992
STAGE-MAX WEIRLOADING                             34 (PANEL A)
WEIR LOADING                SQCM/SEC              213.981
SECTION PRESSURE DROP       BAR                   0.20238
MAX APPROACH TO SYSTEM LIMIT                      0.51135
STAGE-MAX SYSTEM LIMIT                            34
                    **** RATING PROFILES ****

    FLOODING                          DC BACKUP/
STAGE FACTOR     DC VELOCITY  DC BACKUP    TRAY SPACE  PRES. DROP
                 M/SEC        METER                    BAR
 2   0.4415     0.1824E-01   0.1224      0.2008     0.4310E-02
 3   0.5065     0.1338       0.1895      0.3108     0.5778E-02
 4   0.5108     0.1349       0.1904      0.3124     0.5798E-02
 5   0.5152     0.1360       0.1914      0.3140     0.5822E-02
 6   0.5199     0.1371       0.1924      0.3156     0.5847E-02
 7   0.5248     0.1382       0.1934      0.3173     0.5874E-02
 8   0.5298     0.1393       0.1944      0.3190     0.5902E-02
 9   0.5349     0.1405       0.1955      0.3207     0.5932E-02
10   0.5401     0.1416       0.1965      0.3224     0.5962E-02
11   0.5453     0.1427       0.1976      0.3241     0.5992E-02
12   0.5506     0.1438       0.1986      0.3258     0.6024E-02
13   0.5559     0.1449       0.1997      0.3275     0.6055E-02
14   0.5612     0.1460       0.2007      0.3292     0.6087E-02
15   0.5666     0.1470       0.2017      0.3309     0.6119E-02
16   0.5718     0.1480       0.2028      0.3326     0.6150E-02
17   0.5769     0.1490       0.2037      0.3342     0.6180E-02
18   0.5817     0.1499       0.2047      0.3357     0.6209E-02

    FLOODING                          DC BACKUP/
STAGE FACTOR     DC VELOCITY  DC BACKUP    TRAY SPACE  PRES. DROP
                 M/SEC        METER                    BAR
19   0.5862     0.1507       0.2055      0.3371     0.6235E-02
20   0.5903     0.1514       0.2063      0.3384     0.6260E-02
21   0.5939     0.1520       0.2070      0.3395     0.6281E-02
22   0.5970     0.1525       0.2076      0.3405     0.6300E-02
23   0.5997     0.1530       0.2081      0.3413     0.6316E-02
24   0.6019     0.1534       0.2085      0.3420     0.6329E-02
25   0.6038     0.1537       0.2089      0.3426     0.6340E-02
26   0.6053     0.1540       0.2092      0.3431     0.6349E-02
27   0.6065     0.1542       0.2094      0.3436     0.6356E-02
```

28	0.6076	0.1544	0.2096	0.3439	0.6363E-02
29	0.6085	0.1546	0.2099	0.3443	0.6369E-02
30	0.6096	0.1549	0.2101	0.3447	0.6377E-02
31	0.6113	0.1554	0.2106	0.3454	0.6392E-02
32	0.6153	0.1568	0.2118	0.3475	0.6425E-02
33	0.6281	0.1624	0.2166	0.3553	0.6515E-02
34	0.7013	0.2199	0.2640	0.4331	0.7130E-02

Table C-3. Sensitivity analysis.

S-1. Molar reflux ratio sensitivity analysis of the equilibrium design 1.

Reflux ratio	Ester mass fraction of the bottom	Water mass fraction on stage 3	Ester flow rate at top KG/HR	Flow rate of biodiesel at bottom KG/HR	Flow rate of biodiesel at top KG/HR
0.1	0.86118	0.02971	6.05483	2835.47132	3.44169
0.2	0.86629	0.03852	5.35552	2727.83227	1.97358
0.3	0.87205	0.04806	5.05191	2606.23923	1.37189
0.4	0.87768	0.05810	5.00019	2486.89396	1.06792
0.5	0.88282	0.06845	5.12532	2377.91453	0.89567
0.6	0.88730	0.07895	5.38746	2282.82667	0.79112
0.7	0.89112	0.08951	5.76401	2201.80143	0.72471
0.8	0.89426	0.10003	6.24640	2134.92350	0.68248
0.9	0.89679	0.11046	6.82761	2081.13640	0.65565
1.0	0.89878	0.12076	7.50845	2038.75415	0.63960
1.1	0.90028	0.13090	8.28918	2006.84260	0.63117
1.2	0.90133	0.14084	9.17251	1984.30242	0.62831
1.3	0.90199	0.15059	10.16212	1970.17072	0.62960
1.4	0.90230	0.16012	11.26226	1963.62432	0.63399
1.5	0.90228	0.16943	12.47746	1963.94386	0.64065

S-2. Reboiler location sensitivity analysis of the equilibrium design 1.

Stage	Q on stage 3 WATER	Q on stage 4 WATER	Q on stage 5 WATER	Q on stage 6 WATER
1	0.37084	0.37074	0.37074	0.37074
2	0.73898	0.73940	0.73941	0.73941
3	0.08918	0.11174	0.11198	0.11200
4	0.07365	0.07654	0.09640	0.09665
5	0.05950	0.06084	0.06382	0.08071
6	0.04699	0.04763	0.04900	0.05183
7	0.03640	0.03672	0.03735	0.03864
8	0.02782	0.02799	0.02827	0.02885
9	0.02111	0.02121	0.02133	0.02156
10	0.01598	0.01604	0.01609	0.01617

Q = 500 kW

S-3. Reboiler duty sensitivity analysis (Q on stage 3) of the equilibrium design 1.

Q	Ester mass fraction of the bottom	Water mass fraction on stage 3	Ester flow rate at top KG/SEC	Flow rate of biodiesel at bottom KG/SEC	Flow rate of biodiesel at top KG/SEC
0	0.99311	0.11202	0.01088	0.00385	0.00107
100	0.99308	0.10753	0.01070	0.00405	0.00109
200	0.99304	0.10299	0.01054	0.00429	0.00112
300	0.99300	0.09841	0.01041	0.00456	0.00115
400	0.99295	0.09381	0.01032	0.00488	0.00118
500	0.99288	0.08916	0.01025	0.00527	0.00122
600	0.99281	0.08450	0.01022	0.00571	0.00128
700	0.99272	0.07983	0.01024	0.00624	0.00134
800	0.99261	0.07514	0.01030	0.00685	0.00141
900	0.99248	0.07046	0.01044	0.00758	0.00150
1000	0.99233	0.06579	0.01064	0.00843	0.00160
1100	0.99216	0.06114	0.01094	0.00942	0.00173
1200	0.99195	0.05655	0.01135	0.01055	0.00189
1300	0.99171	0.05202	0.01190	0.01185	0.00209
1400	0.99145	0.04758	0.01263	0.01329	0.00233
1500	0.99115	0.04327	0.01359	0.01486	0.00264

S-4. Molar reflux ratio sensitivity analysis of the rate-based design 2.

Reflux ratio	Ester mass fraction of the bottom	Water mass fraction on stage 3	Ester flow rate at top KG/HR	Flow rate of biodiesel at bottom KG/HR	Flow rate of biodiesel at top KG/HR
0.1	0.98982	0.01743	75.99117	71.84881	45.03286
0.2	0.98999	0.02852	72.75785	71.18981	30.57581
0.3	0.99032	0.03891	68.40972	66.25065	22.00291
0.4	0.99072	0.04871	63.86108	59.22434	16.56886
0.5	0.99111	0.05804	59.75685	52.04953	12.98465
0.6	0.99145	0.06697	56.37769	45.83389	10.54796
0.7	0.99171	0.07557	53.77498	40.95669	8.84821
0.8	0.99190	0.08388	51.89275	37.40063	7.63564
0.9	0.99202	0.09192	50.63929	35.00548	6.75391
1.0	0.99210	0.09972	49.92218	33.59677	6.10273
1.1	0.99213	0.10728	49.66324	33.03380	5.61639
1.2	0.99213	0.11462	49.80482	33.21837	5.25093
1.3	0.99209	0.12174	50.31362	34.08675	4.97641
1.4	0.99201	0.12864	51.18568	35.59434	4.77224
1.5	0.99191	0.13533	52.45570	37.69559	4.62421

S-5. Reboiler duty sensitivity analysis (Q on stage 3) of the rate-based design 2.

Q	Ester mass fraction of the bottom	Water mass fraction on stage 3	Ester flow rate at top KG/SEC	Flow rate of biodiesel at bottom KG/SEC	Flow rate of biodiesel at top KG/SEC
800	0.99201	0.08277	0.01061	0.01041	0.00150
900	0.99196	0.08078	0.01129	0.01056	0.00168
1000	0.99189	0.07895	0.01223	0.01077	0.00189
1100	0.99181	0.07722	0.01343	0.01105	0.00215
1200	0.99171	0.07557	0.01494	0.01138	0.00246
1300	0.99158	0.07400	0.01680	0.01175	0.00283
1400	0.99144	0.07248	0.01909	0.01217	0.00328
1500	0.99128	0.07102	0.02185	0.01262	0.00382

APPENDIX D: Thermally Coupled Design

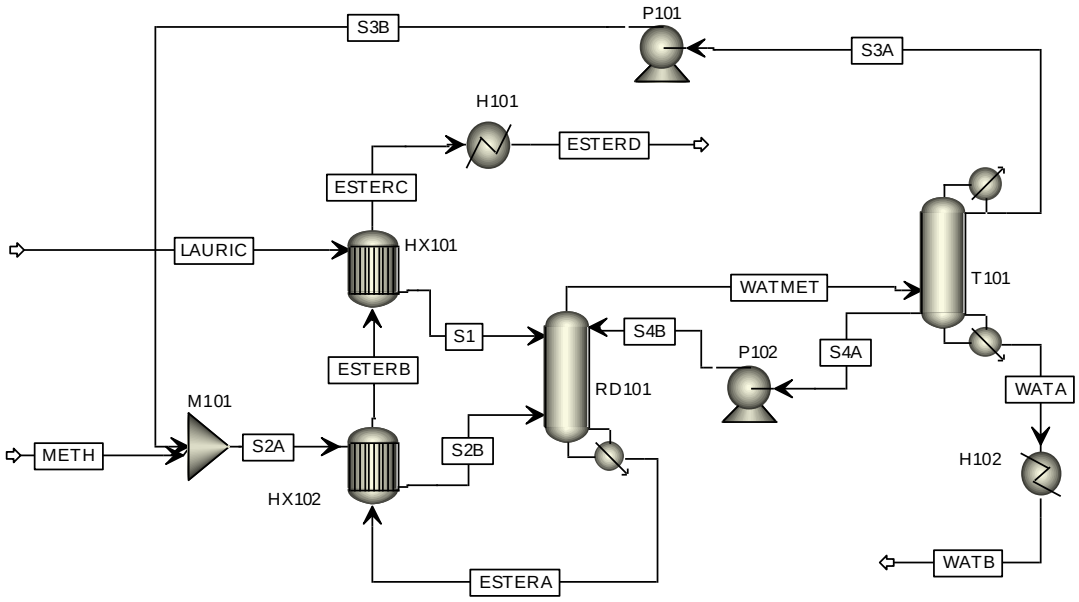

Fig. D-1. Process flow diagrams for biodiesel plant of the thermally coupled design.

Table D-1. Input summary of the thermally coupled design (Fig. D-1).

```
Input Summary created by Aspen Plus Rel. 25.0 at 13:57:13 Mon Feb 27, 2012

COMPONENTS
   WATER H2O /
   METHANOL CH4O /
   DODECAN C12H24O2 /
   METESTER C13H26O2

FLOWSHEET
   BLOCK M101 IN=METH S3B OUT=S2A
   BLOCK RD101 IN=S4B S1 S2B OUT=WATMET ESTERA
   BLOCK T101 IN=WATMET OUT=S3A WATA S4A
   BLOCK P102 IN=S4A OUT=S4B
   BLOCK P101 IN=S3A OUT=S3B
   BLOCK HX102 IN=ESTERA S2A OUT=ESTERB S2B
   BLOCK HX101 IN=ESTERB LAURIC OUT=ESTERC S1
   BLOCK H101 IN=ESTERC OUT=ESTERD
   BLOCK H102 IN=WATA OUT=WATB

PROPERTIES UNIQUAC
   PROPERTIES NRTL

ESTIMATE ALL
   UNIQ ALL ALL UNIFAC
   NRTL ALL ALL UNIFAC

STREAM ESTERA
   SUBSTREAM MIXED TEMP=275.0972 PRES=9.5
   MOLE-FLOW WATER 0.00983426 / METHANOL 4.163181 / DODECAN  &
      0.1492543 / METESTER 99.67773

STREAM LAURIC
   SUBSTREAM MIXED TEMP=25. PRES=9.
   MOLE-FLOW DODECAN 100.

STREAM METH
   SUBSTREAM MIXED TEMP=25. PRES=9.5
   MOLE-FLOW METHANOL 105.

STREAM S2B
   SUBSTREAM MIXED TEMP=44.75954 PRES=9.5
   MOLE-FLOW WATER 0.9999997 / METHANOL 199. / DODECAN  &
      4E-033 / METESTER 2.67E-016

STREAM S3A
   SUBSTREAM MIXED TEMP=64.36065 PRES=1.
   MOLE-FLOW WATER 0.9999997 / METHANOL 94. / DODECAN  &
      4E-033 / METESTER 2.67E-016

STREAM S4A
   SUBSTREAM MIXED TEMP=92.38084 PRES=1.
   MOLE-FLOW WATER 6.575007 / METHANOL 0.4038835 / DODECAN  &
      0.00183058 / METESTER 0.019279

STREAM WATMET
   SUBSTREAM MIXED TEMP=157.1697 PRES=9.
   MOLE-FLOW WATER 105.4201 / METHANOL 95.37889 / DODECAN  &
      0.0511663 / METESTER 0.1496888

BLOCK M101 MIXER
   PARAM T-EST=90.

BLOCK H101 HEATER
   PARAM TEMP=25. PRES=1.

BLOCK H102 HEATER
   PARAM TEMP=25. PRES=1.

BLOCK HX101 HEATX
   PARAM T-COLD=100. CALC-TYPE=DESIGN U-OPTION=PHASE  &
      F-OPTION=CONSTANT CALC-METHOD=SHORTCUT
   FEEDS HOT=ESTERB COLD=LAURIC
   PRODUCTS HOT=ESTERC COLD=S1
   HOT-SIDE DP-OPTION=CONSTANT
   COLD-SIDE DP-OPTION=CONSTANT

BLOCK HX102 HEATX
```

```
   PARAM T-COLD=110. CALC-TYPE=DESIGN U-OPTION=PHASE  &
      F-OPTION=CONSTANT CALC-METHOD=SHORTCUT
   FEEDS HOT=ESTERA COLD=S2A
   PRODUCTS HOT=ESTERB COLD=S2B
   HOT-SIDE DP-OPTION=CONSTANT
   COLD-SIDE DP-OPTION=CONSTANT

BLOCK RD101 RADFRAC
   PARAM NSTAGE=30
   COL-CONFIG CONDENSER=NONE
   FEEDS S4B 1 / S1 3 / S2B 29
   PRODUCTS WATMET 1 V / ESTERA 30 L
   P-SPEC 3 9. / 29 9.5
   COL-SPECS MOLE-B=104.
   REAC-STAGES 3 29 R-1
   HOLD-UP 3 29 VOL-LHLDP=0.043
   T-EST 1 157.17 / 10 143.92 / 20 141.68 / 25 141.84 /  &
      29 141.67 / 30 275.1
   TRAY-SIZE 1 2 29 SIEVE
   TRAY-RATE 1 2 29 SIEVE DIAM=0.86011061 <meter> P-UPDATE=NO
   REPORT TARGET HYDANAL

BLOCK T101 RADFRAC
   PARAM NSTAGE=12
   COL-CONFIG CONDENSER=TOTAL
   FEEDS WATMET 10
   PRODUCTS WATA 12 L / S3A 1 L / S4A 10 L MOLE-FLOW=7.
   P-SPEC 1 1.
   COL-SPECS MOLE-D=95. MOLE-RR=3.
   HEATERS 6 -600. <kW>
   SPEC 1 MOLE-FLOW 1. COMPS=WATER STREAMS=S3A
   VARY 1 MOLE-RR 2. 4.
   TRAY-SIZE 1 2 11 SIEVE
   TRAY-RATE 1 2 11 SIEVE DIAM=1.27707645 <meter> P-UPDATE=NO
   PROPERTIES NRTL FREE-WATER=STEAM-TA SOLU-WATER=3  &
      TRUE-COMPS=YES
   REPORT TARGET HYDANAL

BLOCK P101 PUMP
   PARAM PRES=9.5

BLOCK P102 PUMP
   PARAM PRES=9. NPHASE=2
   BLOCK-OPTION FREE-WATER=NO

EO-CONV-OPTI

SENSITIVITY S-3
   DEFINE XESTERD MASS-FRAC STREAM=ESTERA SUBSTREAM=MIXED  &
      COMPONENT=METESTER
   DEFINE RDUTY BLOCK-VAR BLOCK=RD101 VARIABLE=REB-DUTY  &
      SENTENCE=RESULTS
   TABULATE 1 "XESTERD"
   TABULATE 2 "RDUTY"
   VARY BLOCK-VAR BLOCK=T101 VARIABLE=MOLE-FLOW  &
      SENTENCE=PRODUCTS ID1=S4A
   RANGE LOWER="5" UPPER="20" INCR="1"

CONV-OPTIONS
   PARAM TOL=0.001
   WEGSTEIN MAXIT=60

TEAR
   TEAR ESTERA / S3A / S4A / WATMET

STREAM-REPOR MOLEFLOW MASSFLOW MOLEFRAC MASSFRAC

PROPERTY-REP PCES
REACTIONS R-1 REAC-DIST
   REAC-DATA 1 KINETIC
   RATE-CON 1 PRE-EXP=120000. ACT-ENERGY=55000. <kJ/kmol>
   STOIC 1 METHANOL -1. / DODECAN -1. / WATER 1. /  &
      METESTER 1.
   POWLAW-EXP 1 METHANOL 1. / DODECAN 1. / WATER 0. /  &
      METESTER 0.
```

Table D-2. Column RD101 results summary of the thermally coupled design (Fig. D-1).

```
BLOCK:  RD101    MODEL: RADFRAC
 --------------------------------
  INLETS   - S4B     STAGE   1
           S1      STAGE   3
           S2B     STAGE  29
  OUTLETS  - WATMET   STAGE   1
           ESTERA   STAGE  30
  PROPERTY OPTION SET:   UNIQUAC   UNIQUAC / IDEAL GAS

                 ***  MASS AND ENERGY BALANCE  ***
                      IN         OUT      GENERATION   RELATIVE DIFF.
  TOTAL BALANCE
  MOLE(KMOL/HR )        307.000      307.000       0.00000     -0.419598E-06
  MASS(KG/HR   )        26562.7      26562.7                   0.511433E-06
  ENTHALPY(GCAL/HR )    -28.2285     -24.0162                  -0.149223

                 **********************
                 ****  INPUT DATA  ****
                 **********************

  ****   INPUT PARAMETERS   ****

   NUMBER OF STAGES                                    30
   ALGORITHM OPTION                                    STANDARD
   INITIALIZATION OPTION                               STANDARD
   HYDRAULIC PARAMETER CALCULATIONS                    NO
   INSIDE LOOP CONVERGENCE METHOD                      NEWTON
   DESIGN SPECIFICATION METHOD                         NESTED
   MAXIMUM NO. OF OUTSIDE LOOP ITERATIONS              25
   MAXIMUM NO. OF INSIDE LOOP ITERATIONS               10
   MAXIMUM NUMBER OF FLASH ITERATIONS                  30
   FLASH TOLERANCE                                     0.000100000
   OUTSIDE LOOP CONVERGENCE TOLERANCE                  0.000100000

  ****   COL-SPECS   ****

   MOLAR VAPOR DIST / TOTAL DIST                       1.00000
   MOLAR BOTTOMS RATE          KMOL/HR                 104.000
   CONDENSER DUTY (W/O SUBCOOL)   GCAL/HR              0.0

  **** REAC-STAGES SPECIFICATIONS ****

   STAGE  TO  STAGE          REACTIONS/CHEMISTRY ID
     3        29                  R-1

  **** HOLD-UP SPECIFICATIONS ****

   STAGE  TO  STAGE    LIQUID HOLDUP       VAPOR HOLDUP
     3        29       4.3000-02 CUM         MISSING

     *****  REACTION PARAGRAPH R-1     *****

      ****  REACTION PARAMETERS  ****

  RXN NO. TYPE        PHASE      CONC.    TEMP APP TO EQUIL    CONVERSION
                      BASIS          C
    1   KINETIC      LIQUID     MOLAR

     **  STOICHIOMETRIC COEFFICIENTS  **
  RXN NO.    WATER        METHANOL     DODECAN      METESTER
    1       1.000       -1.000       -1.000        1.000

     **  COEFFICIENTS IN GENERAL POWER LAW EXPRESSION  **

  RXN NO.  PRE-EXPONENTIAL     ACTIVATION        TEMPERATURE
           FACTOR              ENERGY            EXPONENT
                               KCAL/MOL
    1    0.12000E+06          13.137            0.0000

     **  COMPONENT EXPONENTS IN GENERAL POWER LAW EXPRESSION  **

  RXN NO.    WATER        METHANOL     DODECAN      METESTER
    1       0.000        1.000        1.000        0.000

  ****    PROFILES   ****

   P-SPEC         STAGE   3  PRES, BAR                 9.00000
```

```
                29                    9.50000
 TEMP-EST     STAGE   1  TEMP, C              157.170
                10                   143.920
                20                   141.680
                25                   141.840
                29                   141.670
                30                   275.100

               ********************
               ****  RESULTS  ****
               ********************

 ***   COMPONENT SPLIT FRACTIONS   ***

                   OUTLET STREAMS
                   --------------
            WATMET      ESTERA
 COMPONENT:
 WATER      .99991      .92513E-04
 METHANOL   .95813      .41874E-01
 DODECAN    .20869      .79131
 METESTER   .15445E-02  .99846

 ***    SUMMARY OF KEY RESULTS    ***

 TOP STAGE TEMPERATURE        C                  155.497
 BOTTOM STAGE TEMPERATURE     C                  274.964
 TOP STAGE LIQUID FLOW        KMOL/HR            8.20708
 BOTTOM STAGE LIQUID FLOW     KMOL/HR            104.000
 TOP STAGE VAPOR FLOW         KMOL/HR            203.000
 BOILUP VAPOR FLOW            KMOL/HR            217.533
 MOLAR BOILUP RATIO                              2.09166
 CONDENSER DUTY (W/O SUBCOOL)  GCAL/HR           0.0
 REBOILER DUTY                GCAL/HR            4.21236

 ****   MAXIMUM FINAL RELATIVE ERRORS   ****

 DEW POINT                  0.12298E-07  STAGE=  5
 BUBBLE POINT               0.67763E-07  STAGE=  1
 COMPONENT MASS BALANCE     0.39692E-12  STAGE=  1 COMP=METESTER
 ENERGY BALANCE             0.68414E-08  STAGE=  3

 ****    PROFILES   ****

 **NOTE** REPORTED VALUES FOR STAGE LIQUID AND VAPOR RATES ARE THE FLOWS
        FROM THE STAGE INCLUDING ANY SIDE PRODUCT.

                              ENTHALPY
STAGE TEMPERATURE   PRESSURE          KCAL/MOL          HEAT DUTY
    C            BAR          LIQUID      VAPOR       GCAL/HR

 1   155.50      9.0000      -63.863     -51.966
 2   155.44      9.0000      -63.856     -51.947
 3   157.08      9.0000      -106.95     -51.923
 4   154.67      9.0192      -105.60     -51.236
28   143.40      9.4808      -96.074     -46.781
29   142.01      9.5000      -91.608     -46.784
30   274.96      9.5000      -129.49     -54.133        4.2123

STAGE     FLOW RATE              FEED RATE             PRODUCT RATE
        KMOL/HR                KMOL/HR               KMOL/HR
    LIQUID     VAPOR      LIQUID    VAPOR    MIXED     LIQUID    VAPOR
 1  8.207      203.0       7.0000                      203.0001
 2  7.802      204.2
 3  209.3      203.8      100.0000
 4  210.0      305.3
28  227.9      322.9
29  321.5      323.9      200.0000
30  104.0      217.5                            104.0000

  ****  MASS FLOW PROFILES  ****

STAGE     FLOW RATE              FEED RATE             PRODUCT RATE
        KG/HR                  KG/HR                 KG/HR
    LIQUID     VAPOR      LIQUID    VAPOR    MIXED     LIQUID    VAPOR
 1  166.5      5036.      136.1913                     5036.0208
 2  158.5      5066.
 3 0.2304E+05  5058.      .20032+05
 4 0.2341E+05  7905.
```

28 0.2555E+05 0.1039E+05
29 0.3331E+05 0.1042E+05 6394.4051
30 0.2153E+05 0.1178E+05 .21527+05

**** MOLE-X-PROFILE ****

STAGE	WATER	METHANOL	DODECAN	METESTER
1	0.84454	0.15489	0.55245E-03	0.17959E-04
2	0.84356	0.15583	0.59099E-03	0.16046E-04
3	0.27034	0.25096	0.38881	0.89880E-01
4	0.22745	0.29525	0.31267	0.16464
28	0.22036E-02	0.55833	0.10731E-02	0.43839
29	0.23133E-02	0.60496	0.76336E-03	0.39197
30	0.95454E-04	0.40132E-01	0.18177E-02	0.95795

**** MOLE-Y-PROFILE ****

STAGE	WATER	METHANOL	DODECAN	METESTER
1	0.52855	0.47044	0.24559E-03	0.75919E-03
2	0.52733	0.47175	0.25781E-03	0.66462E-03
3	0.52666	0.47242	0.25870E-03	0.66583E-03
4	0.45435	0.54442	0.16925E-03	0.10634E-02
28	0.51058E-02	0.99374	0.21328E-06	0.11559E-02
29	0.47785E-02	0.99419	0.12577E-06	0.10355E-02
30	0.33736E-02	0.87499	0.25930E-03	0.12138

**** K-VALUES ****

STAGE	WATER	METHANOL	DODECAN	METESTER
1	0.62584	3.0374	0.44455	42.274
2	0.62512	3.0273	0.43623	41.419
3	1.9481	1.8824	0.66535E-03	0.74080E-02
4	1.9976	1.8440	0.54132E-03	0.64590E-02
28	2.3171	1.7798	0.19875E-03	0.26367E-02
29	2.0656	1.6434	0.16476E-03	0.26418E-02
30	35.343	21.803	0.14265	0.12670

**** RATES OF GENERATION ****
KMOL/HR

STAGE	WATER	METHANOL	DODECAN	METESTER
1	0.000	0.000	0.000	0.000
2	0.000	0.000	0.000	0.000
3	18.62	-18.62	-18.62	18.62
4	15.70	-15.70	-15.70	15.70
28	0.6530E-01	-.6530E-01	-.6530E-01	0.6530E-01
29	0.5547E-01	-.5547E-01	-.5547E-01	0.5547E-01
30	0.000	0.000	0.000	0.000

**** MASS-X-PROFILE ****

STAGE	WATER	METHANOL	DODECAN	METESTER
1	0.74978	0.24457	0.54537E-02	0.18970E-03
2	0.74818	0.24583	0.58284E-02	0.16933E-03
3	0.44250E-01	0.73061E-01	0.70765	0.17504
4	0.36755E-01	0.84859E-01	0.56183	0.31656
28	0.35409E-03	0.15957	0.19173E-02	0.83816
29	0.40228E-03	0.18711	0.14761E-02	0.81101
30	0.83079E-05	0.62126E-02	0.17591E-02	0.99202

**** MASS-Y-PROFILE ****

STAGE	WATER	METHANOL	DODECAN	METESTER
1	0.38383	0.60763	0.19831E-02	0.65596E-02
2	0.38291	0.60927	0.20816E-02	0.57421E-02
3	0.38227	0.60989	0.20879E-02	0.57503E-02
4	0.31613	0.67375	0.13095E-02	0.88037E-02
28	0.28583E-02	0.98944	0.13276E-05	0.76990E-02
29	0.26765E-02	0.99042	0.78331E-06	0.69008E-02
30	0.11221E-02	0.51760	0.95897E-03	0.48032

****
***** COLUMN TARGETING RESULTS *****
****

*** THERMAL ANALYSIS ***

STAGE	TEMPERATURE C	PRESSURE BAR	ENTHALPY DEFICIT GCAL/HR	EXERGY LOSS GCAL/HR	CARNOT FACTOR
1	155.50	9.0000	-.54070E-02	0.40187E-03	0.30444
2	155.44	9.0000	-.23438E-03	0.53483E-05	0.30435
3	157.08	9.0000	0.22065	0.12474	0.30700
4	154.67	9.0192	0.24760	0.28029E-01	0.30309
28	143.40	9.4808	-.55459E-02	0.42847E-03	0.28423
29	142.01	9.5000	1.4036	0.14550	0.28185

30	274.96	9.5000	4.2124	0.37949	0.45604

*** HYDRAULIC ANALYSIS ***
*** MOLE BASIS ***

STAGE	VAPOR TO IDEAL MINIMUM KMOL/HR	ACTUAL KMOL/HR	HYDRAULIC MAXIMUM KMOL/HR
1	204.99	204.21	631.49
2	204.23	203.80	630.24
3	305.11	305.31	518.09
4	305.91	306.01	508.19
28	323.98	323.89	480.83
29	150.56	217.53	303.75
30	0.0000	0.0000	0.0000

STAGE	LIQUID FROM IDEAL MINIMUM KMOL/HR	ACTUAL KMOL/HR	HYDRAULIC MAXIMUM KMOL/HR
1	8.9887	8.2071	25.380
2	8.2316	7.8020	24.127
3	209.11	209.31	355.18
4	209.91	210.01	348.76
28	227.98	227.89	338.31
29	254.56	321.53	448.97
30	0.0000	104.00	145.22

*** MASS BASIS ***

STAGE	VAPOR TO IDEAL MINIMUM KG/HR	ACTUAL KG/HR	HYDRAULIC MAXIMUM KG/HR
1	5085.4	5066.4	15667.
2	5067.0	5058.3	15642.
3	7572.7	7904.8	13414.
4	7920.5	8279.6	13750.
28	10426.	10418.	15465.
29	4842.5	11783.	16453.
30	0.0000	0.0000	0.0000

STAGE	LIQUID FROM IDEAL MINIMUM KG/HR	ACTUAL KG/HR	HYDRAULIC MAXIMUM KG/HR
1	182.40	166.54	515.00
2	167.20	158.47	490.06
3	23015.	23037.	39093.
4	23402.	23412.	38881.
28	25560.	25550.	37930.
29	26371.	33310.	46511.
30	0.0000	21527.	30058.

****
***** HYDRAULIC PARAMETERS *****
****

*** DEFINITIONS ***

MARANGONI INDEX = SIGMA - SIGMATO
FLOW PARAM = (ML/MV)*SQRT(RHOV/RHOL)
QR = QV*SQRT(RHOV/(RHOL-RHOV))
F FACTOR = QV*SQRT(RHOV)
WHERE:
SIGMA IS THE SURFACE TENSION OF LIQUID FROM THE STAGE
SIGMATO IS THE SURFACE TENSION OF LIQUID TO THE STAGE
ML IS THE MASS FLOW OF LIQUID FROM THE STAGE
MV IS THE MASS FLOW OF VAPOR TO THE STAGE
RHOL IS THE MASS DENSITY OF LIQUID FROM THE STAGE
RHOV IS THE MASS DENSITY OF VAPOR TO THE STAGE
QV IS THE VOLUMETRIC FLOW RATE OF VAPOR TO THE STAGE

STAGE	TEMPERATURE C LIQUID FROM	VAPOR TO
1	155.50	155.44
2	155.44	157.08
3	157.08	154.67
4	154.67	152.47
28	143.40	142.01
29	142.01	274.96
30	274.96	274.96

```
          MASS FLOW              VOLUME FLOW        MOLECULAR WEIGHT
          KG/HR                  CUM/HR
STAGE LIQUID FROM  VAPOR TO   LIQUID FROM  VAPOR TO   LIQUID FROM  VAPOR TO
  1   166.54     5066.4    0.21281     808.53     20.292     24.810
  2   158.47     5058.3    0.20260     810.02     20.312     24.820
  3   23037.     7904.8     29.931     1204.1     110.06     25.891
  4   23412.     8279.6     30.462     1198.1     111.48     27.057
 28   25550.     10418.     33.501     1176.9     112.11     32.164
 29   33310.     11783.     43.847     1043.5     103.60     54.166
 30   21527.     0.0000     33.003     0.0000     206.99


          DENSITY                VISCOSITY        SURFACE TENSION
          KG/CUM                 CP               DYNE/CM
STAGE LIQUID FROM  VAPOR TO    LIQUID FROM  VAPOR TO     LIQUID FROM
  1   782.58      6.2661     0.17311     0.14758E-01    41.355
  2   782.19      6.2447     0.17319     0.14817E-01    41.330
  3   769.67      6.5651     0.36085     0.14671E-01    24.324
  4   768.57      6.9108     0.35201     0.14514E-01    22.800
 28   762.66      8.8521     0.30382     0.13671E-01    14.379

          DENSITY                VISCOSITY        SURFACE TENSION
          KG/CUM                 CP               DYNE/CM
STAGE LIQUID FROM  VAPOR TO    LIQUID FROM  VAPOR TO     LIQUID FROM
 29   759.68      11.292     0.29143     0.15877E-01    14.180
 30   652.26                 0.21272                    7.9440

     MARANGONI INDEX   FLOW PARAM         QR         REDUCED F-FACTOR
STAGE    DYNE/CM                        CUM/HR       (GM-L)**.5/MIN
  1                 0.29414E-02      72.641          33732.
  2   -.25271E-01     0.27993E-02      72.667          33736.
  3   -1.8650         0.26916          111.68          51418.
  4   -1.5234         0.26813          114.12          52492.
 28   -.21846E-01     0.26423          127.53          58358.
 29   0.10459         0.34465          128.18          58442.
 30   -6.2360                          0.0000          0.0000

          ************************************
          ***** TRAY SIZING CALCULATIONS *****
          ************************************

  *******************
  *** SECTION   1 ***
  *******************

  STARTING STAGE NUMBER                          2
  ENDING STAGE NUMBER                           29
  FLOODING CALCULATION METHOD                        GLITSCH
  DESIGN PARAMETERS
  -----------------
  PEAK CAPACITY FACTOR                          1.00000
  SYSTEM FOAMING FACTOR                          1.00000
  FLOODING FACTOR                              0.80000
  MINIMUM COLUMN DIAMETER        METER                 0.30480
  MINIMUM DC AREA/COLUMN AREA                          0.100000
  HOLE AREA/ACTIVE AREA                         0.12000

  TRAY SPECIFICATIONS
  -------------------
  TRAY TYPE                                   SIEVE
  NUMBER OF PASSES                                1
  TRAY SPACING                   METER                0.60960

       ***** SIZING RESULTS @ STAGE WITH MAXIMUM DIAMETER *****

  STAGE WITH MAXIMUM DIAMETER                          2
  COLUMN DIAMETER                METER                 0.83604
  DC AREA/COLUMN AREA                           0.13068
  DOWNCOMER VELOCITY             M/SEC                 0.00078447
  FLOW PATH LENGTH               METER                 0.52104
  SIDE DOWNCOMER WIDTH           METER                 0.15750
  SIDE WEIR LENGTH               METER                 0.65382
  CENTER DOWNCOMER WIDTH         METER                 0.0
  CENTER WEIR LENGTH             METER                 0.0
  OFF-CENTER DOWNCOMER WIDTH     METER                 0.0
  OFF-CENTER SHORT WEIR LENGTH   METER                 0.0
  OFF-CENTER LONG WEIR LENGTH    METER                 0.0
  TRAY CENTER TO OCDC CENTER     METER                 0.0
```

**** SIZING PROFILES ****

STAGE	DIAMETER METER	TOTAL AREA SQM	ACTIVE AREA SQM	SIDE DC AREA SQM
2	0.83604	0.54896	0.40548	0.71740E-01
3	0.73955	0.42956	0.33162	0.48972E-01
4	0.74782	0.43923	0.33955	0.49840E-01
5	0.75625	0.44918	0.34779	0.50695E-01
6	0.76387	0.45828	0.35536	0.51460E-01
7	0.77031	0.46603	0.36182	0.52108E-01
8	0.77549	0.47233	0.36706	0.52634E-01
9	0.77955	0.47728	0.37118	0.53052E-01
10	0.78267	0.48111	0.37435	0.53380E-01
11	0.78505	0.48405	0.37677	0.53637E-01
12	0.78687	0.48629	0.37861	0.53840E-01
13	0.78825	0.48800	0.38000	0.54000E-01
14	0.78931	0.48931	0.38105	0.54129E-01
15	0.79011	0.49031	0.38184	0.54232E-01
16	0.79073	0.49107	0.38244	0.54317E-01
17	0.79120	0.49165	0.38288	0.54388E-01
18	0.79155	0.49209	0.38320	0.54447E-01
19	0.79182	0.49243	0.38343	0.54497E-01
20	0.79202	0.49267	0.38359	0.54541E-01
21	0.79216	0.49285	0.38370	0.54579E-01
22	0.79227	0.49298	0.38376	0.54613E-01
23	0.79234	0.49307	0.38378	0.54643E-01
24	0.79238	0.49313	0.38378	0.54671E-01
25	0.79240	0.49316	0.38376	0.54697E-01
26	0.79241	0.49317	0.38373	0.54721E-01
27	0.79242	0.49317	0.38368	0.54745E-01
28	0.79268	0.49350	0.38387	0.54813E-01
29	0.83604	0.54896	0.40548	0.71740E-01

****
***** TRAY RATING CALCULATIONS *****
****

****
*** SECTION 1 ***
****

STARTING STAGE NUMBER 2
ENDING STAGE NUMBER 29
FLOODING CALCULATION METHOD GLITSCH
PEAK CAPACITY FACTOR 1.00000
SYSTEM FOAMING FACTOR 1.00000
OVERALL TRAY EFFICIENCY 1.00000

TRAY SPECIFICATIONS

```
!          ! !
!    A     ! !
! !----------------! AA
! !          !
! !    A     !
!----------------! ! AA
!          ! !
!          ! !
 SINGLE CROSSFLOW TRAY
```

NUMBER OF PASSES 1
DIAMETER METER 0.86011
TRAY SPACING METER 0.60960
DECK THICKNESS METER 0.0034036
TRAY TYPE SIEVE
HOLE AREA/ACTIVE AREA 0.12000
HOLE DIAMETER METER 0.012700

DOWNCOMER DIMENSIONS

WEIR HEIGHT METER 0.050800
DC CLEARANCE METER 0.038100
TOP DC WIDTH METER 0.13461

***** RATING RESULTS *****

DIAMETER METER 0.86011

STAGE-MAX FLOODING FACTOR 29
FLOODING FACTOR 0.71616
STAGE-MAX DC BACKUP/TRAY SPACE 29
DC BACKUP METER 0.25235
DC BACKUP/TRAY SPACING 0.41396
STAGE-MAX DC VELOCITY 29
DC VELOCITY M/SEC 0.20957
STAGE-MAX WEIRLOADING 29 (PANEL A)
WEIR LOADING SQCM/SEC 194.879
SECTION PRESSURE DROP BAR 0.19184
MAX APPROACH TO SYSTEM LIMIT 0.50466
STAGE-MAX SYSTEM LIMIT 29

**** RATING PROFILES ****

STAGE	FLOODING FACTOR	DC VELOCITY M/SEC	DC BACKUP/ DC BACKUP METER	TRAY SPACE	PRES. DROP BAR
2	0.3234	0.9684E-03	0.9979E-01	0.1637	0.3653E-02
3	0.5893	0.1431	0.1985	0.3256	0.6431E-02
4	0.6021	0.1456	0.2011	0.3299	0.6521E-02
5	0.6155	0.1481	0.2038	0.3343	0.6617E-02
6	0.6276	0.1503	0.2063	0.3384	0.6708E-02
7	0.6380	0.1522	0.2084	0.3419	0.6787E-02
8	0.6464	0.1538	0.2102	0.3447	0.6852E-02
9	0.6530	0.1550	0.2116	0.3470	0.6905E-02
10	0.6581	0.1559	0.2127	0.3488	0.6946E-02
11	0.6620	0.1567	0.2135	0.3502	0.6978E-02
12	0.6650	0.1573	0.2142	0.3513	0.7002E-02
13	0.6672	0.1578	0.2147	0.3522	0.7021E-02
14	0.6689	0.1581	0.2151	0.3528	0.7034E-02
15	0.6702	0.1584	0.2154	0.3533	0.7045E-02
16	0.6711	0.1587	0.2156	0.3537	0.7052E-02
17	0.6718	0.1589	0.2158	0.3541	0.7058E-02
18	0.6724	0.1591	0.2160	0.3543	0.7061E-02
19	0.6728	0.1592	0.2161	0.3545	0.7064E-02
20	0.6730	0.1593	0.2162	0.3547	0.7065E-02
21	0.6732	0.1594	0.2163	0.3548	0.7066E-02
22	0.6733	0.1595	0.2164	0.3549	0.7066E-02
23	0.6734	0.1596	0.2164	0.3550	0.7066E-02
24	0.6734	0.1597	0.2165	0.3551	0.7065E-02
25	0.6734	0.1598	0.2165	0.3551	0.7064E-02
26	0.6733	0.1599	0.2165	0.3552	0.7062E-02
27	0.6733	0.1599	0.2166	0.3552	0.7061E-02
28	0.6736	0.1601	0.2167	0.3555	0.7062E-02
29	0.7162	0.2096	0.2523	0.4140	0.7526E-02

Table D-3. Sensitivity analysis of stream S4A flow rate.

Molar flow rate KMOL/HR	Ester mass fraction at bottom	Reboiler duty MW
5	0.9920	4.8709
6	0.9920	4.8833
7	0.9920	4.8957
8	0.9920	4.9080
9	0.9921	4.9203
10	0.9921	4.9326
11	0.9921	4.9449
12	0.9921	4.9572
13	0.9922	4.9694
14	0.9922	4.9816
15	0.9922	4.9938
16	0.9922	5.0060
17	0.9923	5.0182
18	0.9923	5.0304
19	0.9923	5.0426
20	0.9923	5.0549

Table D-4. Column T101 results summary of the thermally coupled design (Fig. D-1).

```
BLOCK:  T101     MODEL: RADFRAC
 ------------------------------
   INLETS   - WATMET   STAGE  10
   OUTLETS  - S3A      STAGE   1
              WATA     STAGE  12
              S4A      STAGE  10
  PROPERTY OPTION SET:   NRTL      RENON (NRTL) / IDEAL GAS

                 ***  MASS AND ENERGY BALANCE  ***
                          IN            OUT        RELATIVE DIFF.
   TOTAL BALANCE
     MOLE(KMOL/HR )          203.000        203.000        0.00000
     MASS(KG/HR   )          5036.00        5036.00      -0.849896E-10
     ENTHALPY(GCAL/HR )      -10.5492       -12.5631       0.160306

                  **********************
                  ****  INPUT DATA  ****
                  **********************

  ****   INPUT PARAMETERS   ****

   NUMBER OF STAGES                                12
   ALGORITHM OPTION                                STANDARD
   ABSORBER OPTION                                 NO
   INITIALIZATION OPTION                           STANDARD
   HYDRAULIC PARAMETER CALCULATIONS                NO
   INSIDE LOOP CONVERGENCE METHOD                  BROYDEN
   DESIGN SPECIFICATION METHOD                     NESTED
   MAXIMUM NO. OF OUTSIDE LOOP ITERATIONS          25
   MAXIMUM NO. OF INSIDE LOOP ITERATIONS           10
   MAXIMUM NUMBER OF FLASH ITERATIONS              30
   FLASH TOLERANCE                                 0.000100000
   OUTSIDE LOOP CONVERGENCE TOLERANCE              0.000100000

  ****   COL-SPECS   ****

   MOLAR VAPOR DIST / TOTAL DIST                   0.0
   MOLAR REFLUX RATIO                              3.00000
   MOLAR DISTILLATE RATE        KMOL/HR            95.0000

  ****    HEATERS    ****

   STAGE HEATERS   STAGE   6  RATE, GCAL/HR        -0.51591

  ****    PROFILES   ****

   P-SPEC        STAGE   1  PRES, BAR              1.00000

                  ********************
                  ****  RESULTS  ****
                  ********************

  ***   COMPONENT SPLIT FRACTIONS   ***

                    OUTLET STREAMS
                    --------------
             S3A        WATA        S4A
   COMPONENT:
   WATER      .93200E-02   .92970      .60980E-01
   METHANOL    .98430      .11131E-01   .45734E-02
   DODECAN     0.0000      .96504       .34957E-01
   METESTER    0.0000      .87964       .12036

  ***    SUMMARY OF KEY RESULTS    ***

   TOP STAGE TEMPERATURE          C                64.3607
   BOTTOM STAGE TEMPERATURE       C                96.3447
   TOP STAGE LIQUID FLOW          KMOL/HR          191.814
   BOTTOM STAGE LIQUID FLOW       KMOL/HR          101.000
   TOP STAGE VAPOR FLOW           KMOL/HR          0.0
   BOILUP VAPOR FLOW              KMOL/HR          89.6367
   MOLAR REFLUX RATIO                              2.01909
   MOLAR BOILUP RATIO                              0.88749
   CONDENSER DUTY (W/O SUBCOOL)   GCAL/HR          -2.41582
   REBOILER DUTY                  GCAL/HR          0.91778

  ****   MANIPULATED VARIABLES   ****
```

```
                                BOUNDS          CALCULATED
                             LOWER       UPPER       VALUE
 MOLAR REFLUX RATIO                2.0000      4.0000      2.0191

 ****   DESIGN SPECIFICATIONS   ****

NO  SPEC-TYPE    QUALIFIERS          UNIT     SPECIFIED    CALCULATED
                                      VALUE       VALUE
 1  MOLE-FLOW    STREAMS: S3A        KMOL/HR    1.0000       1.0000
            COMPS:   WATER

 ****   MAXIMUM FINAL RELATIVE ERRORS   ****

  DEW POINT                  0.46735E-05  STAGE=  8
  BUBBLE POINT               0.76227E-04  STAGE= 10
  COMPONENT MASS BALANCE     0.11638E-06  STAGE=  9 COMP=DODECAN
  ENERGY BALANCE             0.91467E-05  STAGE= 11

 ****   PROFILES   ****

 **NOTE** REPORTED VALUES FOR STAGE LIQUID AND VAPOR RATES ARE THE FLOWS
       FROM THE STAGE INCLUDING ANY SIDE PRODUCT.

                             ENTHALPY
STAGE TEMPERATURE   PRESSURE          KCAL/MOL          HEAT DUTY
    C            BAR          LIQUID      VAPOR       GCAL/HR

 1   64.361      1.0000      -56.092     -47.609       -2.4158
 2   64.600      1.0000      -56.272     -47.669
 5   66.806      1.0000      -57.888     -48.202
 6   68.696      1.0000      -59.194     -48.642       -0.5159
 7   72.484      1.0000      -61.523     -49.487
 8   78.551      1.0000      -64.205     -50.827
 9   84.905      1.0000      -65.834     -52.393
10   91.457      1.0000      -66.628     -54.608
11   95.673      1.0000      -69.183     -56.340
12   96.345      1.0000      -67.010     -61.392        0.9177

STAGE     FLOW RATE              FEED RATE             PRODUCT RATE
        KMOL/HR                KMOL/HR               KMOL/HR
    LIQUID     VAPOR      LIQUID    VAPOR    MIXED     LIQUID    VAPOR
 1  286.8      0.000                          95.0000
 2  191.1      286.8
 5  184.7      282.9
 6  237.4      279.7
 7  227.3      332.4
 8  218.4      322.3
 9  200.8      313.4              203.0001
10  201.0      92.84                           7.0000
11  190.6      92.96
12  101.0      89.64                          101.0001

 ****  MASS FLOW PROFILES  ****

STAGE     FLOW RATE              FEED RATE             PRODUCT RATE
        KG/HR                  KG/HR                 KG/HR
    LIQUID     VAPOR      LIQUID    VAPOR    MIXED     LIQUID    VAPOR
 1  9148.      0.000                         3029.9783
 2  6052.      9148.
 5  5488.      8798.
 6  6673.      8518.
 7  5741.      9703.
 8  4817.      8771.
 9  4136.      7847.              5036.0040
10  3910.      2130.                           136.1913
11  4589.      1904.
12  1870.      2719.                          1869.8343

                 ****   MOLE-X-PROFILE     ****
 STAGE     WATER        METHANOL      DODECAN       METESTER
   1    0.10526E-01   0.98947       0.39704E-35   0.32053E-18
   2    0.26223E-01   0.97378       0.24714E-30   0.13818E-15
   5    0.16657       0.83343       0.86013E-17   0.19856E-08
   6    0.28029       0.71971       0.15237E-12   0.31318E-06
   7    0.48424       0.51573       0.11465E-08   0.27320E-04
   8    0.72002       0.27938       0.14105E-05   0.60008E-03
   9    0.85299       0.14415       0.25224E-03   0.26075E-02
  10    0.93471       0.62394E-01   0.24896E-03   0.26488E-02
```

11	0.93639	0.35262E-01	0.34582E-03	0.28000E-01
12	0.98766	0.10525E-01	0.47635E-03	0.13418E-02

**** MOLE-Y-PROFILE ****

STAGE	WATER	METHANOL	DODECAN	METESTER
1	0.42254E-02	0.99577	0.60987E-40	0.72059E-21
2	0.10526E-01	0.98947	0.39704E-35	0.32053E-18
5	0.67025E-01	0.93298	0.21334E-21	0.62400E-11
6	0.11358	0.88642	0.56803E-17	0.13113E-08
7	0.20319	0.79681	0.10882E-12	0.22368E-06
8	0.34463	0.65535	0.80857E-09	0.19268E-04
9	0.50499	0.49459	0.98301E-06	0.41821E-03
10	0.70033	0.29568	0.86797E-05	0.39815E-02
11	0.87718	0.11875	0.19094E-05	0.40689E-02
12	0.87863	0.63136E-01	0.19875E-03	0.58039E-01

**** K-VALUES ****

STAGE	WATER	METHANOL	DODECAN	METESTER
1	0.40141	1.0064	0.15361E-04	0.22481E-02
2	0.40140	1.0161	0.16066E-04	0.23197E-02
5	0.40237	1.1194	0.24805E-04	0.31427E-02
6	0.40519	1.2317	0.37278E-04	0.41869E-02
7	0.41961	1.5450	0.94890E-04	0.81858E-02
8	0.47864	2.3457	0.57280E-03	0.32091E-01
9	0.59203	3.4309	0.38931E-02	0.16023
10	0.74927	4.7376	0.34766E-01	1.4984
11	0.93677	3.3680	0.55202E-02	0.14528
12	0.88961	5.9989	0.41717	43.240

**** MASS-X-PROFILE ****

STAGE	WATER	METHANOL	DODECAN	METESTER
1	0.59457E-02	0.99405	0.24937E-34	0.21541E-17
2	0.14915E-01	0.98509	0.15630E-29	0.93512E-15
5	0.10102	0.89898	0.58003E-16	0.14328E-07
6	0.17963	0.82037	0.10858E-11	0.23881E-05
7	0.34543	0.65434	0.90938E-08	0.23187E-03
8	0.58822	0.40594	0.12813E-04	0.58328E-02
9	0.74614	0.22427	0.24535E-02	0.27138E-01
10	0.86550	0.10276	0.25633E-02	0.29182E-01
11	0.70084	0.46941E-01	0.28780E-02	0.24935
12	0.96109	0.18217E-01	0.51543E-02	0.15535E-0

**** MASS-Y-PROFILE ****

STAGE	WATER	METHANOL	DODECAN	METESTER
1	0.23801E-02	0.99762	0.38199E-39	0.48294E-20
2	0.59457E-02	0.99405	0.24937E-34	0.21541E-17
5	0.38823E-01	0.96118	0.13741E-20	0.43004E-10
6	0.67197E-01	0.93280	0.37370E-16	0.92310E-08
7	0.12540	0.87460	0.74676E-12	0.16424E-05
8	0.22816	0.77169	0.59524E-08	0.15177E-03
9	0.36339	0.63302	0.78657E-05	0.35806E-02
10	0.54984	0.41289	0.75774E-04	0.37193E-01
11	0.77161	0.18579	0.18676E-04	0.42586E-01
12	0.52185	0.66695E-01	0.13126E-02	0.41014

****
***** COLUMN TARGETING RESULTS *****
****

*** THERMAL ANALYSIS ***

STAGE	TEMPERATURE C	PRESSURE BAR	ENTHALPY DEFICIT GCAL/HR	EXERGY LOSS GCAL/HR	CARNOT FACTOR
1	64.361	1.0000	2.9317	0.56601E-03	0.11662
2	64.600	1.0000	2.1316	0.13296E-02	0.11725
5	66.806	1.0000	1.6600	0.42527E-02	0.12297
6	68.696	1.0000	1.6044	0.94735E-02	0.12782
7	72.484	1.0000	1.5206	0.18585E-01	0.13738
8	78.551	1.0000	1.3021	0.20869E-01	0.15226
9	84.905	1.0000	0.77721	0.21745E-01	0.16731
10	91.457	1.0000	0.68124	0.92040E-02	0.18227
11	95.673	1.0000	0.31399	0.63725E-02	0.19162
12	96.345	1.0000	0.91778	-.34424E-02	0.19309

*** HYDRAULIC ANALYSIS ***

*** MOLE BASIS ***

STAGE	VAPOR TO IDEAL MINIMUM KMOL/HR	ACTUAL KMOL/HR	HYDRAULIC MAXIMUM KMOL/HR

```
  1   0.0000          286.81          422.18
  2   95.000          286.08          421.10
  5   148.92          279.74          427.55
  6   153.72          332.40          432.96
  7   160.12          322.34          446.62
  8   179.42          313.45          466.71
  9   229.15          295.84          439.11
 10   22.891          92.961          485.11
 11   29.927          89.637          413.32
 12   0.0000          0.0000          0.0000

STAGE                LIQUID FROM
     IDEAL MINIMUM       ACTUAL       HYDRAULIC MAXIMUM
      KMOL/HR            KMOL/HR          KMOL/HR
  1   0.0000          286.81          422.18
  2   0.0000          191.08          281.26
  5   53.921          184.74          282.35
  6   58.720          237.40          309.22
  7   65.119          227.34          314.99
  8   84.424          218.45          325.26
  9   134.15          200.84          298.10
 10   130.89          200.96          1048.7
 11   130.93          190.64          879.04
 12   0.0000          101.00          465.72

       *** MASS BASIS ***

STAGE                VAPOR TO
     IDEAL MINIMUM       ACTUAL       HYDRAULIC MAXIMUM
      KG/HR              KG/HR            KG/HR
  1   0.0000          9147.8          13465.
  2   3030.0          9082.3          13369.
  5   4631.7          8517.8          13018.
  6   4680.6          9703.4          12639.
  7   4674.2          8771.3          12153.
  8   4882.4          7847.2          11684.
  9   5736.9          7166.3          10637.
 10   525.26          1903.9          9935.1
 11   612.91          2718.9          12537.
 12   0.0000          0.0000          0.0000

STAGE                LIQUID FROM
     IDEAL MINIMUM       ACTUAL       HYDRAULIC MAXIMUM
      KG/HR              KG/HR            KG/HR
  1   0.0000          6117.8          13465.
  2   0.0000          6052.3          8908.8
  5   1601.8          5487.8          8387.5
  6   1650.6          6673.5          8692.4
  7   1644.6          5741.3          7955.0
  8   1861.7          4817.2          7172.6
  9   2762.9          4136.3          6139.5
 10   2546.6          3773.7          20403.
 11   3151.5          4588.7          21159.
 12   0.0000          1869.8          8621.9

              *********************************
              ***** HYDRAULIC PARAMETERS *****
              *********************************

     *** DEFINITIONS ***

      MARANGONI INDEX = SIGMA - SIGMATO
      FLOW PARAM = (ML/MV)*SQRT(RHOV/RHOL)
      QR = QV*SQRT(RHOV/(RHOL-RHOV))
      F FACTOR = QV*SQRT(RHOV)
        WHERE:
        SIGMA IS THE SURFACE TENSION OF LIQUID FROM THE STAGE
        SIGMATO IS THE SURFACE TENSION OF LIQUID TO THE STAGE
        ML IS THE MASS FLOW OF LIQUID FROM THE STAGE
        MV IS THE MASS FLOW OF VAPOR TO THE STAGE
        RHOL IS THE MASS DENSITY OF LIQUID FROM THE STAGE
        RHOV IS THE MASS DENSITY OF VAPOR TO THE STAGE
        QV IS THE VOLUMETRIC FLOW RATE OF VAPOR TO THE STAGE

                TEMPERATURE
                   C
STAGE       LIQUID FROM       VAPOR TO
  1         64.361            64.600
  2         64.600            65.002
```

5	66.806	68.696
6	68.696	72.484
7	72.484	78.551
8	78.551	84.905
9	84.905	136.44
10	91.457	95.673
11	95.673	96.345
12	96.345	96.345

	MASS FLOW KG/HR		VOLUME FLOW CUM/HR		MOLECULAR WEIGHT	
STAGE	LIQUID FROM	VAPOR TO	LIQUID FROM	VAPOR TO	LIQUID FROM	VAPOR TO
1	9147.8	9147.8	12.278	8054.2	31.895	31.895
2	6052.3	9082.3	8.1131	8043.1	31.674	31.747
5	5487.8	8517.8	7.2607	7950.8	29.706	30.449
6	6673.5	9703.4	8.7112	9552.2	28.111	29.192
7	5741.3	8771.3	7.2561	9425.6	25.255	27.212
8	4817.2	7847.2	5.7691	9331.2	22.052	25.035
9	4136.3	7166.3	4.7822	10075.	20.595	24.224
10	3909.9	1903.9	4.4005	2850.7	19.456	20.480
11	4588.7	2718.9	5.4423	2753.7	24.070	30.332
12	1869.8	0.0000	2.0547	0.0000	18.513	

	DENSITY KG/CUM		VISCOSITY CP		SURFACE TENSION DYNE/CM	
STAGE	LIQUID FROM	VAPOR TO	LIQUID FROM	VAPOR TO	LIQUID FROM	
1	745.05	1.1358	0.34626	0.11025E-01	19.388	
2	745.99	1.1292	0.34681	0.11051E-01	20.091	
5	755.82	1.0713	0.35096	0.11281E-01	26.336	
6	766.08	1.0158	0.35318	0.11504E-01	31.336	
7	791.24	0.93058	0.35383	0.11840E-01	40.135	
8	835.00	0.84096	0.34492	0.12162E-01	49.834	
9	864.94	0.71132	0.32766	0.14074E-01	54.665	
10	888.51	0.66786	0.30674	0.12494E-01	57.046	
11	843.15	0.98734	0.30179	0.11915E-01	56.494	
12	910.01		0.29152		58.400	

	MARANGONI INDEX DYNE/CM	FLOW PARAM CUM/HR	QR (GM-L)**.5/MIN	REDUCED F-FACTOR
1		0.39044E-01	314.71	0.14306E+06
2	0.70312	0.25927E-01	313.16	0.14245E+06
5	3.1483	0.24256E-01	299.55	0.13716E+06
6	5.0001	0.25044E-01	348.07	0.16046E+06
7	8.7989	0.22448E-01	323.44	0.15154E+06
8	9.6993	0.19482E-01	296.28	0.14262E+06
9	4.8310	0.16552E-01	289.03	0.14161E+06
10	2.3805	0.56304E-01	78.185	38827.
11	-.55158	0.57754E-01	94.288	45604.
12	1.9058	0.0000	0.0000	

```
*************************************
***** TRAY SIZING CALCULATIONS *****
*************************************

********************
*** SECTION   1 ***
********************

STARTING STAGE NUMBER                    2
ENDING STAGE NUMBER                     11
FLOODING CALCULATION METHOD                 GLITSCH

DESIGN PARAMETERS
-----------------
PEAK CAPACITY FACTOR                    1.00000
SYSTEM FOAMING FACTOR                   1.00000
FLOODING FACTOR                         0.80000
MINIMUM COLUMN DIAMETER      METER          0.30480
MINIMUM DC AREA/COLUMN AREA                 0.100000
HOLE AREA/ACTIVE AREA                   0.12000

TRAY SPECIFICATIONS
-------------------
TRAY TYPE                               SIEVE
NUMBER OF PASSES                        1
TRAY SPACING                 METER      0.60960

      ***** SIZING RESULTS @ STAGE WITH MAXIMUM DIAMETER *****
```

```
STAGE WITH MAXIMUM DIAMETER                    6
COLUMN DIAMETER          METER          1.25065
DC AREA/COLUMN AREA                    0.100000
DOWNCOMER VELOCITY       M/SEC          0.019698
FLOW PATH LENGTH         METER          0.85926
SIDE DOWNCOMER WIDTH     METER          0.19570
SIDE WEIR LENGTH         METER          0.90873
CENTER DOWNCOMER WIDTH   METER          0.0
CENTER WEIR LENGTH       METER          0.0
OFF-CENTER DOWNCOMER WIDTH   METER       0.0
OFF-CENTER SHORT WEIR LENGTH METER       0.0
OFF-CENTER LONG WEIR LENGTH  METER       0.0
TRAY CENTER TO OCDC CENTER   METER       0.0

            **** SIZING PROFILES ****

  STAGE   DIAMETER    TOTAL AREA   ACTIVE AREA   SIDE DC AREA
          METER       SQM          SQM           SQM
    2     1.1754      1.0851       0.86809       0.10851
    3     1.1713      1.0775       0.86202       0.10775
    4     1.1645      1.0650       0.85203       0.10650
    5     1.1533      1.0447       0.83576       0.10447
    6     1.2506      1.2285       0.98277       0.12285
    7     1.2122      1.1540       0.92319       0.11540
    8     1.1676      1.0707       0.85658       0.10707
    9     1.1676      1.0707       0.85659       0.10707
   10     0.61474     0.29680      0.23744       0.29680E-01
   11     0.65438     0.33632      0.26905       0.33632E-01

        ************************************
        ***** TRAY RATING CALCULATIONS *****
        ************************************

********************
*** SECTION   1 ***
********************

STARTING STAGE NUMBER                    2
ENDING STAGE NUMBER                     11
FLOODING CALCULATION METHOD                 GLITSCH
PEAK CAPACITY FACTOR                 1.00000
SYSTEM FOAMING FACTOR                1.00000
OVERALL TRAY EFFICIENCY              1.00000

TRAY SPECIFICATIONS
-------------------

            !          ! !
            !     A    ! !
            ! !----------------! AA
            ! !          !
            ! !    A     !
            !----------------! ! AA
            !          ! !
            !          ! !
             SINGLE CROSSFLOW TRAY

NUMBER OF PASSES                         1
DIAMETER                 METER       1.27708
TRAY SPACING             METER       0.60960
DECK THICKNESS           METER       0.0034036
TRAY TYPE                            SIEVE
HOLE AREA/ACTIVE AREA                0.12000
HOLE DIAMETER            METER       0.012700

DOWNCOMER DIMENSIONS
--------------------
WEIR HEIGHT              METER       0.050800
DC CLEARANCE             METER       0.038100
TOP DC WIDTH             METER       0.19986

          ***** RATING RESULTS *****
DIAMETER                 METER       1.27708
STAGE-MAX FLOODING FACTOR                    6
FLOODING FACTOR                      0.76774
STAGE-MAX DC BACKUP/TRAY SPACE               6
DC BACKUP                METER       0.16045
DC BACKUP/TRAY SPACING               0.26320
STAGE-MAX DC VELOCITY                        6
```

DC VELOCITY M/SEC 0.018887
STAGE-MAX WEIRLOADING 6 (PANEL A)
WEIR LOADING SQCM/SEC 26.0760
SECTION PRESSURE DROP BAR 0.059333
MAX APPROACH TO SYSTEM LIMIT 0.48381
STAGE-MAX SYSTEM LIMIT 2

**** RATING PROFILES ****

STAGE	FLOODING FACTOR	DC VELOCITY M/SEC	DC BACKUP/ DC BACKUP METER	TRAY SPACE BAR	PRES. DROP
2	0.6794	0.1759E-01	0.1480	0.2428	0.6161E-02
3	0.6747	0.1724E-01	0.1470	0.2412	0.6116E-02
4	0.6669	0.1666E-01	0.1454	0.2386	0.6046E-02
5	0.6543	0.1574E-01	0.1429	0.2344	0.5937E-02
6	0.7677	0.1889E-01	0.1604	0.2632	0.7207E-02
7	0.7217	0.1573E-01	0.1503	0.2465	0.6789E-02
8	0.6716	0.1251E-01	0.1398	0.2294	0.6461E-02
9	0.6737	0.1037E-01	0.1360	0.2231	0.6476E-02
10	0.1916	0.9541E-02	0.1065	0.1747	0.4128E-02
11	0.2169	0.1180E-01	0.1090	0.1788	0.4011E-02

APPENDIX E: Biodiesel-Glycerol Carbonate Production Plant

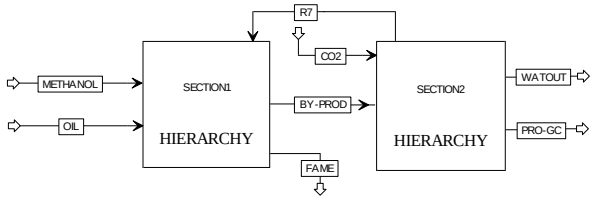

(a)

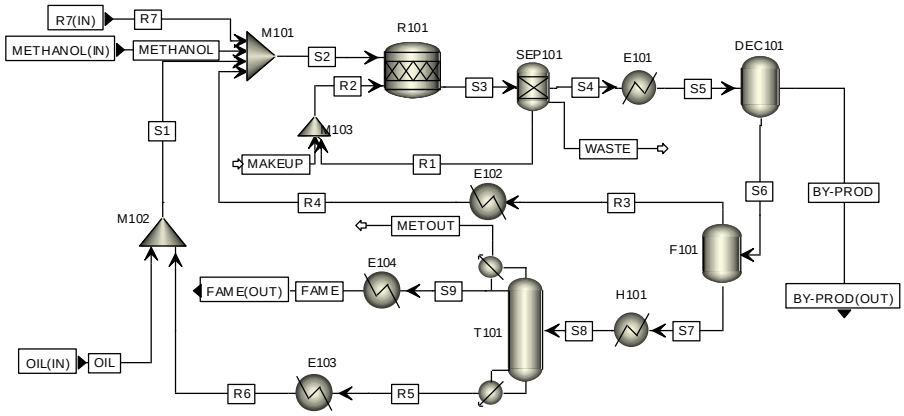

(b)

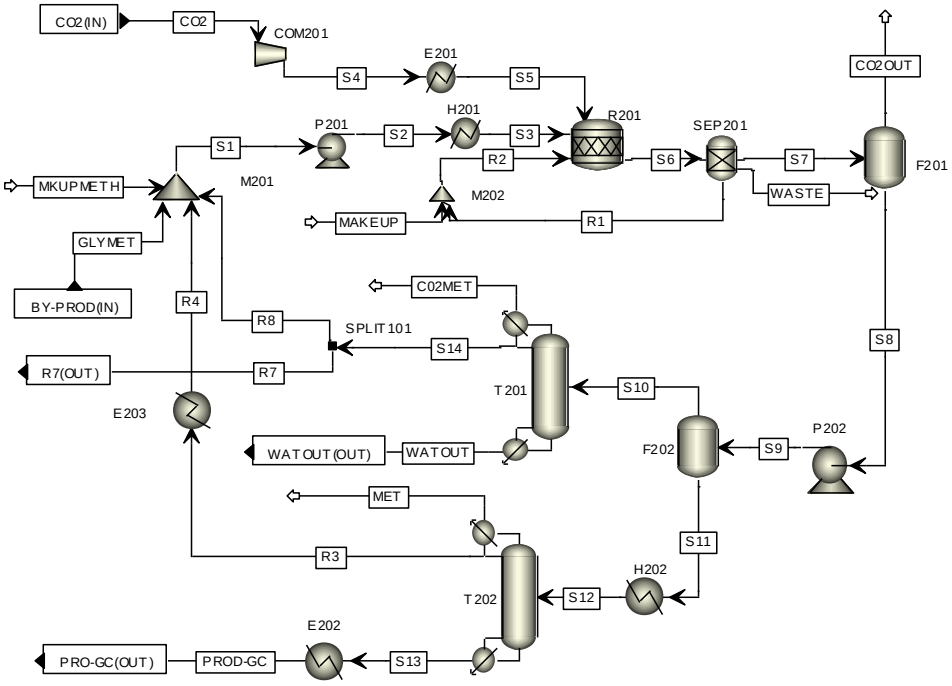

(c)

Fig. E-1. (a) Hierarchy of the novel biodiesel production plant; (b) process flow diagram of Section 1 for biodiesel and bioglycerol production plant; (c) process flow diagram of Section 2 for bioglycerol carbonate production plant.

Table E-1. Input summary of the novel plant (Fig. E-1).

```
;Input Summary created by Aspen Plus Rel. 25.0 at 20:32:07 Wed May 9, 2012

COMPONENTS
   METHANOL CH4O /
   OIL C57H104O6 /
   FAME C19H36O2 /
   GLYCEROL C3H8O3 /
   WATER H2O /
   CA3LA1 H2O /
   CO2 CO2 /
   GC C4H6O4-N1 /
   N-BU2SN0 H2O

HENRY-COMPS HC-1 CO2

FLOWSHEET
   HIERARCHY SECTION1
   CONNECT $C-8 IN=OIL OUT="SECTION1.OIL"
   CONNECT $C-9 IN=METHANOL OUT="SECTION1.METHANOL"
   CONNECT $C-7 IN=R7 OUT="SECTION1.R7"
   CONNECT $C-1 IN="SECTION1.BY-PROD" OUT=BY-PROD
   CONNECT $C-10 IN="SECTION1.FAME" OUT=FAME
   HIERARCHY SECTION2
   CONNECT $C-2 IN=BY-PROD OUT="SECTION2.GLYMET"
   CONNECT $C-3 IN=CO2 OUT="SECTION2.CO2"
   CONNECT $C-4 IN="SECTION2.WATOUT" OUT=WATOUT
   CONNECT $C-6 IN="SECTION2.R7" OUT=R7
   CONNECT $C-5 IN="SECTION2.PROD-GC" OUT=PRO-GC

PROPERTIES UNIF-DMD TRUE-COMPS=YES
   PROPERTIES NRTL-RK

PROP-DATA
   PROP-LIST ATOMNO / NOATOM
   PVAL CO2 6 8 / 1. 2.

STRUCTURES
   STRUCTURES GC O1 C2 S / C2 O3 S / C2 O6 D / O3 C4  &
      S / C4 C5 S / C4 C7 S / C5 O1 S / C7 O8 S

PROP-DATA
   PROP-LIST ATOMNO / NOATOM
   PVAL GC 6 1 8 / 4. 6. 4.

PROP-DATA
   PROP-LIST ATOMNO / NOATOM
   PVAL GLYCEROL 6 1 8 / 3. 8. 3.

STRUCTURES
   UNIFAC OIL 1005 1 / 1010 41 / 1015 3 / 1200 1 /  &
      1500 3 / 1065 3

PROP-DATA
   PROP-LIST ATOMNO / NOATOM
   PVAL WATER 1 8 / 2. 1.

STREAM CO2
   SUBSTREAM MIXED TEMP=25. PRES=1.
   MOLE-FLOW CO2 6.22

STREAM METHANOL
   SUBSTREAM MIXED TEMP=25. PRES=1.
   MOLE-FLOW METHANOL 32.8

STREAM OIL
   SUBSTREAM MIXED TEMP=25. PRES=1.
   MOLE-FLOW OIL 7.0080949

HIERARCHY SECTION1

DEF-STREAMS CONVEN ALL

SOLVE
   PARAM METHOD=SM
   RUN-MODE MODE=SIM

FLOWSHEET
```

```
   BLOCK SEP101 IN=S3 OUT=S4 R1 WASTE
   BLOCK R101 IN=S2 R2 OUT=S3
   BLOCK M102 IN=OIL R6 OUT=S1
   BLOCK M101 IN=METHANOL S1 R4 R7 OUT=S2
   BLOCK E101 IN=S4 OUT=S5
   BLOCK DEC101 IN=S5 OUT=BY-PROD S6
   BLOCK M103 IN=R1 MAKEUP OUT=R2
   BLOCK E103 IN=R5 OUT=R6
   BLOCK T101 IN=S8 OUT=METOUT S9 R5
   BLOCK F101 IN=S6 OUT=R3 S7
   BLOCK E102 IN=R3 OUT=R4
   BLOCK H101 IN=S7 OUT=S8
   BLOCK E104 IN=S9 OUT=FAME

PROPERTIES UNIF-DMD FREE-WATER=STEAM-TA SOLU-WATER=3  &
      TRUE-COMPS=YES
   PROPERTIES NRTL-RK

STREAM MAKEUP
   SUBSTREAM MIXED TEMP=80. PRES=138.
   MASS-FLOW CA3LA1 32.118

STREAM R1
   SUBSTREAM MIXED TEMP=58. PRES=1.
   MASS-FLOW CA3LA1 227.56

STREAM R3
   SUBSTREAM MIXED TEMP=158.2601 PRES=0.5
   MOLE-FLOW METHANOL 17.19533 / OIL 0.00464358 / FAME 0.05 / &
      GLYCEROL 0.00160103 / WATER 0.00489534 / CO2  &
      0.0294493

STREAM R5
   SUBSTREAM MIXED TEMP=246.6824 PRES=0.05
   MOLE-FLOW OIL 0.2425142 / FAME 0.29

BLOCK M101 MIXER
   PARAM NPHASE=2
   BLOCK-OPTION FREE-WATER=NO

BLOCK M102 MIXER
   PARAM NPHASE=2
   BLOCK-OPTION FREE-WATER=NO

BLOCK M103 MIXER
   PARAM NPHASE=2
   BLOCK-OPTION FREE-WATER=NO

BLOCK SEP101 SEP
   PARAM
   FRAC STREAM=S4 SUBSTREAM=MIXED COMPS=METHANOL OIL FAME  &
      GLYCEROL WATER CO2 GC N-BU2SN0 FRACS=1. 1. 1. 1. 1.  &
      1. 1. 1.
   FRAC STREAM=R1 SUBSTREAM=MIXED COMPS=CA3LA1 FRACS=0.9
   UTILITY UTILITY-ID=ELECTRIC

BLOCK E101 HEATER
   PARAM TEMP=25. PRES=1. NPHASE=2
   BLOCK-OPTION FREE-WATER=NO
   UTILITY UTILITY-ID=CW

BLOCK E102 HEATER
   PARAM TEMP=25. PRES=1. NPHASE=2
   BLOCK-OPTION FREE-WATER=NO
   UTILITY UTILITY-ID=CW

BLOCK E103 HEATER
   PARAM TEMP=25. PRES=1. NPHASE=2
   BLOCK-OPTION FREE-WATER=NO
   UTILITY UTILITY-ID=CW

BLOCK E104 HEATER
   PARAM TEMP=25. PRES=1. NPHASE=2
   BLOCK-OPTION FREE-WATER=NO
   UTILITY UTILITY-ID=CW

BLOCK H101 HEATER
   PARAM TEMP=200. PRES=0.5 NPHASE=2
   BLOCK-OPTION FREE-WATER=NO
```

```
   UTILITY UTILITY-ID=ST-1BAR

BLOCK F101 FLASH2
   PARAM TEMP=150. PRES=0.5 MAXIT=50 TOL=0.001
   UTILITY UTILITY-ID=ST-1BAR

BLOCK DEC101 DECANTER
   PARAM TEMP=25. PRES=1. L2-COMPS=FAME
   UTILITY UTILITY-ID=ELECTRIC

BLOCK T101 RADFRAC
   PARAM NSTAGE=7
   COL-CONFIG CONDENSER=PARTIAL-V-L
   FEEDS S8 3
   PRODUCTS S9 1 L / R5 7 L / METOUT 1 V
   P-SPEC 1 0.05
   COL-SPECS MOLE-RDV=0.02 MOLE-D=21. MOLE-RR=3.
   T-EST 1 174.99 / 2 237.24 / 3 237.66 / 4 238.15 / 5  &
      239.18 / 6 241.45 / 7 246.68
   SPEC 1 MOLE-FLOW 0.29 COMPS=FAME STREAMS=R5
   SPEC 2 MOLE-FLOW 0.04 COMPS=FAME STREAMS=METOUT
   VARY 1 MOLE-D 20. 22.
   VARY 2 MOLE-RDV 0.01 0.03
   PROPERTIES NRTL-RK FREE-WATER=STEAM-TA SOLU-WATER=3  &
      TRUE-COMPS=YES
   REPORT TARGET HYDANAL
   UTILITIES COND-UTIL=CW REB-UTIL=ST-1BAR

BLOCK R101 RSTOIC
   PARAM TEMP=58. PRES=1.
   STOIC 1 MIXED OIL -1. / METHANOL -3. / GLYCEROL 1. /  &
      FAME 3.
   CONV 1 MIXED OIL 0.943
   UTILITY UTILITY-ID=ELECTRIC

EO-CONV-OPTI
   PARAM SOLVER=NSOLVE
   SM-INIT MAXFITER=60

ENDHIERARCHY SECTION1

HIERARCHY SECTION2

DEF-STREAMS CONVEN ALL

SOLVE
   PARAM METHOD=SM
   RUN-MODE MODE=SIM

FLOWSHEET
   BLOCK COM201 IN=CO2 OUT=S4
   BLOCK E201 IN=S4 OUT=S5
   BLOCK M201 IN=GLYMET MKUPMETH R8 R4 OUT=S1
   BLOCK P201 IN=S1 OUT=S2
   BLOCK H201 IN=S2 OUT=S3
   BLOCK R201 IN=S5 S3 R2 OUT=S6
   BLOCK SEP201 IN=S6 OUT=S7 WASTE R1
   BLOCK M202 IN=MAKEUP R1 OUT=R2
   BLOCK F201 IN=S7 OUT=CO2OUT S8
   BLOCK F202 IN=S9 OUT=S10 S11
   BLOCK P202 IN=S8 OUT=S9
   BLOCK T201 IN=S10 OUT=C02MET S14 WATOUT
   BLOCK T202 IN=S12 OUT=MET R3 S13
   BLOCK E203 IN=R3 OUT=R4
   BLOCK H202 IN=S11 OUT=S12
   BLOCK E202 IN=S13 OUT=PROD-GC
   BLOCK SPLIT101 IN=S14 OUT=R8 R7

PROPERTIES UNIF-DMD FREE-WATER=STEAM-TA SOLU-WATER=3  &
      TRUE-COMPS=YES
   PROPERTIES NRTL-RK

STREAM MAKEUP
   SUBSTREAM MIXED TEMP=120. PRES=35.
   MOLE-FLOW N-BU2SN0 0.01733611

STREAM MKUPMETH
   SUBSTREAM MIXED TEMP=25. PRES=1.
   MOLE-FLOW METHANOL 1.7564349
```

```
STREAM R1
   SUBSTREAM MIXED TEMP=80. PRES=138.
   MOLE-FLOW N-BU2SN0 0.1355005

STREAM R3
   SUBSTREAM MIXED TEMP=134.6526 PRES=0.01
   MOLE-FLOW METHANOL 0.0212898 / FAME 0.00038374 / GLYCEROL  &
      14. / WATER 0.000232 / CO2 1.408E-007 / GC 0.07

STREAM R7
   SUBSTREAM MIXED TEMP=64.29 PRES=1.
   MOLE-FLOW METHANOL 95.56545 / WATER 0.4 / CO2 0.0047

STREAM S14
   SUBSTREAM MIXED TEMP=63.83607 PRES=1.
   MOLE-FLOW METHANOL 223.9605 / WATER 0.45 / CO2 0.0930536

BLOCK M201 MIXER
   PARAM NPHASE=2
   BLOCK-OPTION FREE-WATER=NO

BLOCK M202 MIXER

BLOCK SPLIT101 FSPLIT
   MOLE-FLOW R7 95.76545

BLOCK SEP201 SEP
   FRAC STREAM=S7 SUBSTREAM=MIXED COMPS=METHANOL OIL FAME  &
      GLYCEROL WATER CA3LA1 CO2 GC FRACS=1. 1. 1. 1. 1.  &
      1. 1. 1.
   FRAC STREAM=WASTE SUBSTREAM=MIXED COMPS=N-BU2SN0 FRACS= &
      0.1
   BLOCK-OPTION FREE-WATER=NO
   UTILITY UTILITY-ID=ELECTRIC

BLOCK E201 HEATER
   PARAM TEMP=120. PRES=13.8 <MPa> NPHASE=2
   BLOCK-OPTION FREE-WATER=NO
   UTILITY UTILITY-ID=CW

BLOCK E202 HEATER
   PARAM TEMP=25. PRES=1. NPHASE=2
   BLOCK-OPTION FREE-WATER=NO
   UTILITY UTILITY-ID=CW

BLOCK E203 HEATER
   PARAM TEMP=25. PRES=1. NPHASE=2
   BLOCK-OPTION FREE-WATER=NO
   UTILITY UTILITY-ID=CW

BLOCK H201 HEATER
   PARAM TEMP=120. PRES=138. NPHASE=2
   BLOCK-OPTION FREE-WATER=NO
   UTILITY UTILITY-ID=ST-35BAR

BLOCK H202 HEATER
   PARAM TEMP=160. PRES=1. NPHASE=2
   BLOCK-OPTION FREE-WATER=NO
   UTILITY UTILITY-ID=ST-1BAR

BLOCK F201 FLASH2
   PROPERTIES UNIF-DMD FREE-WATER=STEAM-TA SOLU-WATER=3  &
      TRUE-COMPS=YES
   BLOCK-OPTION FREE-WATER=NO
   UTILITY UTILITY-ID=CW

BLOCK F202 FLASH2
   PARAM TEMP=140. PRES=1. NPHASE=2
   BLOCK-OPTION FREE-WATER=NO
   UTILITY UTILITY-ID=ST-1BAR

BLOCK T201 RADFRAC
   PARAM NSTAGE=7 MAXOL=100 NPHASE=2
   COL-CONFIG CONDENSER=PARTIAL-V-L
   FEEDS S10 5
   PRODUCTS WATOUT 7 L / C02MET 1 V / S14 1 L
   P-SPEC 1 1.
   COL-SPECS MOLE-RDV=0.06 MOLE-B=6.7 MOLE-RR=3.5
```

```
   T-EST 1 63.84 / 2 64.46 / 3 64.84 / 4 65.94 / 5  &
      69.56 / 6 78.05 / 7 90.97
   SPEC 1 MOLE-FLOW 0.45 COMPS=WATER STREAMS=S14
   SPEC 2 MOLE-FLOW 5. COMPS=METHANOL STREAMS=C02MET
   VARY 1 MOLE-B 6. 7.
   VARY 2 MOLE-RDV 0.02 0.1
   TRAY-SIZE 1 2 6 SIEVE
   TRAY-RATE 1 2 6 SIEVE DIAM=1.5 P-UPDATE=NO
   PROPERTIES NRTL-RK FREE-WATER=STEAM-TA SOLU-WATER=3  &
      TRUE-COMPS=YES
   BLOCK-OPTION FREE-WATER=NO
   REPORT TARGET HYDANAL
   UTILITIES COND-UTIL=CW REB-UTIL=ST-1BAR

BLOCK T202 RADFRAC
   PARAM NSTAGE=15 MAXOL=200 NPHASE=2 DAMPING=MEDIUM
   COL-CONFIG CONDENSER=PARTIAL-V-L
   FEEDS S12 10
   PRODUCTS R3 1 L / S13 15 L / MET 1 V
   P-SPEC 1 0.01
   COL-SPECS MOLE-RDV=0.22 MOLE-B=5.5 MOLE-RR=2.
   T-EST 1 246.7 / 2 286.9 / 3 288.1 / 4 288.4 / 5  &
      288.8 / 6 289.3 / 7 290. / 8 291. / 9 292.4 /  &
      10 294.2 / 11 299.1 / 12 304.6
   SPEC 1 MOLE-FLOW 14. COMPS=GLYCEROL STREAMS=R3
   SPEC 2 MOLE-FLOW 0.07 COMPS=GC STREAMS=R3
   VARY 1 MOLE-B 5. 6.5
   VARY 2 MOLE-RR 1.5 3.5
   BLOCK-OPTION FREE-WATER=NO
   REPORT TARGET HYDANAL
   UTILITIES COND-UTIL=CW REB-UTIL=ST-1BAR

BLOCK R201 RSTOIC
   PARAM TEMP=120. PRES=138. NPHASE=3
   STOIC 1 MIXED GLYCEROL -1. / CO2 -1. / GC 1. / WATER  &
      1.
   CONV 1 MIXED GLYCEROL 0.25
   BLOCK-OPTION FREE-WATER=NO
   UTILITY UTILITY-ID=ELECTRIC

BLOCK P201 PUMP
   PARAM PRES=13.8 <MPa>
   UTILITY UTILITY-ID=ELECTRIC

BLOCK P202 PUMP
   PARAM PRES=1.
   UTILITY UTILITY-ID=ELECTRIC

BLOCK COM201 COMPR
   PARAM TYPE=GPSA-ISENTROP PRES=35.
   UTILITY UTILITY-ID=ELECTRIC

ENDHIERARCHY SECTION2

UTILITY CW GENERAL
   COST PRICE=2.2215E-005 <$/kg>
   PARAM UTILITY-TYPE=WATER COOLING-VALU=-105. CALOPT=DUTY

UTILITY ELECTRIC GENERAL
   COST ELEC-PRICE=0.06664495 <$/kWhr>
   PARAM UTILITY-TYPE=ELECTRICITY

UTILITY ST-1BAR GENERAL
   COST PRICE=0.00237034 <$/kg>
   PARAM UTILITY-TYPE=STEAM COOLING-VALU=2676.

UTILITY ST-35BAR GENERAL
   COST PRICE=0.01656735
   PARAM UTILITY-TYPE=STEAM COOLING-VALU=3340. <kJ/kg>

DESIGN-SPEC DS-1
   DEFINE CO2F MOLE-FLOW STREAM="SECTION2.S8" SUBSTREAM=MIXED  &
      COMPONENT=CO2
   SPEC "CO2F" TO "0.2"
   TOL-SPEC "0.00001"
   VARY BLOCK-VAR BLOCK="SECTION2.F201" VARIABLE=PRES  &
      SENTENCE=PARAM
   LIMITS "0.14" "0.25"
```

```
DESIGN-SPEC DS-2
   DEFINE FAMEF MOLE-FLOW STREAM="SECTION1.R3" SUBSTREAM=MIXED  &
      COMPONENT=FAME
   SPEC "FAMEF" TO "0.05"
   TOL-SPEC "0.00000001"
   VARY BLOCK-VAR BLOCK="SECTION1.F101" VARIABLE=TEMP  &
      SENTENCE=PARAM
   LIMITS "100" "200"

EO-CONV-OPTI

CONV-OPTIONS
   PARAM TOL=0.01
   WEGSTEIN MAXIT=100

TEAR
   TEAR "SECTION1.R1" / "SECTION2.R1" / "SECTION1.R3" /  &
      "SECTION1.R5" / "SECTION2.S14" / "SECTION2.R7" /  &
      "SECTION2.R3"
```

Table E-2. Compressor COM201 results summary of the novel plant (Fig. E-1c).

```
BLOCK:  COM201   MODEL: COMPR
 ----------------------------
  INLET STREAM:         CO2
  OUTLET STREAM:        S4
  PROPERTY OPTION SET:   UNIF-DMD  DORTMUND MOD. UNIFAC / REDLICH-KWONG-SOAVE

                 ***  MASS AND ENERGY BALANCE  ***
                            IN            OUT       RELATIVE DIFF.
   TOTAL BALANCE
     MOLE(KMOL/HR )          6.22000        6.22000        0.00000
     MASS(KG/HR   )          273.741        273.741        0.00000
     ENTHALPY(WATT    )      -680414.       -648006.       -0.476290E-01

                 ***  CO2 EQUIVALENT SUMMARY ***
   FEED STREAMS CO2E            273.741     KG/HR
   PRODUCT STREAMS CO2E         273.741     KG/HR
   NET STREAMS CO2E PRODUCTION   0.00000     KG/HR
   UTILITIES CO2E PRODUCTION     0.00000     KG/HR
   TOTAL CO2E PRODUCTION         0.00000     KG/HR

                    ***  INPUT DATA  ***

  ISENTROPIC COMPRESSOR USING GPSA METHOD
   OUTLET PRESSURE  BAR                          35.0000
   ISENTROPIC EFFICIENCY                         0.72000
   MECHANICAL EFFICIENCY                          1.00000

                    ***  RESULTS  ***

   INDICATED  HORSEPOWER REQUIREMENT  WATT            32,407.4
   BRAKE      HORSEPOWER REQUIREMENT  WATT            32,407.4
   NET WORK REQUIRED                  WATT            32,407.4
   POWER LOSSES                       WATT            0.0
   ISENTROPIC HORSEPOWER REQUIREMENT  WATT            22,356.9
   CALCULATED OUTLET TEMP  C                          448.815
   ISENTROPIC TEMPERATURE  C                          332.877
   EFFICIENCY (POLYTR/ISENTR) USED                     0.72000
   OUTLET VAPOR FRACTION                              1.00000
   HEAD DEVELOPED,       J/KG                      306,860.
   MECHANICAL EFFICIENCY USED                          1.00000
   INLET HEAT CAPACITY RATIO                          1.29467
   INLET VOLUMETRIC FLOW RATE , GAL/HR                40,530.7
   OUTLET VOLUMETRIC FLOW RATE, GAL/HR                2,842.89
   INLET  COMPRESSIBILITY FACTOR                      0.99505
   OUTLET COMPRESSIBILITY FACTOR                       1.00880
   AV. ISENT. VOL. EXPONENT                          1.25228
   AV. ISENT. TEMP EXPONENT                          1.24923
   AV. ACTUAL VOL. EXPONENT                           1.33799
   AV. ACTUAL TEMP EXPONENT                           1.33111

                 ***  ASSOCIATED  UTILITIES  ***

  UTILITY ID FOR ELECTRICITY            ELECTRIC
  RATE OF CONSUMPTION                 3.2407+04  WATT
  COST                          5.9994-04  $/SEC
```

Table E-3. Reactor R201 results summary of the novel plant (Fig. E-1c).

```
BLOCK:  R201     MODEL: RSTOIC
 ------------------------------
  INLET STREAMS:        S5         S3         R2
  OUTLET STREAM:        S6
  PROPERTY OPTION SET:   UNIF-DMD  DORTMUND MOD. UNIFAC / REDLICH-KWONG-SOAVE

                 ***  MASS AND ENERGY BALANCE  ***
                        IN         OUT       GENERATION   RELATIVE DIFF.
  TOTAL BALANCE
  MOLE(KMOL/HR )        265.556      265.556      0.00000      0.214055E-15
  MASS(KG/HR   )        9871.30      9871.30                   -0.184271E-15
  ENTHALPY(WATT    )   -0.195715E+08 -0.196032E+08              0.161828E-02

                 ***  CO2 EQUIVALENT SUMMARY ***
   FEED STREAMS CO2E            277.826     KG/HR
   PRODUCT STREAMS CO2E         48.5779     KG/HR
   NET STREAMS CO2E PRODUCTION  -229.248     KG/HR
   UTILITIES CO2E PRODUCTION     0.00000      KG/HR
   TOTAL CO2E PRODUCTION        -229.248     KG/HR

                    ***  INPUT DATA  ***
  STOICHIOMETRY MATRIX:

   REACTION #   1:
    SUBSTREAM MIXED   :
    GLYCEROL  -1.00    WATER      1.00    CO2       -1.00    GC         1.00


  REACTION CONVERSION SPECS: NUMBER=    1
    REACTION #   1:
    SUBSTREAM:MIXED    KEY COMP:GLYCEROL CONV FRAC: 0.2500

  THREE  PHASE  TP  FLASH
  SPECIFIED TEMPERATURE C                          120.000
  SPECIFIED PRESSURE    BAR                       138.000
  MAXIMUM NO. ITERATIONS                           30
  CONVERGENCE TOLERANCE                              0.000100000

  SIMULTANEOUS REACTIONS
  GENERATE COMBUSTION REACTIONS FOR FEED SPECIES         NO

                    ***  RESULTS  ***
  OUTLET TEMPERATURE    C                          120.00
  OUTLET PRESSURE       BAR                       138.00
  HEAT DUTY             WATT                     -31724.
  VAPOR FRACTION                                 0.0000
  1ST LIQUID/TOTAL LIQUID                          1.0000

  REACTION EXTENTS:

    REACTION         REACTION
    NUMBER           EXTENT
                   KMOL/HR
    1                5.2090

  V-L1-L2 PHASE EQUILIBRIUM :

    COMP          F(I)      X1(I)     X2(I)     Y(I)      K1(I)     K2(I)
    METHANOL      0.895     0.895     0.895     0.883     0.408E-01 0.408E-01
    OIL           0.140E-08 0.140E-08 0.140E-08 0.573E-01 0.169E+07 0.169E+07
    FAME          0.543E-03 0.543E-03 0.543E-03 0.207E-03 0.158E-01 0.158E-01
    GLYCEROL      0.588E-01 0.588E-01 0.588E-01 0.183E-04 0.129E-04 0.129E-04
    WATER         0.213E-01 0.213E-01 0.213E-01 0.113E-01 0.220E-01 0.220E-01
    CO2           0.416E-02 0.416E-02 0.416E-02 0.477E-01 0.474     0.474
    GC            0.199E-01 0.199E-01 0.199E-01 0.713E-05 0.148E-04 0.148E-04
    N-BU2SN0      0.625E-03 0.625E-03 0.625E-03 0.332E-03 0.220E-01 0.220E-01

                 ***  ASSOCIATED  UTILITIES  ***

 UTILITY ID FOR ELECTRICITY            ELECTRIC
 RATE OF CONSUMPTION                 3.1724+04  WATT
 COST                          5.8728-04
```

Table E-4. Design specifications.

```
DESIGN-SPEC:  DS-1
------------------
  SAMPLED VARIABLES:
    CO2F     : CO2 MOLEFLOW IN STREAM SECTION2.S8 SUBSTREAM MIXED

  SPECIFICATION:
    MAKE CO2F APPROACH 0.20000
    WITHIN          0.100000-04

  MANIPULATED VARIABLES:
    VARY     : SENTENCE=PARAM VARIABLE=PRES IN UOS BLOCK SECTION2.F201
    LOWER LIMIT =          0.14000                BAR
    UPPER LIMIT =          0.25000                BAR
    FINAL VALUE =          0.18094                BAR

  VALUES OF ACCESSED FORTRAN VARIABLES:
    VARIABLE      VALUE AT START      FINAL VALUE     UNITS
                  OF LOOP
    --------      --------------      -----------     -----
    CO2F          0.199991            0.199991        KMOL/HR

DESIGN-SPEC:  DS-2
------------------

  SAMPLED VARIABLES:
    FAMEF    : FAME MOLEFLOW IN STREAM SECTION1.R3 SUBSTREAM MIXED

  SPECIFICATION:
    MAKE FAMEF APPROACH 0.050000
    WITHIN          0.100000-07

  MANIPULATED VARIABLES:
    VARY     : SENTENCE=PARAM VARIABLE=TEMP IN UOS BLOCK SECTION1.F101
    LOWER LIMIT =         100.000                C
    UPPER LIMIT =         200.000                C
    FINAL VALUE =         158.260                C

  VALUES OF ACCESSED FORTRAN VARIABLES:
    VARIABLE      VALUE AT START      FINAL VALUE     UNITS
                  OF LOOP
    --------      --------------      -----------     -----
    FAMEF         0.499996E-01        0.500000E-01    KMOL/HR
```

Table E-5. Flash drum F201 summary of the novel plant (Fig. E-1c).

```
BLOCK:  F201     MODEL: FLASH2
 ------------------------------
  INLET STREAM:         S7
  OUTLET VAPOR STREAM:   CO2OUT
  OUTLET LIQUID STREAM:  S8
  PROPERTY OPTION SET:   UNIF-DMD  DORTMUND MOD. UNIFAC / REDLICH-KWONG-SOAVE

                 ***  MASS AND ENERGY BALANCE  ***
                            IN            OUT       RELATIVE DIFF.
   TOTAL BALANCE
     MOLE(KMOL/HR )          265.252        265.252        0.00000
     MASS(KG/HR   )          9863.91        9863.91       -0.239731E-14
     ENTHALPY(WATT    )     -0.199991E+08   -0.204634E+08    0.226918E-01

                   ***  INPUT DATA  ***
  TWO    PHASE  TP  FLASH
  SPECIFIED TEMPERATURE C                          25.0000
  SPECIFIED PRESSURE    BAR                       0.18095
  MAXIMUM NO. ITERATIONS                          100
  CONVERGENCE TOLERANCE                              0.000100000

                    ***  RESULTS  ***
  OUTLET TEMPERATURE    C                          25.000
  OUTLET PRESSURE       BAR                       0.18095
  HEAT DUTY             WATT                     -0.46435E+06
  VAPOR FRACTION                                 0.19186E-01

  V-L PHASE EQUILIBRIUM :

    COMP            F(I)          X(I)          Y(I)          K(I)
    METHANOL        0.89514       0.89671       0.81535       0.90927
    OIL             0.14052E-08    0.68180E-11    0.72894E-07     10692.
    FAME            0.54365E-03    0.55428E-03    0.25978E-07    0.46868E-04
    GLYCEROL        0.58914E-01    0.60066E-01    0.96544E-07    0.16073E-05
    WATER           0.21335E-01    0.21614E-01    0.70662E-02    0.32693
    CO2             0.41612E-02    0.76873E-03    0.17759        231.01
    GC              0.19902E-01    0.20291E-01    0.24372E-07    0.12011E-05

                 ***  ASSOCIATED  UTILITIES  ***

 UTILITY ID FOR WATER                        CW
 RATE OF CONSUMPTION                    1.5921+04  KG/HR
 COST                           9.8244-05  $/SEC
```

Table E-6. Flash drum F202 results summary of the novel plant (Fig. E-1c).

```
BLOCK:  F202     MODEL: FLASH2
 ------------------------------
  INLET STREAM:         S9
  OUTLET VAPOR STREAM:   S10
  OUTLET LIQUID STREAM:  S11
  PROPERTY OPTION SET:   UNIF-DMD  DORTMUND MOD. UNIFAC / REDLICH-KWONG-SOAVE

                 ***  MASS AND ENERGY BALANCE  ***
                           IN            OUT       RELATIVE DIFF.

   TOTAL BALANCE
     MOLE(KMOL/HR )          260.163        260.163        0.00000
     MASS(KG/HR   )          9690.53        9690.53        0.303317E-11
     ENTHALPY(WATT    )     -0.201295E+08   -0.170960E+08   -0.150699

                    ***  INPUT DATA  ***
  TWO    PHASE  TP  FLASH
  SPECIFIED TEMPERATURE C                          140.000
  SPECIFIED PRESSURE    BAR                        1.00000
  MAXIMUM NO. ITERATIONS                            30
  CONVERGENCE TOLERANCE                               0.000100000

                     ***  RESULTS  ***
  OUTLET TEMPERATURE    C                           140.00
  OUTLET PRESSURE       BAR                        1.0000
  HEAT DUTY             WATT                      0.30335E+07
  VAPOR FRACTION                                  0.90844

  V-L PHASE EQUILIBRIUM :

    COMP            F(I)          X(I)          Y(I)          K(I)
    METHANOL        0.89671       0.13679       0.97330       7.1152
    OIL             0.68180E-11   0.25247E-16   0.75052E-11   0.29727E+06
    FAME            0.55428E-03   0.50796E-03   0.55895E-03   1.1004
    GLYCEROL        0.60066E-01   0.64137       0.14776E-02   0.23039E-02
    WATER           0.21614E-01   0.22222E-02   0.23568E-01   10.606
    CO2             0.76873E-03   0.15507E-04   0.84465E-03   54.470
    GC              0.20291E-01   0.21910       0.25379E-03   0.11584E-02

                 ***  ASSOCIATED  UTILITIES  ***

 UTILITY ID FOR STEAM                   ST-1BAR
 RATE OF CONSUMPTION                    4080.9347  KG/HR
 COST                          2.6870-03  $/SEC
```

Table E-7. Column T201 results summary of the novel plant (Fig. E-1c).

```
BLOCK:  T201     MODEL: RADFRAC
 -------------------------------
   INLETS   - S10      STAGE   5
   OUTLETS  - C02MET   STAGE   1
              S14      STAGE   1
              WATOUT   STAGE   7
  PROPERTY OPTION SET:   NRTL-RK   RENON (NRTL) / REDLICH-KWONG

                 ***  MASS AND ENERGY BALANCE  ***
                            IN            OUT       RELATIVE DIFF.
   TOTAL BALANCE
     MOLE(KMOL/HR )          236.342        236.344       -0.759721E-05
     MASS(KG/HR   )          7558.25        7558.31       -0.761249E-05
     ENTHALPY(WATT    )      -0.129920E+08   -0.155240E+08    0.163100

                  **********************
                  ****  INPUT DATA  ****
                  **********************

  ****   INPUT PARAMETERS   ****

   NUMBER OF STAGES                                    7
   ALGORITHM OPTION                                    STANDARD
   ABSORBER OPTION                                     NO
   INITIALIZATION OPTION                               STANDARD
   HYDRAULIC PARAMETER CALCULATIONS                    NO
   INSIDE LOOP CONVERGENCE METHOD                      BROYDEN
   DESIGN SPECIFICATION METHOD                         NESTED
   MAXIMUM NO. OF OUTSIDE LOOP ITERATIONS              100
   MAXIMUM NO. OF INSIDE LOOP ITERATIONS               10
   MAXIMUM NUMBER OF FLASH ITERATIONS                  30
   FLASH TOLERANCE                                     0.000100000
   OUTSIDE LOOP CONVERGENCE TOLERANCE                  0.000100000

  ****   COL-SPECS   ****

   MOLAR VAPOR DIST / TOTAL DIST                       0.060000
   MOLAR REFLUX RATIO                                  3.50000
   MOLAR BOTTOMS RATE          KMOL/HR                 6.70000

  ****    PROFILES   ****

   P-SPEC         STAGE   1  PRES, BAR                 1.00000

   TEMP-EST       STAGE   1  TEMP, C                   63.8400
                  2                      64.4600
                  3                      64.8400
                  4                      65.9400
                  5                      69.5600
                  6                      78.0500
                  7                      90.9700

                  ********************
                  ****  RESULTS  ****
                  ********************

  ***   COMPONENT SPLIT FRACTIONS   ***

                     OUTLET STREAMS
                     --------------
             C02MET       S14          WATOUT
   COMPONENT:
   METHANOL    .21736E-01   .97300       .52642E-02
   OIL         .13512E-12   .31640E-08   1.0000
   FAME        0.0000       0.0000       1.0000
   GLYCEROL    0.0000       .18325E-14   1.0000
   WATER       .44076E-03   .80787E-01   .91877
   CO2         .53385       .46615       .76234E-09
   GC          0.0000       0.0000       1.0000


  ***    SUMMARY OF KEY RESULTS    ***

   TOP STAGE TEMPERATURE          C                    63.8358
   BOTTOM STAGE TEMPERATURE       C                    90.9738
   TOP STAGE LIQUID FLOW          KMOL/HR              803.154
   BOTTOM STAGE LIQUID FLOW       KMOL/HR              6.87003
```

```
TOP STAGE VAPOR FLOW          KMOL/HR              5.10903
BOILUP VAPOR FLOW            KMOL/HR              701.204
MOLAR REFLUX RATIO                              3.50000
MOLAR BOILUP RATIO                             102.067
CONDENSER DUTY (W/O SUBCOOL)   WATT                -0.100952+08
REBOILER DUTY                WATT           7,563,350.


****   MANIPULATED VARIABLES   ****

                                BOUNDS          CALCULATED
                            LOWER       UPPER       VALUE
MOLAR BOTTOMS RATE        KMOL/HR    6.0000       7.0000       6.8700
MOLAR DIST VAPOR FRAC              0.20000E-01   0.10000      0.22264E-01

****    DESIGN SPECIFICATIONS   ****

NO  SPEC-TYPE     QUALIFIERS            UNIT      SPECIFIED     CALCULATED
                                     VALUE        VALUE
1  MOLE-FLOW     STREAMS: S14          KMOL/HR     0.45000       0.45000
             COMPS:   WATER

****    DESIGN SPECIFICATIONS   ****

NO  SPEC-TYPE     QUALIFIERS            UNIT      SPECIFIED     CALCULATED
                                     VALUE        VALUE
2  MOLE-FLOW     STREAMS: C02MET        KMOL/HR      5.0000       5.0000
             COMPS:   METHANOL

****   MAXIMUM FINAL RELATIVE ERRORS   ****

DEW POINT                    0.14006E-06  STAGE=  7
BUBBLE POINT                 0.38681E-07  STAGE=  6
COMPONENT MASS BALANCE        0.17454E-05  STAGE=  1 COMP=WATER
ENERGY BALANCE               0.12271E-04  STAGE=  1

****    PROFILES   ****

**NOTE** REPORTED VALUES FOR STAGE LIQUID AND VAPOR RATES ARE THE FLOWS
       FROM THE STAGE INCLUDING ANY SIDE PRODUCT.

                              ENTHALPY
STAGE TEMPERATURE   PRESSURE           J/KMOL            HEAT DUTY
   C            BAR           LIQUID       VAPOR       WATT

1   63.836       1.0000     -0.23514E+09 -0.20368E+09  -.10095+08
2   64.464       1.0000     -0.23530E+09 -0.19979E+09
3   64.837       1.0000     -0.23615E+09 -0.19991E+09
4   65.938       1.0000     -0.23883E+09 -0.20046E+09
5   69.560       1.0000     -0.24640E+09 -0.20247E+09
6   78.046       1.0000     -0.26010E+09 -0.20885E+09
7   90.974       1.0000     -0.30390E+09 -0.22084E+09   .75633+07

STAGE     FLOW RATE                FEED RATE              PRODUCT RATE
        KMOL/HR                  KMOL/HR                KMOL/HR
   LIQUID     VAPOR      LIQUID    VAPOR    MIXED     LIQUID    VAPOR
1  1028.      5.109                          224.3652    5.1090
2  803.1      1033.
3  799.6      1033.
4  765.2      1029.              236.1000
5  742.3      758.6        0.2424
6  708.1      735.5
7  6.870      701.2                            6.8700

****  MASS FLOW PROFILES  ****

STAGE     FLOW RATE                FEED RATE              PRODUCT RATE
        KG/HR                    KG/HR                  KG/HR
   LIQUID     VAPOR      LIQUID    VAPOR    MIXED     LIQUID    VAPOR
1 0.3290E+05  164.9                          7183.9480  164.9452
2 0.2564E+05 0.3307E+05
3 0.2532E+05 0.3299E+05
4 0.2368E+05 0.3267E+05          7519.1515
5 0.2131E+05 0.2351E+05    39.0966
6 0.1734E+05 0.2110E+05
7  209.4     0.1713E+05                          209.4124

                 ****   MOLE-X-PROFILE     ****
STAGE     METHANOL      OIL          FAME         GLYCEROL      WATER
```

1	0.99758	0.25015E-19	0.19607E-21	0.28524E-17	0.20057E-02
2	0.99188	0.13015E-16	0.16639E-15	0.17052E-12	0.81093E-02
3	0.97307	0.52514E-14	0.10617E-09	0.77336E-08	0.26924E-01
4	0.91837	0.20645E-11	0.60424E-04	0.32106E-03	0.81200E-01
5	0.75528	0.23979E-11	0.17796E-03	0.47046E-03	0.24399
6	0.45478	0.33400E-11	0.18684E-03	0.49918E-03	0.54445
7	0.17626	0.25819E-09	0.19229E-01	0.50833E-01	0.74494

**** MOLE-X-PROFILE ****

STAGE	CO2	GC
1	0.41475E-03	0.17114E-19
2	0.10209E-04	0.28595E-14
3	0.39709E-05	0.36169E-09
4	0.38545E-05	0.41609E-04
5	0.74031E-07	0.80803E-04
6	0.13361E-08	0.85131E-04
7	0.22152E-10	0.87309E-02

**** MOLE-Y-PROFILE ****

STAGE	METHANOL	OIL	FAME	GLYCEROL	WATER
1	0.97866	0.46912E-22	0.21514E-27	0.45140E-22	0.48055E-03
2	0.99749	0.24891E-19	0.19510E-21	0.28383E-17	0.19981E-02
3	0.99305	0.10128E-16	0.12941E-15	0.13262E-12	0.67453E-02
4	0.97844	0.40805E-14	0.82499E-10	0.60092E-08	0.21360E-01
5	0.92483	0.51287E-14	0.35067E-09	0.11696E-07	0.75165E-01
6	0.76069	0.85126E-14	0.83771E-09	0.23584E-07	0.23931
7	0.45751	0.84312E-12	0.27494E-06	0.60300E-05	0.54248

**** MOLE-Y-PROFILE ****

STAGE	CO2	GC
1	0.20859E-01	0.96536E-25
2	0.51591E-03	0.17030E-19
3	0.20127E-03	0.22241E-14
4	0.19706E-03	0.28104E-09
5	0.38918E-05	0.73991E-09
6	0.74722E-07	0.15490E-08
7	0.13489E-08	0.42330E-06

**** K-VALUES ****

STAGE	METHANOL	OIL	FAME	GLYCEROL	WATER
1	0.98103	0.18754E-02	0.10973E-05	0.15825E-04	0.23960
2	1.0057	0.19125E-02	0.11726E-05	0.16645E-04	0.24640
3	1.0205	0.19287E-02	0.12189E-05	0.17149E-04	0.25053
4	1.0654	0.19764E-02	0.13653E-05	0.18717E-04	0.26305
5	1.2245	0.21388E-02	0.19705E-05	0.24860E-04	0.30806
6	1.6726	0.25487E-02	0.44836E-05	0.47246E-04	0.43955
7	2.5956	0.32654E-02	0.14298E-04	0.11862E-03	0.72822

**** K-VALUES ****

STAGE	CO2	GC
1	50.294	0.56407E-05
2	50.537	0.59553E-05
3	50.686	0.61491E-05
4	51.125	0.67543E-05
5	52.569	0.91570E-05
6	55.927	0.18196E-04
7	60.895	0.48483E-04

**** MASS-X-PROFILE ****

STAGE	METHANOL	OIL	FAME	GLYCEROL	WATER
1	0.99830	0.69175E-18	0.18156E-20	0.82042E-17	0.11285E-02
2	0.99541	0.36094E-15	0.15451E-14	0.49184E-12	0.45756E-02
3	0.98468	0.14685E-12	0.99416E-09	0.22493E-07	0.15318E-01
4	0.95102	0.59080E-10	0.57900E-03	0.95560E-03	0.47277E-01
5	0.84317	0.73975E-10	0.18383E-02	0.15096E-02	0.15315
6	0.59498	0.12075E-09	0.22618E-02	0.18770E-02	0.40047
7	0.18529	0.75001E-08	0.18704	0.15358	0.44027

**** MASS-X-PROFILE ****

STAGE	CO2	GC
1	0.57008E-03	0.63119E-19
2	0.14071E-04	0.10576E-13
3	0.55190E-05	0.13489E-08
4	0.54824E-05	0.15880E-03
5	0.11351E-06	0.33245E-03
6	0.24008E-08	0.41046E-03
7	0.31983E-10	0.33824E-01

**** MASS-Y-PROFILE ****

STAGE	METHANOL	OIL	FAME	GLYCEROL	WATER
1	0.97130	0.12866E-20	0.19758E-26	0.12876E-21	0.26815E-03
2	0.99817	0.68830E-18	0.18065E-20	0.81633E-17	0.11242E-02
3	0.99592	0.28069E-15	0.12009E-14	0.38228E-12	0.38034E-02
4	0.98760	0.11381E-12	0.77053E-09	0.17433E-07	0.12122E-01
5	0.95630	0.14655E-12	0.33553E-08	0.34760E-07	0.43698E-01
6	0.84970	0.26276E-12	0.86586E-08	0.75717E-07	0.15030
7	0.59999	0.30554E-10	0.33363E-05	0.22729E-04	0.39998

**** MASS-Y-PROFILE ****

STAGE	CO2	GC
1	0.28435E-01	0.35310E-24
2	0.70908E-03	0.62804E-19
3	0.27724E-03	0.82203E-14
4	0.27320E-03	0.10455E-08
5	0.55272E-05	0.28197E-08
6	0.11464E-06	0.63768E-08
7	0.24297E-08	0.20459E-05

****
***** COLUMN TARGETING RESULTS *****
****

*** THERMAL ANALYSIS ***

STAGE	TEMPERATURE C	PRESSURE BAR	ENTHALPY DEFICIT WATT	EXERGY LOSS WATT	CARNOT FACTOR
1	63.836	1.0000	0.10095E+08	14188.	0.11524
2	64.464	1.0000	0.78768E+07	4295.5	0.11689
3	64.837	1.0000	0.73474E+07	11882.	0.11787
4	65.938	1.0000	0.71421E+07	59744.	0.12073
5	69.560	1.0000	0.74214E+07	0.11115E+06	0.13002
6	78.046	1.0000	0.75645E+07	0.19422E+06	0.15104
7	90.974	1.0000	0.75633E+07	0.12226E+06	0.18119

*** HYDRAULIC ANALYSIS ***

*** MOLE BASIS ***

STAGE	VAPOR TO IDEAL MINIMUM KMOL/HR	ACTUAL KMOL/HR	HYDRAULIC MAXIMUM KMOL/HR
1	0.0000	1032.6	575.10
2	230.46	1032.6	575.07
3	283.76	1029.1	575.63
4	303.30	994.65	557.73
5	20.617	735.47	582.69
6	5.7859	701.20	617.12
7	0.0000	0.0000	0.0000

STAGE	LIQUID FROM IDEAL MINIMUM KMOL/HR	ACTUAL KMOL/HR	HYDRAULIC MAXIMUM KMOL/HR
1	0.0000	1027.5	572.25
2	0.99169	803.11	447.27
3	54.286	799.65	447.28
4	73.827	765.18	429.06
5	27.487	742.34	588.13
6	12.656	708.07	623.16
7	0.0000	6.8700	6.0462

*** MASS BASIS ***

STAGE	VAPOR TO IDEAL MINIMUM KG/HR	ACTUAL KG/HR	HYDRAULIC MAXIMUM KG/HR
1	0.0000	33065.	18415.
2	7379.5	32991.	18374.
3	9066.1	32669.	18273.
4	9628.2	31025.	17397.
5	638.88	21097.	16715.
6	165.97	17133.	15078.
7	0.0000	0.0000	0.0000

STAGE	LIQUID FROM IDEAL MINIMUM KG/HR	ACTUAL KG/HR	HYDRAULIC MAXIMUM KG/HR
1	0.0000	25716.	18323.
2	31.663	25642.	14281.

```
  3  1718.9        25320.        14163.
  4  2284.4        23676.        13276.
  5  788.93        21307.        16881.
  6  309.97        17342.        15263.
  7  0.0000        209.41        184.30

            *********************************
            ***** HYDRAULIC PARAMETERS *****
            *********************************

    *** DEFINITIONS ***

     MARANGONI INDEX = SIGMA - SIGMATO
     FLOW PARAM = (ML/MV)*SQRT(RHOV/RHOL)
     QR = QV*SQRT(RHOV/(RHOL-RHOV))
     F FACTOR = QV*SQRT(RHOV)
      WHERE:
      SIGMA IS THE SURFACE TENSION OF LIQUID FROM THE STAGE
      SIGMATO IS THE SURFACE TENSION OF LIQUID TO THE STAGE
      ML IS THE MASS FLOW OF LIQUID FROM THE STAGE
      MV IS THE MASS FLOW OF VAPOR TO THE STAGE
      RHOL IS THE MASS DENSITY OF LIQUID FROM THE STAGE
      RHOV IS THE MASS DENSITY OF VAPOR TO THE STAGE
      QV IS THE VOLUMETRIC FLOW RATE OF VAPOR TO THE STAGE

              TEMPERATURE
                C
STAGE      LIQUID FROM       VAPOR TO
  1        63.836            64.464
  2        64.464            64.837
  3        64.837            65.938
  4        65.938            87.450
  5        69.560            78.046
  6        78.046            90.974
  7        90.974            90.974

         MASS FLOW              VOLUME FLOW        MOLECULAR WEIGHT
          KG/HR                  GAL/HR
STAGE LIQUID FROM  VAPOR TO   LIQUID FROM  VAPOR TO   LIQUID FROM  VAPOR TO
  1  32900.     33065.     11778.     0.75539E+07  32.019      32.020
  2  25642.     32991.     9184.4     0.75624E+07  31.929      31.950
  3  25320.     32669.     9055.3     0.75630E+07  31.665      31.745
  4  23676.     31025.     8422.6     0.77908E+07  30.942      31.192
  5  21307.     21097.     7448.8     0.56100E+07  28.702      28.685
  6  17342.     17133.     5781.5     0.55575E+07  24.492      24.433
  7  209.41     0.0000     63.393      0.0000      30.482

          DENSITY                VISCOSITY        SURFACE TENSION
          KG/CUM                 N-SEC/SQM          N/M
STAGE LIQUID FROM  VAPOR TO    LIQUID FROM  VAPOR TO     LIQUID FROM
  1  737.91      1.1563     0.32897E-03  0.11038E-04   0.19034E-01
  2  737.55      1.1525     0.32745E-03  0.11054E-04   0.19267E-01
  3  738.68      1.1411     0.32765E-03  0.11106E-04   0.20102E-01
  4  742.59      1.0520     0.32869E-03  0.11896E-04   0.22518E-01
  5  755.64     0.99345     0.32883E-03  0.11720E-04   0.29609E-01

          DENSITY                VISCOSITY        SURFACE TENSION
          KG/CUM                 N-SEC/SQM          N/M
STAGE LIQUID FROM  VAPOR TO    LIQUID FROM  VAPOR TO     LIQUID FROM
  6  792.41     0.81439     0.32045E-03  0.12360E-04   0.42090E-01
  7  872.67                 0.36996E-03               0.51958E-01


    MARANGONI INDEX   FLOW PARAM         QR         REDUCED F-FACTOR
STAGE   N/M                            GAL/HR       (KG-CUM)**.5/SEC
  1                0.39389E-01      0.29926E+06       8.5413
  2  0.23362E-03      0.30724E-01      0.29917E+06       8.5365
  3  0.83509E-03      0.30463E-01      0.29749E+06       8.4951
  4  0.24159E-02      0.28723E-01      0.29344E+06       8.4024
  5  0.70893E-02      0.36619E-01      0.20355E+06       5.8796
  6  0.12481E-01      0.32450E-01      0.17826E+06       5.2736
  7  0.98676E-02                       0.0000            0.0000

            ***************************************
            ***** TRAY SIZING CALCULATIONS *****
            ***************************************

  ********************
  *** SECTION   1 ***
```

```
********************

STARTING STAGE NUMBER                          2
ENDING STAGE NUMBER                            6
FLOODING CALCULATION METHOD                    GLITSCH

DESIGN PARAMETERS
------------------
PEAK CAPACITY FACTOR                           1.00000
SYSTEM FOAMING FACTOR                          1.00000
FLOODING FACTOR                                0.80000
MINIMUM COLUMN DIAMETER        METER           0.30480
MINIMUM DC AREA/COLUMN AREA                    0.100000
HOLE AREA/ACTIVE AREA                          0.12000

TRAY SPECIFICATIONS
-------------------
TRAY TYPE                                      SIEVE
NUMBER OF PASSES                               1
TRAY SPACING                   METER           0.60960

      ***** SIZING RESULTS @ STAGE WITH MAXIMUM DIAMETER *****

STAGE WITH MAXIMUM DIAMETER                    2
COLUMN DIAMETER                METER           2.27085
DC AREA/COLUMN AREA                            0.100000
DOWNCOMER VELOCITY             M/SEC           0.023845
FLOW PATH LENGTH               METER           1.56018
SIDE DOWNCOMER WIDTH           METER           0.35533
SIDE WEIR LENGTH               METER           1.65002
CENTER DOWNCOMER WIDTH         METER           0.0
CENTER WEIR LENGTH             METER           0.0
OFF-CENTER DOWNCOMER WIDTH     METER           0.0
OFF-CENTER SHORT WEIR LENGTH   METER           0.0
OFF-CENTER LONG WEIR LENGTH    METER           0.0
TRAY CENTER TO OCDC CENTER     METER           0.0

                **** SIZING PROFILES ****

  STAGE    DIAMETER     TOTAL AREA   ACTIVE AREA   SIDE DC AREA
           METER        SQM          SQM           SQM
    2      2.2708       4.0501       3.2401        0.40501
    3      2.2656       4.0313       3.2251        0.40313
    4      2.2614       4.0164       3.2132        0.40164
    5      1.8962       2.8239       2.2591        0.28239
    6      1.7952       2.5312       2.0250        0.25312

         ************************************
         ***** TRAY RATING CALCULATIONS *****
         ************************************

********************
*** SECTION   1 ***
********************

STARTING STAGE NUMBER                          2
ENDING STAGE NUMBER                            6
FLOODING CALCULATION METHOD                    GLITSCH
PEAK CAPACITY FACTOR                           1.00000
SYSTEM FOAMING FACTOR                          1.00000
OVERALL TRAY EFFICIENCY                        1.00000

TRAY SPECIFICATIONS
-------------------

                !             ! !
                !       A     ! !
                ! !-----------------!  AA
                ! !             !
                ! !     A       !
                !-----------------!  !  AA
                !             ! !
                !             ! !
                 SINGLE CROSSFLOW TRAY


NUMBER OF PASSES                               1
DIAMETER                       METER           1.50000
TRAY SPACING                   METER           0.60960
```

```
DECK THICKNESS              METER              0.0034036
TRAY TYPE                                  SIEVE
HOLE AREA/ACTIVE AREA                        0.12000
HOLE DIAMETER               METER              0.012700

DOWNCOMER DIMENSIONS
--------------------
WEIR HEIGHT                 METER              0.050800
DC CLEARANCE                METER              0.038100
TOP DC WIDTH                METER              0.23475

            ***** RATING RESULTS *****

DIAMETER                    METER              1.50000
STAGE-MAX FLOODING FACTOR                          2
FLOODING FACTOR                                1.79557
STAGE-MAX DC BACKUP/TRAY SPACE                       2
DC BACKUP                   METER              0.46002
DC BACKUP/TRAY SPACING                           0.75463
STAGE-MAX DC VELOCITY                              2
DC VELOCITY                 M/SEC              0.054638
STAGE-MAX WEIRLOADING                            2 (PANEL A)
WEIR LOADING                SQM/SEC            0.0088604
SECTION PRESSURE DROP       N/SQM              10,599.2
MAX APPROACH TO SYSTEM LIMIT                       1.27843
STAGE-MAX SYSTEM LIMIT                             2

                  **** RATING PROFILES ****

   FLOODING                        DC BACKUP/
STAGE FACTOR     DC VELOCITY  DC BACKUP    TRAY SPACE  PRES. DROP
             M/SEC      METER                N/SQM
 2    1.796     0.5464E-01  0.4600      0.7546      2677.
 3    1.788     0.5387E-01  0.4557      0.7476      2654.
 4    1.783     0.5011E-01  0.4437      0.7279      2600.
 5    1.262     0.4431E-01  0.2771      0.4546      1441.
 6    1.136     0.3439E-01  0.2338      0.3836      1226.

            ***  ASSOCIATED  UTILITIES  ***

UTILITY USAGE:  CW       (WATER)
-------------------------------
CONDENSER              3.4612+05                2.1359-03
                 -------------            -------------
TOTAL:                 3.4612+05  KG/HR         2.1359-03  $/SEC
                 =============
UTILITY USAGE:  ST-1BAR   (STEAM)
-------------------------------
REBOILER               1.0175+04                6.6994-03
                 -------------            -------------
TOTAL:                 1.0175+04  KG/HR         6.6994-03  $/SEC
                 =============
```

Table E-8. Column T202 results summary of the novel plant (Fig. E-1c).

```
BLOCK:  T202     MODEL: RADFRAC
 -------------------------------
   INLETS   - S12      STAGE  10
   OUTLETS  - MET      STAGE   1
              R3       STAGE   1
              S13      STAGE  15
  PROPERTY OPTION SET:   UNIF-DMD  DORTMUND MOD. UNIFAC / REDLICH-KWONG-SOAVE

                 ***  MASS AND ENERGY BALANCE  ***
                            IN            OUT        RELATIVE DIFF.
   TOTAL BALANCE
     MOLE(KMOL/HR )          23.8141        23.8141       -0.239751E-07
     MASS(KG/HR   )          2131.69        2131.69       -0.211489E-08
     ENTHALPY(WATT    )      -0.408286E+07   -0.405328E+07   -0.724624E-02

                  **********************
                  ****  INPUT DATA  ****
                  **********************

  ****   INPUT PARAMETERS   ****

   NUMBER OF STAGES                                    15
   ALGORITHM OPTION                                    STANDARD
   ABSORBER OPTION                                     NO
   INITIALIZATION OPTION                               STANDARD
   HYDRAULIC PARAMETER CALCULATIONS                    NO
   INSIDE LOOP CONVERGENCE METHOD                      BROYDEN
   DESIGN SPECIFICATION METHOD                         NESTED
   MAXIMUM NO. OF OUTSIDE LOOP ITERATIONS              200
   MAXIMUM NO. OF INSIDE LOOP ITERATIONS               10
   MAXIMUM NUMBER OF FLASH ITERATIONS                  30
   FLASH TOLERANCE                                     0.000100000
   OUTSIDE LOOP CONVERGENCE TOLERANCE                  0.000100000

  ****   COL-SPECS   ****

   MOLAR VAPOR DIST / TOTAL DIST                       0.22000
   MOLAR REFLUX RATIO                                  2.00000
   MOLAR BOTTOMS RATE          KMOL/HR                 5.50000

  ****    PROFILES   ****

   P-SPEC        STAGE   1  PRES, BAR                  0.0100000

   TEMP-EST      STAGE   1  TEMP, C                    246.700
                  2                    286.900
                  3                    288.100
                  4                    288.400
                  5                    288.800
                  6                    289.300
                  7                    290.000
                  8                    291.000
                  9                    292.400
                 10                    294.200
                 11                    299.100
                 12                    304.600

                 *******************
                 ****  RESULTS  ****
                 *******************

  ***   COMPONENT SPLIT FRACTIONS   ***

                     OUTLET STREAMS
                     --------------
             MET         R3          S13
   COMPONENT:
   METHANOL    .99347      .65304E-02   0.0000
   FAME        .96829      .31708E-01   0.0000
   GLYCEROL    .44001E-01   .91662      .39379E-01
   WATER       .99562      .43805E-02   0.0000
   CO2         .99922      .77870E-03   0.0000
   GC         .29216E-03   .13416E-01   .98629


  ***    SUMMARY OF KEY RESULTS    ***
```

```
TOP STAGE TEMPERATURE          C                    134.676
BOTTOM STAGE TEMPERATURE       C                    182.159
TOP STAGE LIQUID FLOW          KMOL/HR              60.7927
BOTTOM STAGE LIQUID FLOW       KMOL/HR              5.74754
TOP STAGE VAPOR FLOW           KMOL/HR              3.97464
BOILUP VAPOR FLOW              KMOL/HR              83.2900
MOLAR REFLUX RATIO                                  3.36493
MOLAR BOILUP RATIO                                  14.4914
CONDENSER DUTY (W/O SUBCOOL)   WATT                 -1,778,290.
REBOILER DUTY                  WATT                 1,807,870.

****   MANIPULATED VARIABLES   ****

                                BOUNDS          CALCULATED
                              LOWER      UPPER       VALUE
MOLAR BOTTOMS RATE        KMOL/HR    5.0000      6.5000      5.7475
MOLAR REFLUX RATIO                   1.5000      3.5000      3.3649

****    DESIGN SPECIFICATIONS   ****

NO  SPEC-TYPE     QUALIFIERS          UNIT      SPECIFIED     CALCULATED
                                     VALUE        VALUE
 1  MOLE-FLOW     STREAMS: R3         KMOL/HR     14.000        14.000
              COMPS:   GLYCEROL

****    DESIGN SPECIFICATIONS   ****

NO  SPEC-TYPE     QUALIFIERS          UNIT      SPECIFIED     CALCULATED
                                     VALUE        VALUE
 2  MOLE-FLOW     STREAMS: R3         KMOL/HR     0.70000E-01   0.70000E-01
              COMPS:   GC

****   MAXIMUM FINAL RELATIVE ERRORS   ****

DEW POINT                    0.19990E-04  STAGE= 13
BUBBLE POINT                 0.20573E-04  STAGE= 13
COMPONENT MASS BALANCE       0.15617E-06  STAGE=  1 COMP=WATER
ENERGY BALANCE               0.14976E-05  STAGE= 15

****    PROFILES   ****

**NOTE** REPORTED VALUES FOR STAGE LIQUID AND VAPOR RATES ARE THE FLOWS
       FROM THE STAGE INCLUDING ANY SIDE PRODUCT.

                              ENTHALPY
STAGE TEMPERATURE   PRESSURE          J/KMOL          HEAT DUTY
   C          BAR          LIQUID      VAPOR       WATT

 1   134.68      0.10000E-01  -0.65151E+09 -0.26132E+09  -.17783+07
 2   168.80      0.10000E-01  -0.64410E+09 -0.55067E+09
 3   168.97      0.10000E-01  -0.64502E+09 -0.55277E+09
 4   169.09      0.10000E-01  -0.64648E+09 -0.55349E+09
 8   170.43      0.10000E-01  -0.66347E+09 -0.56242E+09
 9   171.16      0.10000E-01  -0.67219E+09 -0.56747E+09
10   172.94      0.10000E-01  -0.68263E+09 -0.58926E+09
11   174.23      0.10000E-01  -0.69655E+09 -0.59949E+09
14   180.34      0.10000E-01  -0.74923E+09 -0.65277E+09
15   182.16      0.10000E-01  -0.76069E+09 -0.67030E+09   .18079+07

STAGE     FLOW RATE              FEED RATE              PRODUCT RATE
        KMOL/HR                KMOL/HR                KMOL/HR
   LIQUID     VAPOR      LIQUID    VAPOR    MIXED     LIQUID    VAPOR
 1  74.88      3.975                          14.0918    3.9746
 2  67.54      78.86
 3  67.54      85.61
 4  67.49      85.60
 8  67.03      85.27
 9  66.83      85.10                3.7257
10  89.43      81.17        20.0883
11  89.14      83.68
14  89.04      83.13
15  5.748      83.29                           5.7475

 ****  MASS FLOW PROFILES  ****

STAGE     FLOW RATE              FEED RATE              PRODUCT RATE
        KG/HR                  KG/HR                  KG/HR
   LIQUID     VAPOR      LIQUID    VAPOR    MIXED     LIQUID    VAPOR
 1  6900.      170.2                          1298.3920  170.2125
```

2	6237.	7070.	
3	6248.	7705.	
4	6263.	7717.	
8	6441.	7839.	
9	6534.	7909.	149.4055
10	8930.	7854.	1982.2873
11	9145.	8267.	
14	0.1007E+05	9094.	
15	663.1	9402.	663.0883

**** MOLE-X-PROFILE ****

STAGE	METHANOL	FAME	GLYCEROL	WATER	CO2
1	0.15096E-02	0.27253E-04	0.99348	0.16440E-04	0.20399E-07
2	0.46094E-04	0.16528E-05	0.99048	0.39623E-06	0.84184E-09
3	0.41117E-04	0.13450E-05	0.98348	0.35646E-06	0.77133E-09
4	0.40849E-04	0.13307E-05	0.97265	0.35449E-06	0.76939E-09
8	0.37962E-04	0.11841E-05	0.84624	0.33191E-06	0.74977E-09
9	0.36514E-04	0.11026E-05	0.78105	0.31961E-06	0.74001E-09
10	0.37898E-06	0.53336E-07	0.70144	0.21999E-08	0.96957E-12
11	0.33881E-09	0.34091E-09	0.59659	0.10459E-11	0.16893E-15
14	0.13459E-18	0.16921E-16	0.19400	0.51541E-22	0.74762E-27
15	0.82774E-22	0.34081E-19	0.10465	0.14299E-25	0.11687E-30

**** MOLE-X-PROFILE ****

STAGE	GC
1	0.49674E-02
2	0.94735E-02
3	0.16482E-01
4	0.27304E-01
8	0.15372
9	0.21891
10	0.29856
11	0.40341
14	0.80600
15	0.89535

**** MOLE-Y-PROFILE ****

STAGE	METHANOL	FAME	GLYCEROL	WATER	CO2
1	0.81424	0.29507E-02	0.16908	0.13248E-01	0.92803E-04
2	0.42473E-01	0.17460E-03	0.95193	0.68333E-03	0.46968E-05
3	0.38088E-01	0.14278E-03	0.95284	0.61809E-03	0.43127E-05
4	0.38087E-01	0.14255E-03	0.94731	0.61811E-03	0.43129E-05
8	0.38236E-01	0.14303E-03	0.87811	0.62054E-03	0.43300E-05
9	0.38311E-01	0.14326E-03	0.83899	0.62176E-03	0.43386E-05
10	0.42261E-03	0.76406E-05	0.81919	0.45791E-05	0.58088E-08
11	0.40501E-06	0.57000E-07	0.74243	0.23510E-08	0.10362E-11
14	0.21667E-15	0.68082E-14	0.33433	0.17465E-18	0.50110E-23

**** MOLE-Y-PROFILE ****

STAGE	METHANOL	FAME	GLYCEROL	WATER	CO2
15	0.14387E-18	0.18086E-16	0.20017	0.55097E-22	0.79920E-27

**** MOLE-Y-PROFILE ****

STAGE	GC
1	0.38353E-03
2	0.47364E-02
3	0.83097E-02
4	0.13839E-01
8	0.82884E-01
9	0.12192
10	0.18038
11	0.25757
14	0.66567
15	0.79983

**** K-VALUES ****

STAGE	METHANOL	FAME	GLYCEROL	WATER	CO2
1	539.37	108.27	0.17020	805.82	4549.4
2	921.42	105.63	0.96108	1724.6	5579.2
3	926.34	106.16	0.96885	1734.0	5591.2
4	932.38	107.13	0.97394	1743.7	5605.7
8	1007.2	120.79	1.0377	1869.6	5775.0
9	1049.2	129.93	1.0742	1945.4	5862.8
10	1115.1	143.25	1.1679	2081.5	5991.0
11	1195.4	167.20	1.2445	2247.7	6133.6
14	1609.8	402.36	1.7234	3388.6	6702.5
15	1738.1	530.69	1.9129	3853.2	6838.2

**** K-VALUES ****

STAGE	GC
1	0.77210E-01
2	0.49996
3	0.50418
4	0.50684
8	0.53919
9	0.55697
10	0.60417
11	0.63849
14	0.82590
15	0.89332

**** MASS-X-PROFILE ****

STAGE	METHANOL	FAME	GLYCEROL	WATER	CO2
1	0.52499E-03	0.87697E-04	0.99302	0.32145E-05	0.97435E-08
2	0.15995E-04	0.53072E-05	0.98786	0.77304E-07	0.40123E-09
3	0.14240E-04	0.43100E-05	0.97894	0.69408E-07	0.36690E-09
4	0.14104E-04	0.42514E-05	0.96524	0.68815E-07	0.36487E-09
8	0.12659E-04	0.36538E-05	0.81107	0.62229E-07	0.34341E-09
9	0.11965E-04	0.33433E-05	0.73562	0.58883E-07	0.33306E-09
10	0.12161E-06	0.15837E-06	0.64692	0.39688E-09	0.42732E-12
11	0.10583E-09	0.98534E-09	0.53560	0.18369E-12	0.72475E-16
14	0.38149E-19	0.44380E-16	0.15805	0.82137E-23	0.29105E-27

**** MASS-X-PROFILE ****

STAGE	METHANOL	FAME	GLYCEROL	WATER	CO2
15	0.22989E-22	0.87586E-19	0.83534E-01	0.22329E-26	0.44582E-31

**** MASS-X-PROFILE ****

STAGE	GC
1	0.63665E-02
2	0.12115E-01
3	0.21037E-01
4	0.34744E-01
8	0.18892
9	0.26437
10	0.35308
11	0.46440
14	0.84195
15	0.91647

**** MASS-Y-PROFILE ****

STAGE	METHANOL	FAME	GLYCEROL	WATER	CO2
1	0.60923	0.20429E-01	0.36362	0.55731E-02	0.95371E-04
2	0.15180E-01	0.57742E-03	0.97786	0.13731E-03	0.23056E-05
3	0.13559E-01	0.47035E-03	0.97494	0.12371E-03	0.21087E-05
4	0.13537E-01	0.46883E-03	0.96774	0.12352E-03	0.21055E-05
8	0.13326E-01	0.46127E-03	0.87963	0.12160E-03	0.20728E-05
9	0.13207E-01	0.45701E-03	0.83131	0.12051E-03	0.20543E-05
10	0.13995E-03	0.23413E-04	0.77969	0.85256E-06	0.26420E-08
11	0.13136E-06	0.17107E-06	0.69211	0.42872E-09	0.46160E-12
14	0.63461E-16	0.18452E-13	0.28145	0.28761E-19	0.20159E-23
15	0.40838E-19	0.47503E-16	0.16330	0.87928E-23	0.31158E-27

**** MASS-Y-PROFILE ****

STAGE	GC
1	0.10576E-02
2	0.62387E-02
3	0.10902E-01
4	0.18128E-01
8	0.10646
9	0.15491
10	0.22014
11	0.30789
14	0.71855
15	0.83670

****
***** COLUMN TARGETING RESULTS *****
****

*** THERMAL ANALYSIS ***

STAGE	TEMPERATURE C	PRESSURE BAR	ENTHALPY DEFICIT WATT	EXERGY LOSS WATT	CARNOT FACTOR
1	134.68	0.10000E-01	0.17783E+07	86152.	0.26893
2	168.80	0.10000E-01	0.18033E+06	6776.7	0.32538
3	168.97	0.10000E-01	-17036.	178.00	0.32564
4	169.09	0.10000E-01	-27346.	254.25	0.32581

```
  8  170.43      0.10000E-01   0.11979E+07      1013.9      0.32786
  9  171.16      0.10000E-01   0.11492E+07      9902.6      0.32896
 10  172.94      0.10000E-01   0.11793E+07      4725.6      0.33163
 11  174.23      0.10000E-01   0.13875E+07      3187.6      0.33357
 14  180.34      0.10000E-01   0.17281E+07      5139.6      0.34255
 15  182.16      0.10000E-01   0.18079E+07      2080.6      0.34517

                *** ASSOCIATED UTILITIES ***

UTILITY USAGE:  CW       (WATER)
------------------------------
CONDENSER                6.0970+04                 3.7623-04
                -------------              -------------
TOTAL:                   6.0970+04  KG/HR           3.7623-04  $/SEC
                =============
UTILITY USAGE:  ST-1BAR   (STEAM)
------------------------------
REBOILER                 2432.1152                 1.6014-03
                -------------              -------------
TOTAL:                   2432.1152  KG/HR           1.6014-03  $/SEC
                =============
```

APPENDIX F: Biodiesel-Glycerol Carbonate Production Plant by Glycerolysis

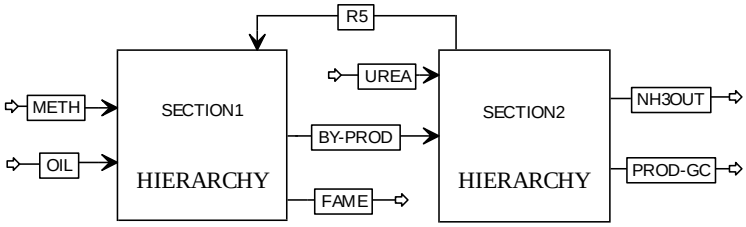

(a)

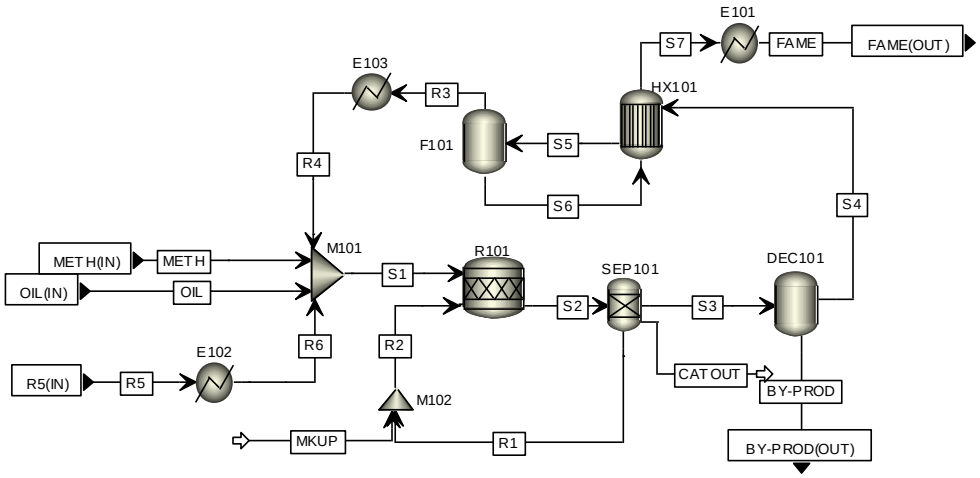

(b)

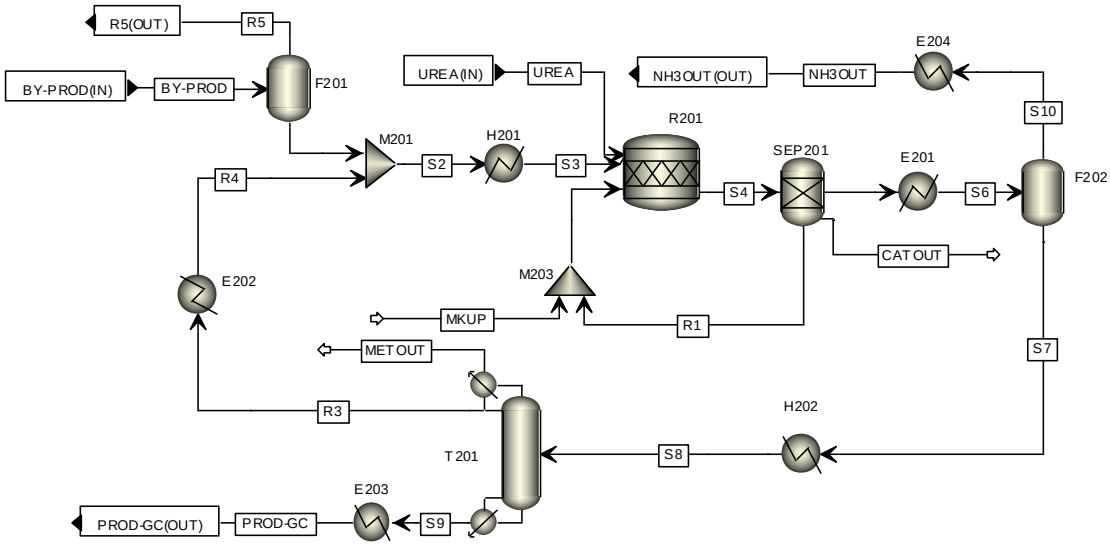

(c)

Fig. F-1. (a) Hierarchy of the novel biodiesel production plant by glycerolysis route; (b) process flow diagram of Section 1 for biodiesel and bioglycerol production plant; (c) process flow diagram of Section 2 for bioglycerol carbonate production plant.

Table F-1. Input summary of the glycerolysis plant (Fig. F-1).

```
;Input Summary created by Aspen Plus Rel. 25.0 at 19:10:45 Mon Apr 30, 2012

COMPONENTS
   METHANOL CH4O /
   OIL C57H104O6 /
   FAME C19H36O2 /
   GLYCEROL C3H8O3 /
   WATER H2O /
   EGGSHELL H2O /
   CO2 CO2 /
   GC C4H6O4-N1 /
   LA2O3 H2O /
   UREA CH4N2O /
   AMMONIA H3N /
   NH2CO-01 NH2COONH4

FLOWSHEET
   HIERARCHY SECTION1
   CONNECT $C-8 IN=OIL OUT="SECTION1.OIL"
   CONNECT $C-9 IN=METH OUT="SECTION1.METH"
   CONNECT $C-4 IN=R5 OUT="SECTION1.R5"
   CONNECT $C-1 IN="SECTION1.BY-PROD" OUT=BY-PROD
   CONNECT $C-14 IN="SECTION1.FAME" OUT=FAME
   HIERARCHY SECTION2
   CONNECT $C-2 IN=BY-PROD OUT="SECTION2.BY-PROD"
   CONNECT $C-5 IN=UREA OUT="SECTION2.UREA"
   CONNECT $C-3 IN="SECTION2.R5" OUT=R5
   CONNECT $C-13 IN="SECTION2.PROD-GC" OUT=PROD-GC
   CONNECT $C-6 IN="SECTION2.NH3OUT" OUT=NH3OUT

PROPERTIES UNIF-DMD TRUE-COMPS=YES

PROP-DATA
   PROP-LIST ATOMNO / NOATOM
   PVAL CO2 6 8 / 1. 2.

STRUCTURES
   STRUCTURES GC O1 C2 S / C2 O3 S / C2 O6 D / O3 C4  &
      S / C4 C5 S / C4 C7 S / C5 O1 S / C7 O8 S

PROP-DATA
   PROP-LIST ATOMNO / NOATOM
   PVAL GC 6 1 8 / 4. 6. 4.

PROP-DATA
   PROP-LIST ATOMNO / NOATOM
   PVAL GLYCEROL 6 1 8 / 3. 8. 3.

STRUCTURES
   UNIFAC OIL 1005 1 / 1010 41 / 1015 3 / 1200 1 /  &
      1500 3 / 1065 3
   STRUCTURES UREA N1 C2 S / C2 N3 S / C2 O4 D
   UNIF-DMD UREA 1405 1 / 1670 2

PROP-DATA
   PROP-LIST ATOMNO / NOATOM
   PVAL WATER 1 8 / 2. 1.

STREAM METH
   SUBSTREAM MIXED TEMP=25. PRES=1.
   MOLE-FLOW METHANOL 23.13137

STREAM OIL
   SUBSTREAM MIXED TEMP=25. PRES=1.
   MOLE-FLOW OIL 7.25

STREAM UREA
   SUBSTREAM MIXED TEMP=178. PRES=1.
   MOLE-FLOW UREA 6.9113

HIERARCHY SECTION1

DEF-STREAMS CONVEN ALL

SOLVE
   PARAM METHOD=SM
   RUN-MODE MODE=SIM
```

```
FLOWSHEET
   BLOCK SEP101 IN=S2 OUT=S3 R1 CATOUT
   BLOCK R101 IN=S1 R2 OUT=S2
   BLOCK M101 IN=METH OIL R6 R4 OUT=S1
   BLOCK DEC101 IN=S3 OUT=BY-PROD S4
   BLOCK M102 IN=R1 MKUP OUT=R2
   BLOCK HX101 IN=S6 S4 OUT=S7 S5
   BLOCK E101 IN=S7 OUT=FAME
   BLOCK E102 IN=R5 OUT=R6
   BLOCK F101 IN=S5 OUT=R3 S6
   BLOCK E103 IN=R3 OUT=R4

PROPERTIES UNIF-DMD FREE-WATER=STEAM-TA SOLU-WATER=3  &
      TRUE-COMPS=YES

STREAM MKUP
   SUBSTREAM MIXED TEMP=25. PRES=1.
   MASS-FLOW EGGSHELL 32.118

STREAM R1
   SUBSTREAM MIXED TEMP=58. PRES=1.
   MASS-FLOW EGGSHELL 227.56

STREAM R3
   SUBSTREAM MIXED TEMP=100.0493 PRES=1.
   MOLE-FLOW METHANOL 11.79

BLOCK M101 MIXER
   PARAM NPHASE=2
   BLOCK-OPTION FREE-WATER=NO

BLOCK M102 MIXER
   PARAM NPHASE=2
   BLOCK-OPTION FREE-WATER=NO

BLOCK SEP101 SEP
   PARAM
   FRAC STREAM=S3 SUBSTREAM=MIXED COMPS=METHANOL OIL FAME  &
      GLYCEROL WATER CO2 GC LA2O3 FRACS=1. 1. 1. 1. 1.  &
      1. 1. 1.
   FRAC STREAM=R1 SUBSTREAM=MIXED COMPS=EGGSHELL FRACS=0.9
   UTILITY UTILITY-ID=ELECTRIC

BLOCK E101 HEATER
   PARAM TEMP=25. PRES=1.
   UTILITY UTILITY-ID=CW

BLOCK E102 HEATER
   PARAM TEMP=25. PRES=1.
   UTILITY UTILITY-ID=CW

BLOCK E103 HEATER
   PARAM TEMP=25. PRES=1. NPHASE=2
   BLOCK-OPTION FREE-WATER=NO

BLOCK F101 FLASH2
   PARAM TEMP=100. PRES=0.5 NPHASE=2
   BLOCK-OPTION FREE-WATER=NO
   UTILITY UTILITY-ID=ST-1BAR

BLOCK DEC101 DECANTER
   PARAM TEMP=65. PRES=1. L2-COMPS=FAME
   UTILITY UTILITY-ID=ELECTRIC

BLOCK HX101 HEATX
   PARAM T-HOT=75. CALC-TYPE=DESIGN U-OPTION=PHASE  &
      F-OPTION=CONSTANT CALC-METHOD=SHORTCUT
   FEEDS HOT=S6 COLD=S4
   PRODUCTS HOT=S7 COLD=S5
   HOT-SIDE DP-OPTION=CONSTANT
   COLD-SIDE DP-OPTION=CONSTANT

BLOCK R101 RSTOIC
   PARAM TEMP=65. PRES=1.
   STOIC 1 MIXED OIL -1. / METHANOL -3. / GLYCEROL 1. /  &
      FAME 3.
   CONV 1 MIXED OIL 0.98
   UTILITY UTILITY-ID=ELECTRIC
```

```
EO-CONV-OPTI
   PARAM SOLVER=NSOLVE
   SM-INIT MAXFITER=40

ENDHIERARCHY SECTION1

HIERARCHY SECTION2


DEF-STREAMS CONVEN ALL

SOLVE
   PARAM METHOD=SM
   RUN-MODE MODE=SIM

FLOWSHEET
   BLOCK F201 IN=BY-PROD OUT=R5 S1
   BLOCK R201 IN=S3 R2 UREA OUT=S4
   BLOCK H201 IN=S2 OUT=S3
   BLOCK M201 IN=S1 R4 OUT=S2
   BLOCK SEP201 IN=S4 OUT=S5 CATOUT R1
   BLOCK F202 IN=S6 OUT=S10 S7
   BLOCK T201 IN=S8 OUT=METOUT R3 S9
   BLOCK E201 IN=S5 OUT=S6
   BLOCK H202 IN=S7 OUT=S8
   BLOCK M203 IN=MKUP R1 OUT=R2
   BLOCK E202 IN=R3 OUT=R4
   BLOCK E203 IN=S9 OUT=PROD-GC
   BLOCK E204 IN=S10 OUT=NH3OUT

PROPERTIES UNIF-DMD FREE-WATER=STEAM-TA SOLU-WATER=3  &
      TRUE-COMPS=YES

STREAM MKUP
   SUBSTREAM MIXED TEMP=25. PRES=1.
   MOLE-FLOW LA2O3 0.003

STREAM R3
   SUBSTREAM MIXED TEMP=95.658 PRES=0.01
   MOLE-FLOW GLYCEROL 0.5 / GC 0.16 / UREA 0.24 / AMMONIA  &
      0.000160969

STREAM R5
   SUBSTREAM MIXED TEMP=104.089 PRES=1.
   MOLE-FLOW METHANOL 30.4 / FAME 0.0118 / GLYCEROL 0.0392

BLOCK M201 MIXER
   PARAM T-EST=25.

BLOCK M203 MIXER
   PARAM T-EST=25.

BLOCK SEP201 SEP
   PARAM
   FRAC STREAM=S5 SUBSTREAM=MIXED COMPS=METHANOL OIL FAME  &
      GLYCEROL WATER EGGSHELL CO2 GC UREA AMMONIA FRACS=1.  &
      1. 1. 1. 1. 1. 1. 1. 1. 1.
   FRAC STREAM=R1 SUBSTREAM=MIXED COMPS=LA2O3 FRACS=0.7
   UTILITY UTILITY-ID=ELECTRIC

BLOCK E201 HEATER
   PARAM TEMP=60. PRES=1.
   UTILITY UTILITY-ID=CW

BLOCK E202 HEATER
   PARAM TEMP=25. PRES=1. NPHASE=2
   BLOCK-OPTION FREE-WATER=NO
   UTILITY UTILITY-ID=CW

BLOCK E203 HEATER
   PARAM TEMP=25. PRES=1. NPHASE=2
   BLOCK-OPTION FREE-WATER=NO
   UTILITY UTILITY-ID=CW

BLOCK E204 HEATER
   PARAM TEMP=25. PRES=1. NPHASE=2
   BLOCK-OPTION FREE-WATER=NO
   UTILITY UTILITY-ID=CW
```

```
BLOCK H201 HEATER
   PARAM TEMP=140. PRES=3. <kPa> NPHASE=1 PHASE=L
   BLOCK-OPTION FREE-WATER=NO
   UTILITY UTILITY-ID=ST-1BAR

BLOCK H202 HEATER
   PARAM TEMP=140. PRES=1.
   UTILITY UTILITY-ID=ST-1BAR

BLOCK F201 FLASH2
   PARAM TEMP=105. PRES=0.2 NPHASE=2
   BLOCK-OPTION FREE-WATER=NO
   UTILITY UTILITY-ID=ST-1BAR

BLOCK F202 FLASH2
   PARAM TEMP=60. PRES=0.5
   UTILITY UTILITY-ID=ST-1BAR

BLOCK T201 RADFRAC
   PARAM NSTAGE=10
   COL-CONFIG CONDENSER=PARTIAL-V-L
   FEEDS S8 5
   PRODUCTS R3 1 L / METOUT 1 V / S9 10 L
   P-SPEC 1 0.01
   COL-SPECS MOLE-RDV=0.5 MOLE-B=7. MOLE-RR=2.
   T-EST 1 95.66 / 2 163.8 / 3 171.48 / 4 173.65 / 5  &
      178.1 / 6 179.9 / 7 180.3 / 8 180.8 / 9 181.6 /  &
      10 182.5
   SPEC 1 MOLE-FLOW 0.5 COMPS=GLYCEROL STREAMS=R3
   SPEC 2 MOLE-FLOW 0.24 COMPS=UREA STREAMS=R3
   SPEC 3 MOLE-FLOW 0.16 COMPS=GC STREAMS=R3
   VARY 1 MOLE-B 6.8 7.2
   VARY 2 MOLE-RDV 0.4 0.6
   VARY 3 MOLE-RR 1.5 2.5
   REPORT TARGET HYDANAL
   UTILITIES COND-UTIL=CW REB-UTIL=ST-1BAR

BLOCK R201 RSTOIC
   PARAM TEMP=140. PRES=3. <kPa>
   STOIC 1 MIXED GLYCEROL -1. / UREA -1. / GC 1. /  &
      AMMONIA 2.
   CONV 1 MIXED GLYCEROL 0.85
   UTILITY UTILITY-ID=ELECTRIC

ENDHIERARCHY SECTION2

UTILITY CW GENERAL
   COST PRICE=2.2215E-005 <$/kg>
   PARAM UTILITY-TYPE=WATER COOLING-VALU=-105. CALOPT=DUTY

UTILITY ELECTRIC GENERAL
   COST ELEC-PRICE=0.06664495 <$/kWhr>
   PARAM UTILITY-TYPE=ELECTRICITY

UTILITY ST-1BAR GENERAL
   COST PRICE=0.00237034 <$/kg>
   PARAM UTILITY-TYPE=STEAM COOLING-VALU=2875.

UTILITY ST-22BAR GENERAL
   COST PRICE=0.01471331
   PARAM UTILITY-TYPE=STEAM COOLING-VALU=3019.3 <kJ/kg>

UTILITY ST-35BAR GENERAL
   COST PRICE=0.01656735
   PARAM UTILITY-TYPE=STEAM COOLING-VALU=2979. <kJ/kg>

UTILITY ST-190BA GENERAL
   COST PRICE=0.02332245
   PARAM UTILITY-TYPE=STEAM COOLING-VALU=2849.16 <kJ/kg>

DESIGN-SPEC DS-1
   DEFINE METFLOW MOLE-FLOW STREAM="SECTION1.R3"  &
      SUBSTREAM=MIXED COMPONENT=METHANOL
   SPEC "METFLOW" TO "11.79"
   TOL-SPEC "0.00001"
   VARY BLOCK-VAR BLOCK="SECTION1.F101" VARIABLE=TEMP  &
      SENTENCE=PARAM
   LIMITS "90" "110"
```

```
DESIGN-SPEC DS-2
   DEFINE METFLOW MOLE-FLOW STREAM="SECTION2.R5"  &
      SUBSTREAM=MIXED COMPONENT=METHANOL
   SPEC "METFLOW" TO "30.40"
   TOL-SPEC "0.000001"
   VARY BLOCK-VAR BLOCK="SECTION2.F201" VARIABLE=TEMP  &
      SENTENCE=PARAM
   LIMITS "100" "110"

EO-CONV-OPTI

CONV-OPTIONS
   PARAM TOL=0.001
   WEGSTEIN MAXIT=200

TEAR
   TEAR "SECTION1.R1" / "SECTION2.R5" / "SECTION1.R3" /  &
      "SECTION2.R3"
```

Table F-2. Reactor R101 results summary of the glycerolysis plant (Fig. F-1b).

```
BLOCK:  R101     MODEL: RSTOIC
 ------------------------------
  INLET STREAMS:        S1         R2
  OUTLET STREAM:        S2
  PROPERTY OPTION SET:   UNIF-DMD  DORTMUND MOD. UNIFAC / REDLICH-KWONG-SOAVE

                 ***  MASS AND ENERGY BALANCE  ***
                       IN         OUT       GENERATION   RELATIVE DIFF.
  TOTAL BALANCE
  MOLE(KMOL/HR )        73.8494       73.8494      0.156125E-14   0.00000
  MASS(KG/HR   )        8839.19       8839.19                  -0.205787E-15
  ENTHALPY(WATT    )   -0.886162E+07 -0.853358E+07              -0.370180E-01

                    ***  INPUT DATA  ***

  STOICHIOMETRY MATRIX:

   REACTION #   1:
    SUBSTREAM MIXED   :
    METHANOL  -3.00    OIL       -1.00    FAME       3.00    GLYCEROL   1.00


  REACTION CONVERSION SPECS: NUMBER=    1
    REACTION #   1:
    SUBSTREAM:MIXED    KEY COMP:OIL      CONV FRAC: 0.9800

  THREE  PHASE  TP  FLASH
  SPECIFIED TEMPERATURE C                          65.0000
  SPECIFIED PRESSURE    BAR                       1.00000
  MAXIMUM NO. ITERATIONS                           30
  CONVERGENCE TOLERANCE                              0.000100000
  SIMULTANEOUS REACTIONS
  GENERATE COMBUSTION REACTIONS FOR FEED SPECIES          NO

                    ***  RESULTS  ***
  OUTLET TEMPERATURE    C                          65.000
  OUTLET PRESSURE       BAR                       1.0000
  HEAT DUTY             WATT                     0.32804E+06
  VAPOR FRACTION                                 0.0000
  1ST LIQUID/TOTAL LIQUID                          0.45555

  REACTION EXTENTS:

    REACTION          REACTION
    NUMBER            EXTENT
                    KMOL/HR
    1                 7.1054

  V-L1-L2 PHASE EQUILIBRIUM :

    COMP          F(I)      X1(I)     X2(I)     Y(I)      K1(I)     K2(I)
    METHANOL      0.596     0.357     0.796     0.981     2.29      1.03
    OIL           0.196E-02 0.431E-02 0.374E-10 0.403E-05 0.781E-03 0.901E+05
    FAME          0.289     0.634     0.312E-03 0.116E-05 0.152E-05 0.309E-02
    GLYCEROL      0.966E-01 0.734E-03 0.177     0.275E-05 0.312E-02 0.130E-04
    EGGSHELL      0.167E-01 0.413E-02 0.272E-01 0.193E-01  3.91     0.592

                 ***  ASSOCIATED  UTILITIES  ***

 UTILITY ID FOR ELECTRICITY             ELECTRIC
 RATE OF CONSUMPTION                  3.2804+05  WATT
 COST                            6.0728-03  $/SEC
```

Table F-3. Flash Drum F101 results summary of the glycerolysis plant (Fig. F-1b).

```
BLOCK:  F101     MODEL: FLASH2
 ------------------------------
  INLET STREAM:         S5
  OUTLET VAPOR STREAM:   R3
  OUTLET LIQUID STREAM:  S6
  PROPERTY OPTION SET:   UNIF-DMD  DORTMUND MOD. UNIFAC / REDLICH-KWONG-SOAVE

                 ***  MASS AND ENERGY BALANCE  ***
                           IN            OUT       RELATIVE DIFF.

   TOTAL BALANCE
     MOLE(KMOL/HR )          34.4477        34.4477       -0.927930E-06
     MASS(KG/HR   )          6866.18        6866.19       -0.154061E-06
     ENTHALPY(WATT    )     -0.499418E+07   -0.485018E+07   -0.288325E-01

                    ***  INPUT DATA  ***
  TWO    PHASE  TP  FLASH
  SPECIFIED TEMPERATURE C                          100.425
  SPECIFIED PRESSURE    BAR                       0.50000
  MAXIMUM NO. ITERATIONS                           30
  CONVERGENCE TOLERANCE                              0.000100000

                     ***  RESULTS  ***
  OUTLET TEMPERATURE    C                           100.43
  OUTLET PRESSURE       BAR                       0.50000
  HEAT DUTY             WATT                     0.14401E+06
  VAPOR FRACTION                                 0.34234

  V-L PHASE EQUILIBRIUM :

    COMP            F(I)          X(I)          Y(I)          K(I)
    METHANOL        0.37619       0.51595E-01    0.99976        19.377
    OIL             0.42095E-02    0.63837E-02    0.32693E-04    0.51215E-02
    FAME            0.61878       0.94086        0.58537E-04    0.62216E-04
    GLYCEROL        0.81567E-03    0.11603E-02    0.15354E-03    0.13233

                 ***  ASSOCIATED  UTILITIES  ***

 UTILITY ID FOR STEAM                    ST-1BAR
 RATE OF CONSUMPTION                      180.3208  KG/HR
 COST                            1.1873-04  $/SEC
```

Table F-4. Design specification summary of flash drum F201 (Fig. F-1c).

```
DESIGN-SPEC:  DS-2
------------------

 SAMPLED VARIABLES:
   METFLOW  : METHANOLMOLEFLOW IN STREAM SECTION2.R5 SUBSTREAM MIXED

 SPECIFICATION:
   MAKE METFLOW APPROACH 30.4000
   WITHIN         0.100000-05

 MANIPULATED VARIABLES:
   VARY     : SENTENCE=PARAM VARIABLE=TEMP IN UOS BLOCK SECTION2.F201
   LOWER LIMIT =         90.0000                C
   UPPER LIMIT =        110.000                 C
   FINAL VALUE =         99.8718                C

 VALUES OF ACCESSED FORTRAN VARIABLES:
   VARIABLE      VALUE AT START      FINAL VALUE     UNITS
                 OF LOOP
   --------      --------------      -----------     -----
   METFLOW         30.4000             30.4000       KMOL/HR
```

Table F-5. Flash drum F201 results summary of the glycerolysis plant (Fig. F-1c).

```
BLOCK:  F201     MODEL: FLASH2
 ------------------------------
  INLET STREAM:         BY-PROD
  OUTLET VAPOR STREAM:   R5
  OUTLET LIQUID STREAM:  S1
  PROPERTY OPTION SET:   UNIF-DMD  DORTMUND MOD. UNIFAC / REDLICH-KWONG-SOAVE

                 ***  MASS AND ENERGY BALANCE  ***
                            IN            OUT       RELATIVE DIFF.
   TOTAL BALANCE
     MOLE(KMOL/HR )          38.1678        38.1678       0.369556E-07
     MASS(KG/HR   )          1653.25        1653.25       0.113801E-06
     ENTHALPY(WATT    )      -0.334626E+07   -0.301607E+07   -0.986746E-01

                   ***  INPUT DATA  ***
  TWO    PHASE  TP  FLASH
  SPECIFIED TEMPERATURE C                          99.8718
  SPECIFIED PRESSURE    BAR                       0.20000
  MAXIMUM NO. ITERATIONS                           30
  CONVERGENCE TOLERANCE                              0.000100000

                    ***  RESULTS  ***
  OUTLET TEMPERATURE    C                          99.872
  OUTLET PRESSURE       BAR                       0.20000
  HEAT DUTY             WATT                     0.33019E+06
  VAPOR FRACTION                                 0.79756

  V-L PHASE EQUILIBRIUM :

    COMP            F(I)          X(I)          Y(I)          K(I)
    METHANOL        0.81342       0.83654E-01    0.99865        11.938
    OIL             0.49505E-10    0.30079E-18    0.62070E-10    0.20636E+09
    FAME            0.33496E-03    0.14655E-03    0.38278E-03     2.6120
    GLYCEROL        0.18625        0.91620        0.96997E-03    0.10587E-02

                 ***  ASSOCIATED  UTILITIES  ***

 UTILITY ID FOR STEAM                   ST-1BAR
 RATE OF CONSUMPTION                     413.4564  KG/HR
 COST                            2.7223-04  $/SEC
```

Table F-6. Reactor R201 results summary of the glycerolysis plant (Fig. F-1c).

```
BLOCK:  R201     MODEL: RSTOIC
 ------------------------------
  INLET STREAMS:        S3         R2         UREA
  OUTLET STREAM:        S4
  PROPERTY OPTION SET:   UNIF-DMD  DORTMUND MOD. UNIFAC / REDLICH-KWONG-SOAVE

                 ***  MASS AND ENERGY BALANCE  ***
                       IN         OUT       GENERATION   RELATIVE DIFF.
  TOTAL BALANCE
  MOLE(KMOL/HR )        15.5489      21.9911      6.44222      0.161552E-15
  MASS(KG/HR   )        1167.63      1167.63                   0.00000
  ENTHALPY(WATT    )   -0.208388E+07 -0.186117E+07              -0.106869

                    ***  INPUT DATA  ***
  STOICHIOMETRY MATRIX:

   REACTION #   1:
    SUBSTREAM MIXED   :
    GLYCEROL  -1.00    GC        1.00    UREA     -1.00    AMMONIA    2.00

  REACTION CONVERSION SPECS: NUMBER=    1
    REACTION #   1:
    SUBSTREAM:MIXED    KEY COMP:GLYCEROL CONV FRAC: 0.8500

  THREE  PHASE  TP  FLASH
  SPECIFIED TEMPERATURE C                          140.000
  SPECIFIED PRESSURE    BAR                       0.030000
  MAXIMUM NO. ITERATIONS                           30
  CONVERGENCE TOLERANCE                              0.000100000
  SIMULTANEOUS REACTIONS
  GENERATE COMBUSTION REACTIONS FOR FEED SPECIES         NO

                    ***  RESULTS  ***
  OUTLET TEMPERATURE    C                          140.00
  OUTLET PRESSURE       BAR                       0.30000E-01
  HEAT DUTY             WATT                     0.22270E+06
  VAPOR FRACTION                                 0.67216
  1ST LIQUID/TOTAL LIQUID                          1.0000

  REACTION EXTENTS:

    REACTION         REACTION
    NUMBER           EXTENT
                   KMOL/HR
    1                6.4422

  V-L1-L2 PHASE EQUILIBRIUM :

    COMP          F(I)      X1(I)     X2(I)     Y(I)      K1(I)     K2(I)
    METHANOL      0.294E-01 0.156E-03 0.156E-03 0.437E-01  281.      281.
    FAME          0.529E-04 0.973E-06 0.973E-06 0.783E-04  80.5      80.5
    GLYCEROL      0.517E-01 0.137     0.137     0.103E-01 0.751E-01 0.751E-01
    GC            0.300     0.853     0.853     0.307E-01 0.360E-01 0.360E-01
    LA2O3         0.455E-03 0.128E-05 0.128E-05 0.676E-03  528.      528.
    UREA          0.322E-01 0.968E-02 0.968E-02 0.432E-01  4.47      4.47
    AMMONIA       0.586     0.722E-03 0.722E-03 0.871     0.121E+04 0.121E+04

                  ***  ASSOCIATED  UTILITIES  ***

 UTILITY ID FOR ELECTRICITY             ELECTRIC
 RATE OF CONSUMPTION                  2.2270+05  WATT
 COST                           4.1228-03  $/SEC
```

Table F-7. Flash drum F202 results summary of the glycerolysis plant (Fig. F-1c).

```
BLOCK:  F202     MODEL: FLASH2
 ------------------------------
  INLET STREAM:         S6
  OUTLET VAPOR STREAM:   S10
  OUTLET LIQUID STREAM:  S7
  PROPERTY OPTION SET:   UNIF-DMD  DORTMUND MOD. UNIFAC / REDLICH-KWONG-SOAVE

                 ***  MASS AND ENERGY BALANCE  ***
                            IN            OUT       RELATIVE DIFF.
   TOTAL BALANCE
     MOLE(KMOL/HR )          21.9811        21.9811        0.00000
     MASS(KG/HR   )          1167.45        1167.46       -0.461156E-05
     ENTHALPY(WATT    )      -0.194300E+07   -0.193960E+07   -0.174676E-02

                   ***  INPUT DATA  ***
  THREE  PHASE  TP  FLASH
  SPECIFIED TEMPERATURE C                          60.0000
  SPECIFIED PRESSURE    BAR                       0.50000
  MAXIMUM NO. ITERATIONS                           30
  CONVERGENCE TOLERANCE                              0.000100000

                    ***  RESULTS  ***
  OUTLET TEMPERATURE    C                          60.000
  OUTLET PRESSURE       BAR                       0.50000
  HEAT DUTY             WATT                      3393.9
  VAPOR FRACTION                                 0.59001
  1ST LIQUID/TOTAL LIQUID                          0.99988

  V-L1-L2 PHASE EQUILIBRIUM :

    COMP          F(I)      X1(I)     X2(I)     Y(I)      K1(I)     K2(I)
    METHANOL      0.294E-01 0.226E-01 0.502E-02 0.342E-01  1.52      6.81
    FAME          0.530E-04 0.160E-04 0.908     0.125E-05 0.782E-01 0.138E-05
    GLYCEROL      0.517E-01 0.126     0.649E-04 0.207E-05 0.164E-04 0.318E-01
    GC            0.300     0.733     0.590E-02 0.583E-05 0.796E-05 0.989E-03
    UREA          0.323E-01 0.781E-01 0.150E-02 0.388E-03 0.496E-02 0.259
    AMMONIA       0.586     0.404E-01 0.793E-01 0.965      23.9      12.2

                 ***  ASSOCIATED  UTILITIES  ***

 UTILITY ID FOR STEAM                    ST-1BAR
 RATE OF CONSUMPTION                       4.2498  KG/HR
 COST                           2.7982-06  $/SEC
```

Table F-8. Column T201 results summary of the glycerolysis plant (Fig. F-1c).

```
BLOCK:  T201     MODEL: RADFRAC
 -------------------------------
   INLETS   - S8      STAGE   5
   OUTLETS  - METOUT   STAGE   1
              R3       STAGE   1
              S9       STAGE  10
  PROPERTY OPTION SET:   UNIF-DMD  DORTMUND MOD. UNIFAC / REDLICH-KWONG-SOAVE

                 ***  MASS AND ENERGY BALANCE  ***
                            IN            OUT        RELATIVE DIFF.
   TOTAL BALANCE
     MOLE(KMOL/HR )          9.01195        9.01196       -0.329483E-07
     MASS(KG/HR   )          939.688        939.688        0.299438E-08
     ENTHALPY(WATT    )     -0.172245E+07   -0.169560E+07   -0.155864E-01

                 ***  CO2 EQUIVALENT SUMMARY ***
   FEED STREAMS CO2E            0.00000      KG/HR
   PRODUCT STREAMS CO2E         0.00000      KG/HR
   NET STREAMS CO2E PRODUCTION   0.00000      KG/HR
   UTILITIES CO2E PRODUCTION     0.00000      KG/HR
   TOTAL CO2E PRODUCTION         0.00000      KG/HR

                  **********************
                  ****  INPUT DATA  ****
                  **********************

   ****   INPUT PARAMETERS   ****

   NUMBER OF STAGES                                  10
   ALGORITHM OPTION                                  STANDARD
   ABSORBER OPTION                                   NO
   INITIALIZATION OPTION                             STANDARD
   HYDRAULIC PARAMETER CALCULATIONS                  NO
   INSIDE LOOP CONVERGENCE METHOD                    BROYDEN
   DESIGN SPECIFICATION METHOD                       NESTED
   MAXIMUM NO. OF OUTSIDE LOOP ITERATIONS            25
   MAXIMUM NO. OF INSIDE LOOP ITERATIONS             10
   MAXIMUM NUMBER OF FLASH ITERATIONS                30
   FLASH TOLERANCE                                   0.000100000
   OUTSIDE LOOP CONVERGENCE TOLERANCE                0.000100000

   ****   COL-SPECS   ****

   MOLAR VAPOR DIST / TOTAL DIST                     0.50000
   MOLAR REFLUX RATIO                                2.00000
   MOLAR BOTTOMS RATE            KMOL/HR             7.00000

   ****    PROFILES   ****

   P-SPEC         STAGE   1  PRES, BAR               0.0100000

   TEMP-EST       STAGE   1  TEMP, C                 95.6600
                   2                    163.800
                   3                    171.480
                   4                    173.650
                   5                    178.100
                   6                    179.900
                   7                    180.300
                   8                    180.800
                   9                    181.600
                  10                    182.500

                  ********************
                  ****  RESULTS  ****
                  ********************

   ***   COMPONENT SPLIT FRACTIONS   ***

                     OUTLET STREAMS
                     ---------------
             METOUT       R3          S9
   COMPONENT:
   METHANOL    .99584       .41630E-02   0.0000
   FAME        .97220       .27796E-01   0.0000
   GLYCEROL    .70782E-02   .43981       .55311
   GC          .18885E-03   .24234E-01   .97558
   UREA        .65912       .34088       .12993E-08
```

```
AMMONIA     .99956      .44203E-03   0.0000

***    SUMMARY OF KEY RESULTS    ***

TOP STAGE TEMPERATURE          C                    95.6110
BOTTOM STAGE TEMPERATURE       C                    182.508
TOP STAGE LIQUID FLOW          KMOL/HR              4.09688
BOTTOM STAGE LIQUID FLOW       KMOL/HR              7.06974
TOP STAGE VAPOR FLOW           KMOL/HR              1.04117
BOILUP VAPOR FLOW              KMOL/HR              7.43672
MOLAR REFLUX RATIO                                  2.10939
MOLAR BOILUP RATIO                                  1.05191
CONDENSER DUTY (W/O SUBCOOL)   WATT                 -134,510.
REBOILER DUTY                  WATT                 161,357.

****   MANIPULATED VARIABLES   ****

                                BOUNDS            CALCULATED
                             LOWER        UPPER        VALUE
MOLAR BOTTOMS RATE        KMOL/HR    6.8000       7.2000       7.0697
MOLAR DIST VAPOR FRAC                0.40000      0.60000      0.53608
MOLAR REFLUX RATIO                    1.5000       2.5000       2.1094

****    DESIGN SPECIFICATIONS   ****

NO  SPEC-TYPE     QUALIFIERS            UNIT      SPECIFIED     CALCULATED
                                          VALUE        VALUE
 1  MOLE-FLOW     STREAMS: R3           KMOL/HR     0.50000       0.50000
              COMPS:   GLYCEROL
 2  MOLE-FLOW     STREAMS: R3           KMOL/HR     0.24000       0.24000
              COMPS:   UREA
 3  MOLE-FLOW     STREAMS: R3           KMOL/HR     0.16000       0.16000
              COMPS:   GC

****   MAXIMUM FINAL RELATIVE ERRORS   ****

DEW POINT                     0.73463E-04  STAGE=  1
BUBBLE POINT                  0.37861E-04  STAGE=  3
COMPONENT MASS BALANCE        0.29364E-06  STAGE=  5 COMP=METHANOL
ENERGY BALANCE                0.71576E-05  STAGE=  1

****    PROFILES   ****

**NOTE** REPORTED VALUES FOR STAGE LIQUID AND VAPOR RATES ARE THE FLOWS
        FROM THE STAGE INCLUDING ANY SIDE PRODUCT.

                                ENTHALPY
STAGE TEMPERATURE   PRESSURE            J/KMOL            HEAT DUTY
    C            BAR            LIQUID       VAPOR        WATT

 1   95.611       0.10000E-01  -0.59761E+09 -0.16680E+09  -.13451+06
 2   163.81       0.10000E-01  -0.69244E+09 -0.44316E+09
 3   171.48       0.10000E-01  -0.71403E+09 -0.52948E+09
 4   173.66       0.10000E-01  -0.73167E+09 -0.54673E+09
 5   178.08       0.10000E-01  -0.74442E+09 -0.61670E+09
 6   179.87       0.10000E-01  -0.74637E+09 -0.64763E+09
 8   180.83       0.10000E-01  -0.75249E+09 -0.65740E+09
 9   181.57       0.10000E-01  -0.75715E+09 -0.66449E+09
10   182.51       0.10000E-01  -0.76269E+09 -0.67377E+09   .16136+06

STAGE     FLOW RATE                FEED RATE              PRODUCT RATE
        KMOL/HR                  KMOL/HR                KMOL/HR
    LIQUID     VAPOR       LIQUID    VAPOR    MIXED     LIQUID    VAPOR
 1  4.998      1.041                          0.9010    1.0411
 2  4.912      6.039
 3  4.985      6.854
 4  4.991      6.927                0.8745
 5  14.41      6.059        8.1374
 6  14.47      7.336
 8  14.49      7.410
 9  14.51      7.420
10  7.070      7.437                          7.0697

****  MASS FLOW PROFILES  ****

STAGE     FLOW RATE                FEED RATE              PRODUCT RATE
        KG/HR                    KG/HR                  KG/HR
    LIQUID     VAPOR       LIQUID    VAPOR    MIXED     LIQUID    VAPOR
 1  440.4      41.78                          79.3943   41.7780
```

2	499.4	482.2			
3	528.0	620.5			
4	546.2	649.2	33.2007		
5	1614.	634.1	906.4869		
6	1628.	795.8			
8	1648.	817.5			
9	1663.	829.1			
10	818.5	844.6		818.5152	

**** MOLE-X-PROFILE ****

STAGE	METHANOL	FAME	GLYCEROL	GC	UREA
1	0.93909E-03	0.35415E-04	0.55491	0.17757	0.26636
2	0.33029E-04	0.13326E-05	0.60604	0.38239	0.11525E-01
3	0.23940E-04	0.80468E-06	0.46079	0.53595	0.32202E-02
4	0.21445E-04	0.60240E-06	0.32737	0.66990	0.26877E-02
5	0.39227E-06	0.38227E-07	0.22836	0.77006	0.15870E-02
6	0.48767E-09	0.19878E-09	0.21608	0.78385	0.64596E-04
8	0.70526E-15	0.43830E-14	0.16867	0.83133	0.99208E-07
9	0.81189E-18	0.17645E-16	0.13236	0.86764	0.36965E-08
10	0.89790E-21	0.61421E-19	0.88942E-01	0.91106	0.12939E-09

**** MOLE-X-PROFILE ****

STAGE	AMMONIA
1	0.17880E-03
2	0.15988E-04
3	0.12621E-04
4	0.11813E-04
5	0.39934E-07
6	0.16208E-10
8	0.25666E-17
9	0.99807E-21
10	0.38004E-24

**** MOLE-Y-PROFILE ****

STAGE	METHANOL	FAME	GLYCEROL	GC	UREA
1	0.19441	0.10720E-02	0.77286E-02	0.11975E-02	0.44570
2	0.34294E-01	0.21412E-03	0.46058	0.14717	0.29728
3	0.29678E-01	0.16845E-03	0.50843	0.29756	0.11098
4	0.29360E-01	0.16631E-03	0.40494	0.40896	0.10396
5	0.60135E-03	0.13760E-04	0.35215	0.57453	0.72513E-01
6	0.77032E-06	0.75067E-07	0.36272	0.63417	0.31164E-02
8	0.11597E-11	0.19004E-11	0.29887	0.70113	0.50137E-05
9	0.13772E-14	0.85589E-14	0.24463	0.75537	0.19360E-06
10	0.15829E-17	0.34361E-16	0.17363	0.82637	0.70876E-08

**** MOLE-Y-PROFILE ****

STAGE	AMMONIA
1	0.34990
2	0.60472E-01
3	0.53185E-01
4	0.52624E-01
5	0.18977E-03
6	0.78421E-07
8	0.12683E-13
9	0.50120E-17
10	0.19465E-20

**** K-VALUES ****

STAGE	METHANOL	FAME	GLYCEROL	GC	UREA
1	207.01	30.268	0.13929E-01	0.67443E-02	1.6734
2	1038.3	160.68	0.76000	0.38487	25.795
3	1239.6	209.32	1.1034	0.55523	34.463
4	1369.0	276.06	1.2370	0.61050	38.678
5	1533.0	359.96	1.5421	0.74611	45.692
6	1579.5	377.64	1.6787	0.80905	48.245
8	1644.3	433.56	1.7719	0.84340	50.537
9	1696.2	485.05	1.8483	0.87061	52.375
10	1762.8	559.43	1.9522	0.90706	54.776

**** K-VALUES ****

STAGE	AMMONIA
1	1956.7
2	3782.2
3	4213.8
4	4454.3
5	4751.9
6	4838.4
8	4941.3
9	5021.5

```
  10    5121.8

                 ****   MASS-X-PROFILE     ****
 STAGE    METHANOL      FAME         GLYCEROL      GC          UREA
   1    0.34150E-03   0.11917E-03   0.57998       0.23798       0.18154
   2    0.10410E-04   0.38865E-05   0.54900       0.44417       0.68081E-02
   3    0.72420E-05   0.22525E-05   0.40064       0.59752       0.18258E-02
   4    0.62800E-05   0.16323E-05   0.27554       0.72298       0.14752E-02
   5    0.11216E-06   0.10114E-06   0.18767       0.81148       0.85050E-03
   6    0.13894E-09   0.52402E-09   0.17694       0.82303       0.34493E-04
   8    0.19874E-15   0.11429E-13   0.13662       0.86338       0.52399E-07
   9    0.22691E-18   0.45632E-16   0.10632       0.89368       0.19363E-08
  10    0.24850E-21   0.15729E-18   0.70749E-01   0.92925       0.67118E-10

                 ****   MASS-X-PROFILE     ****
 STAGE    AMMONIA
   1    0.34558E-04
   2    0.26783E-05
   3    0.20292E-05
   4    0.18387E-05
   5    0.60691E-08
   6    0.24542E-11
   8    0.38443E-18
   9    0.14826E-21
  10    0.55903E-25

                 ****   MASS-Y-PROFILE     ****
 STAGE    METHANOL      FAME         GLYCEROL      GC          UREA
   1    0.15524       0.79208E-02   0.17738E-01   0.35242E-02   0.66707
   2    0.13763E-01   0.79516E-03   0.53127       0.21767       0.22361
   3    0.10504E-01   0.55165E-03   0.51720       0.38813       0.73617E-01
   4    0.10038E-01   0.52617E-03   0.39794       0.51532       0.66619E-01
   5    0.18411E-03   0.38982E-04   0.30988       0.64826       0.41610E-01
   6    0.22753E-06   0.20517E-06   0.30793       0.69034       0.17253E-02
   8    0.33682E-12   0.51074E-11   0.24949       0.75050       0.27293E-05
   9    0.39495E-15   0.22712E-13   0.20164       0.79836       0.10406E-06
  10    0.44656E-18   0.89701E-16   0.14079       0.85921       0.37477E-08

                 ****   MASS-Y-PROFILE     ****
 STAGE    AMMONIA
   1    0.14851
   2    0.12899E-01
   3    0.10005E-01
   4    0.95632E-02
   5    0.30880E-04
   6    0.12312E-07
   8    0.19579E-14
   9    0.76396E-18
  10    0.29188E-21

              ************************************
              ***** COLUMN TARGETING RESULTS *****
              ************************************
*** THERMAL ANALYSIS ***
STAGE TEMPERATURE   PRESSURE   ENTHALPY DEFICIT   EXERGY LOSS   CARNOT FACTOR
    C            BAR            WATT          WATT
  1  95.611      0.10000E-01   0.13451E+06      10492.       0.19148
  2  163.81      0.10000E-01    82814.          5278.3       0.31766
  3  171.48      0.10000E-01   0.13278E+06      343.04       0.32945
  4  173.66      0.10000E-01   0.10707E+06      1602.7       0.33271
  5  178.08      0.10000E-01    15928.          2980.9       0.33926
  6  179.87      0.10000E-01    28634.          62.118       0.34186
  8  180.83      0.10000E-01    67036.          62.442       0.34326
  9  181.57      0.10000E-01   0.10188E+06      126.95       0.34432
 10  182.51      0.10000E-01   0.16136E+06      99.562       0.34567

                 ***  ASSOCIATED  UTILITIES  ***
UTILITY USAGE:  CW       (WATER)
-----------------------------
CONDENSER                4611.7719                  2.8458-05
                 -------------              -------------
TOTAL:                   4611.7719  KG/HR            2.8458-05  $/SEC
                 =============
UTILITY USAGE:  ST-1BAR   (STEAM)
-----------------------------
REBOILER                 202.0469                   1.3303-04
                 -------------              -------------
TOTAL:                   202.0469  KG/HR            1.3303-04  $/SEC
                 =============
```

Table F-9. Utilities of the direct carboxylation plant and glycerolysis plant.

Direct carboxylation plant

Section 1	$/hr	$/oper-year	Section 2	$/hr	$/oper-year
R101	21.8751	183750.81	P201	1.6559	13909.77
SEP101	0.0344	289.08	P202	0.0375	314.91
DEC101	0.0001	0.53	H201	10.9320	91828.38
E101	0.1311	1100.88	H202	0.0674	566.23
E102	0.1042	875.58	COM201	1.0634	8932.24
E103	0.0273	229.09	R201	3.1888	26785.56
HX101	0.0000	0.00	SEP201	0.0007	5.64
F101	0.4606	3869.30	F201	2.8497	23937.66
Total	**22.63**	**190115.27**	F202	9.7471	81875.83
			T201(C+R)	58.8382	494240.56
			T202(C+R)	3.5512	29830.37
			E201	0.0810	680.10
			E202	0.0360	302.33
			Total	**92.03**	**773209.58**

Glycerolysis plant

Section 1	$/hr	$/oper-year	Section 2	$/hr	$/oper-year
R101	21.8621	183641.97	F201	0.9800	8232.27
SEP101	0.0569	477.81	F202	0.0101	84.62
DEC101	0.0001	0.56	H201	0.0777	652.81
E101	0.1312	1102.44	H202	0.1112	934.18
E102	0.2683	2253.67	R201	14.8420	124672.48
E103	0.1038	871.55	SEP201	0.0007	5.96
HX101	0.0000	0.00	E201	0.0628	527.65
F101	0.4274	3590.34	E202	0.0025	20.77
Total	**22.85**	**191938.34**	E203	0.0435	365.22
			E204	0.0037	30.94
			T201(C+R)	0.5814	4883.51
			Total	**16.72**	**140410.40**

Table F-10. Discounted cumulative cash flows generated by CAPCOST 2008 (All numbers in $\$10^6$).

Direct carboxylation plant

Year	Investment	d_k	FCI_L-Sd_k	R	COM_d	(R-COM_d-d_k)*(1-t)+d_k	Cash Flow (Non-discounted)	Cash Flow (discounted)	Cumulative Cash Flow (discounted)	Cumulative Cash Flow (Non-discounted)
0	1.46		29.28				(1.46)	(1.46)	(1.46)	(1.46)
1	35.13		29.28				(35.13)	(33.46)	(34.92)	(36.60)
2		5.86	23.42	88.96	79.43	8.24	8.24	7.47	(27.45)	(28.36)
3		9.37	14.05	88.96	79.43	9.47	9.47	8.18	(19.27)	(18.89)
4		5.62	8.43	88.96	79.43	8.16	8.16	6.71	(12.56)	(10.73)
5		3.37	5.06	88.96	79.43	7.37	7.37	5.77	(6.79)	(3.37)
6		3.37	1.70	88.96	79.43	7.37	7.37	5.50	(1.29)	4.00
7		1.70	-	88.96	79.43	6.78	6.78	4.82	3.53	10.78
8			-	88.96	79.43	6.19	6.19	4.19	7.72	16.97
9			-	88.96	79.43	6.19	6.19	3.99	11.71	23.16
10			-	88.96	79.43	6.19	6.19	3.80	15.51	29.35
11			-	88.96	79.43	6.19	6.19	3.62	19.12	35.54
12			-	88.96	79.43	6.19	6.19	3.45	22.57	41.73
13			-	88.96	79.43	7.14	14.46	7.67	30.24	56.19

Glycerolysis plant

Year	Investment	d_k	FCI_L-Sd_k	R	COM_d	(R-COM_d-d_k)*(1-t)+d_k	Cash Flow (Non-discounted)	Cash Flow (discounted)	Cumulative Cash Flow (discounted)	Cumulative Cash Flow (Non-discounted)
0	1.35		27.00				(1.35)	(1.35)	(1.35)	(1.35)
1	32.40		27.00				(32.40)	(30.86)	(32.21)	(33.75)
2		5.40	21.60	92.14	77.43	11.45	11.45	10.39	(21.82)	(22.30)
3		8.64	12.96	92.14	77.43	12.59	12.59	10.87	(10.95)	(9.71)
4		5.18	7.78	92.14	77.43	11.38	11.38	9.36	(1.59)	1.66
5		3.11	4.67	92.14	77.43	10.65	10.65	8.34	6.75	12.31
6		3.11	1.57	92.14	77.43	10.65	10.65	7.95	14.70	22.96
7		1.57	-	92.14	77.43	10.11	10.11	7.18	21.89	33.07
8			-	92.14	77.43	9.56	9.56	6.47	28.36	42.63
9			-	92.14	77.43	9.56	9.56	6.16	34.52	52.19
10			-	92.14	77.43	9.56	9.56	5.87	40.39	61.76
11			-	92.14	77.43	9.56	9.56	5.59	45.98	71.32
12			-	92.14	77.43	9.56	9.56	5.32	51.31	80.88
13			-	92.14	77.43	10.44	17.19	9.12	60.42	98.07