University of Nebraska - Lincoln
DigitalCommons@University of Nebraska - Lincoln

Historical Materials from University of Nebraska-Lincoln Extension

Extension

1973

G73-31 Design and Construction of Grain Bin Floors (Revised May 1979)

Gerald R. Bodman
University of Nebraska - Lincoln

Thomas L. Thompson
University of Nebraska - Lincoln

Follow this and additional works at: https://digitalcommons.unl.edu/extensionhist

Part of the Agriculture Commons, and the Curriculum and Instruction Commons

Bodman, Gerald R. and Thompson, Thomas L., "G73-31 Design and Construction of Grain Bin Floors (Revised May 1979)" (1973). *Historical Materials from University of Nebraska-Lincoln Extension*. 1652.
https://digitalcommons.unl.edu/extensionhist/1652

This Article is brought to you for free and open access by the Extension at DigitalCommons@University of Nebraska - Lincoln. It has been accepted for inclusion in Historical Materials from University of Nebraska-Lincoln Extension by an authorized administrator of DigitalCommons@University of Nebraska - Lincoln.

NebGuide

PUBLISHED BY COOPERATIVE EXTENSION SERVICE
INSTITUTE OF AGRICULTURE AND NATURAL RESOURCES,
UNIVERSITY OF NEBRASKA - LINCOLN

G 73-31
(Revised May 1979)

Design and Construction of Grain Bin Floors

Gerald R. Bodman, P.E., Extension Engineer (Livestock Systems)
Thomas L. Thompson, P.E., Professor of Agricultural Engineering

The foundation and floor for a new or used grain bin performs several functions. In addition to supporting the grain and the bin, it protects the grain from moisture and rodents, prevents settlement of the bin, and anchors the bin. Good design and careful construction are necessary to assure that the bin will perform in a satisfactory manner.

For efficient operation, a bin floor must be capable of serving as an integrated part of the total grain handling system. Requirements for the bin floor are:

1. Constructed on undisturbed or well-compacted soil to minimize settling.
2. Located on a well-drained site free of flooding hazards.
3. Structurally sound and constructed of durable materials.
4. Capable of providing the required anchorage to resist forces imposed by wind and frost as well as dynamic loads associated with loading and unloading.
5. Allow for easy loading, unloading and clean-up of grain.
6. Allow the use of unloading equipment of a size compatable with required unloading capacities.
7. Moisture-proof with respect to soil moisture migration upward through the concrete.
8. Provide ducts of adequate size for aeration (grain stored at below 14% moisture) or drying as appropriate (especially important if a partially perforated floor is to be used).
9. Prevent entrance of rodents.

While the recommendations herein are generally adequate for bins up to a capacity of about 15,000 bu. (529m^3), the recommendations of the manufacturer should be followed when possible. Changes which might be necessary as bin sizes increase are thickness of concrete, width and depth of footing, number, size and placement of reinforcing bars, and unloading considerations. A method for removing the grain is essential in all cases. Likewise, all bins should be provided with provisions for aeration. For maximum flexibility in using the bin, consideration should be given to features which will allow introduction of sufficient quantities of air to enhance drying when necessary. This would include such features as air inlet ducts and partial or full-perforated or false floors.

Location

Bins should be located in or near the farmstead. The site should be well-drained, free from surface water, and away from any possible flooding. An area protected from snowdrifts and mudholes is desirable. Provide an all-weather access route for convenience in filling and unloading the bin.

Alternate Floor Types

The best style floor for a given bin will depend on the unloading method. The unloading

Adapted from information from the Midwest Plan Service.

equipment manufacturer should be contacted for specific recommendations. A sloping floor *(Type A)* is often used when unloading is via a portable auger. A *Type B* floor design allows the use of a more permanent unloading system. Both styles require the use of a sweep auger for final unloading.

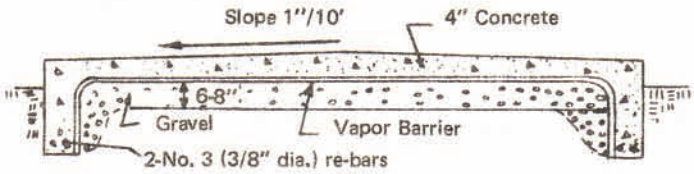

Type A. Sloping Floor[1]

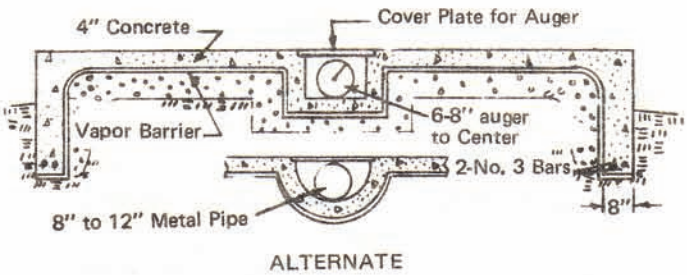

Type B. Flat Bottom

A vapor barrier of 4-6 mil polyethylene (plastic), or equivalent, should be placed under the floor to prevent moisture from moving up through the concrete. Satisfactory performance of the vapor barrier requires care to avoid puncturing the plastic during layout and placing of the concrete.

In all cases the footing should be extended to a depth below the normal frost level. A wider footing might be needed in soils with low bearing strength, such as clay.

Alternate Wall Anchors

Anchors are needed to keep the bin aligned on the foundation and to stabilize it during windy conditions. Good anchorage is especially important when the bin is empty. Requirements for a good anchorage system include: lugs, hooks or other techniques to increase the bonding between the anchor and concrete to prevent withdrawal from the concrete footing; compatability with the provisions for anchorage on the bin selected; durability; economical; freedom from interference with loading, unloading, or aeration operations. The linkage between the bin and anchors embedded in the concrete is also very important. Three common anchorage systems are shown as Figures 1, 2, and 3. The best one to use will depend upon the bin type and owner preference.

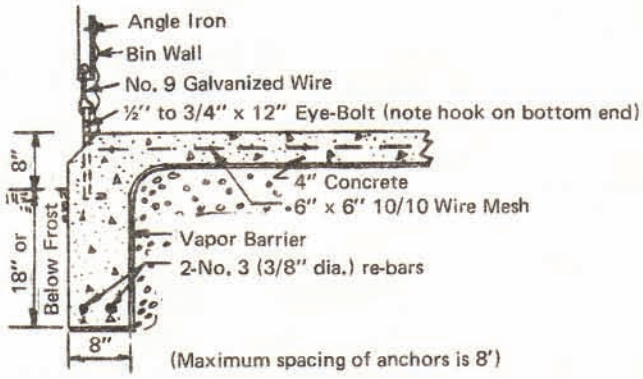

Figure 1. Eye Bolt and Wire.

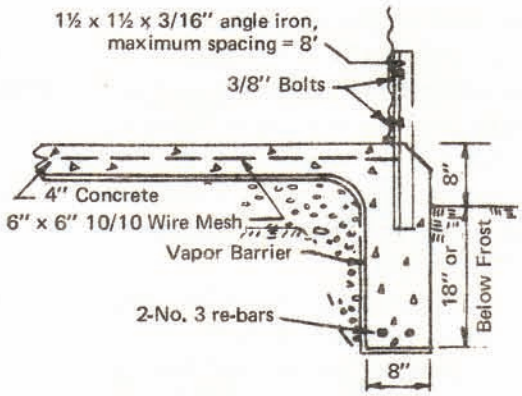

Figure 2. Angle Iron and Bolts. (Provide at least one welded lug or hook per angle iron to prevent withdrawal. Careful alignment of angle irons is necessary to prevent pulling the bin "out-of-round" when bolts are tightened.)

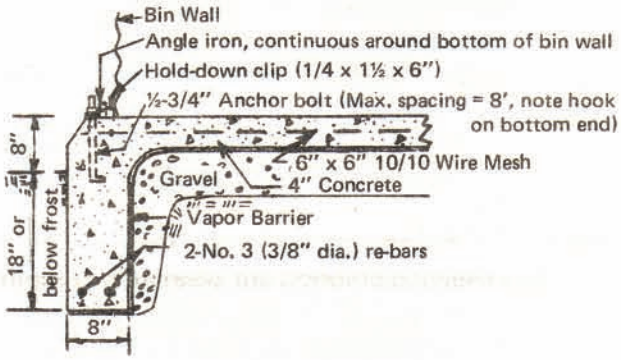

Figure 3. Anchor Bolt and Hold-Down Clip.

[1] For metric equivalents of measurements, see *Table 2.*

Forming

Careful forming is necessary to assure that the foundation and floor are "round" and level. Erecting the bin in an "out-of-round" position could lead to many problems, including damage to unloading equipment. In severe cases, the unloading equipment could be rendered totally inoperative. A non-level floor will result in difficulty in erecting the bin, impose undue stresses on bin walls and anchors, and increase the amount of damage to the grain.

An alternative to a round base is to use 2" (5 cm) dimension lumber as a form and produce a multi-sided base.

The forms should be rigid and well-braced. Oil the forms before placing the concrete to facilitate form removal. Spade or vibrate the concrete next to the forms to prevent air pockets or honeycombs.

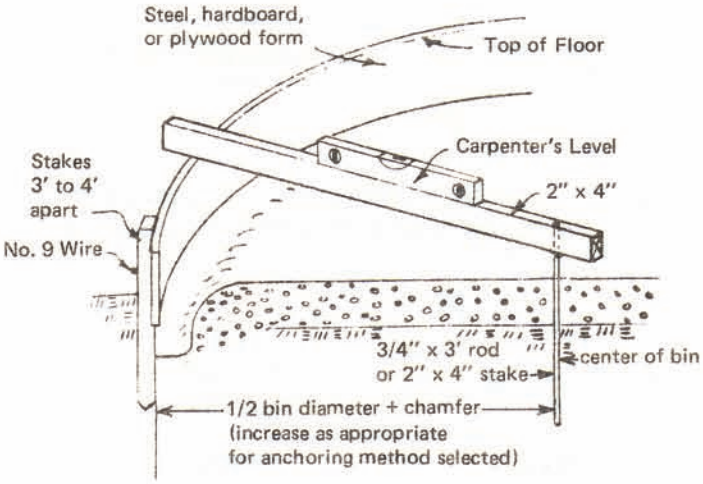

Providing a chamfer (beveled edge) along the base of the bin wall reduces the potential for the accumulation of dirt and precipitation and the likelihood of water seeping into the bin. Methods suggested for forming the chamfer are:

Method 1. As soon as the concrete is firm, remove the concrete around the edge with a steel trowel. Then float with a wooden float.

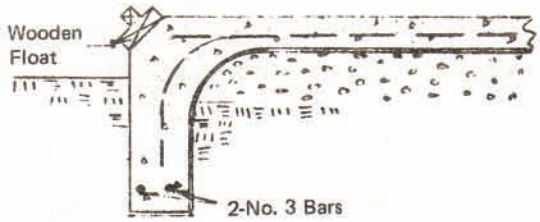

Method 2. After the concrete is firm, use a tiling spade and trowel to remove the edge. Make the ledge smooth and level. The rest of the surface can be left rough to provide a better surface for grouting. After the bin has been placed on the ledge, grout in a concrete seal.

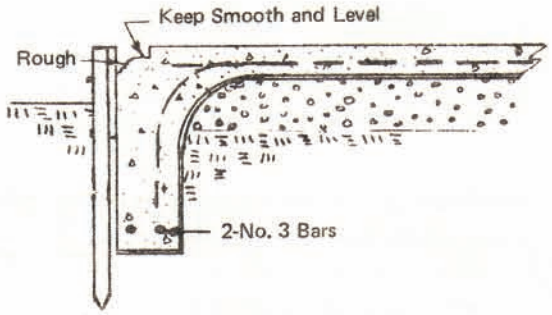

Place and level the concrete. Float when the water sheen disappears, then use a steel trowel for the final finish. Smooth concrete makes unloading much easier. Overtroweling results in a "poor" quality surface layer which is subject to rapid deterioration.

Concrete Usage

Use the water-cement ratios given in *Table 1.* Do not increase the amount of water per unit of cement. Too much water results in a poor quality (low strength) concrete. The concrete should be just wet enough for good workability. It should not flow.

If ready-mix concrete is to be used, order concrete with a minimum compressive strength of 3000 psi [11,684 kPa (6 bag mix)]. Lower strength concrete is more likely to incur damage from freezing and thawing. The concrete should be mixed to a medium consistency [3" (7.6 cm) slump]. The use of air-entrained concrete is recommended.

The concrete should be kept damp for five to seven days following placement to help assure development of high quality concrete (high compressive strength) and minimize the occurrence of curing cracks. Good curing can be achieved by covering with a plastic cover with a 6-8 in. (15-20 cm) layer of straw over the plastic. The covering should be dampened and cooled by a water spray at least once daily. Protect the concrete from freezing temperatures during the initial seven days of curing. Direct sunlight should be avoided to

Table 1. Recommended proportions for on-farm mixed concrete.

Max. size aggregate	Gallons (liters) of water added for each sack of cement, using:			Suggested mixture for 1-sack trial batches[4]			Sacks Cement Per cu. yard (.8m^3)
	Damp[1] sand	Wet[2] (average) Sand	Very[3] Wet Sand	Cement[5] sacks cu. ft.	Aggregates Fine cu. ft.	Aggregates Coarse cu. ft.	
1" (2.54 cm)	5½ (20.8)	5 (19)	4½ (17)	1 (.03m^3)	2¼ (.06m^3)	3 (.08m^3)	6¼
1½" (3.81 cm)	5½ (20.8)	5 (19)	4½ (17)	1 (.03m^3)	2½ (.07m^3)	3½ (.1m^3)	6

1/ Damp sand will fall apart after being squeezed in the palm of the hand.

2/ Wet sand will ball in the hand when squeezed, but leaves no moisture on the palm.

3/ Very wet sand has been recently rained on or pumped.

4/ Mix proportions will vary slightly depending on gradation of aggregates.

5/ Use air-entrained portland cement in concrete.

keep temperatures low and avoid uneven or too rapid drying.

Before placing any grain on the floor, allow the concrete to cure and dry for 30 days. If you must place and store the grain during the 30 days curing time, cover the floor with 4 mil polyethylene.

Concrete should never be placed over frozen ground. In cold weather, use Type III portland cement, or Type I with calcium chloride dissolved in the mixing water at the rate of 2 lbs. (.9 kg) per bag of cement. Do not increase the amount of calcium chloride as doing so will result in a low quality concrete. Heat the mixing water [not over 180°F (82°C)] and the aggregates if necessary so the mix will be 50 to 70°F (10 to 20°C). Keep the concrete at 50°F (10°C) for seven days for Type I cement, or four days for Type III. In general, concrete should not be placed when night time temperatures are below 20°F (-7°C).

Bin Wall Seals

A good seal is needed around the base of the bin wall to keep water and dirt out, reduce the openings through which insects might enter the bin, and prevent short-circuiting of aeration or drying air. Place a liberal amount of good quality asphalt-base mastic or sealing compound on the floor before setting the bin wall into position. Complete the seal by adding mastic on both sides of the bin wall following final adjustment and tightening of all bolts and anchors. Check each year and replace as necessary.

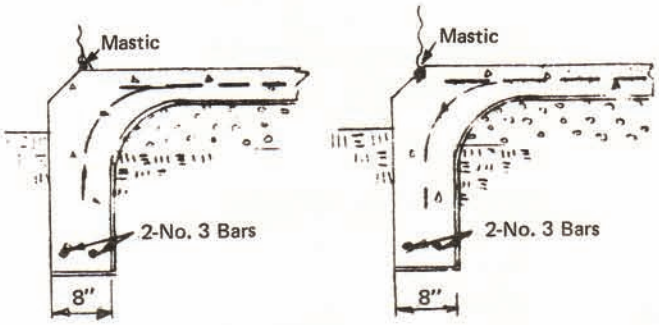

Table 2. The English measurements used in the illustrations in this NebGuide convert to the following metric equivalents.

English	*Metric*
3/16 inch	0.48 cm
3/8 inch	0.95 cm
1/2 inch	1.27 cm
3/4 inch	1.91 cm
1 inch	2.54 cm
1½ inches	3.81 cm
2 inches	5.08 cm
4 inches	10.16 cm
6 inches	15.24 cm
8 inches	20.32 cm
12 inches	30.48 cm
18 inches	45.72 cm
3 feet	0.9 m
4 feet	1.2 m
8 feet	2.4 m
10 feet	3.0 m

Extension work in "Agriculture, Home Economics and subjects relating thereto," The Cooperative Extension Service, Institute of Agriculture and Natural Resources, University of Nebraska-Lincoln, Cooperating with the Counties and the U.S. Department of Agriculture
Leo E. Lucas, Director

The Cooperative Extension Service provides information and educational programs to all people without regard to race, color or national origin.

File Under: FARM BUILDINGS
D-1, Crop Storage and Drying
Revised May 1979, 10,000