University of Nebraska - Lincoln
DigitalCommons@University of Nebraska - Lincoln

Historical Materials from University of Nebraska-Lincoln Extension

Extension

1993

NCR93-497 Kitchen Planning

Wanda Olson
University of Minnesota - Crookston

Delores Ginthner
University of Minnesota

Becky Yust
University of Minnesota

Follow this and additional works at: https://digitalcommons.unl.edu/extensionhist

Part of the Agriculture Commons, and the Curriculum and Instruction Commons

Olson, Wanda; Ginthner, Delores; and Yust, Becky, "NCR93-497 Kitchen Planning" (1993). *Historical Materials from University of Nebraska-Lincoln Extension*. 1843.
https://digitalcommons.unl.edu/extensionhist/1843

This Article is brought to you for free and open access by the Extension at DigitalCommons@University of Nebraska - Lincoln. It has been accepted for inclusion in Historical Materials from University of Nebraska-Lincoln Extension by an authorized administrator of DigitalCommons@University of Nebraska - Lincoln.

North Central Regional
Extension Publication 497

Kitchen Planning

Wanda Olson, Delores Ginthner, and Becky Yust

The authors wish to thank the following individuals for their review of this publication:

Complete Manuscript:

Mr. Jim Krengel, CKD
Ms. Bobbi Levitan
Dr. Evelyn Franklin

Universal Design Section:

Ms. Diane Sprague
Ms. Margaret Christianson
Ms. Sue Lasoff
Ms. Shannon McGurran
Ms. Julee Quarve-Peterson

Energy Efficient Construction:

Mr. Patrick Huelman
Dr. Timothy Larson
Mr. Stan Wrzeski

Photo credits:

cover - Kitchens by Krengel Design Team
page 1- Photographer Jim Mims; Kitchens by Krengel Design Team

page 14- Whirlpool Corporation

About the authors:
Wanda Olson is an associate professor and extension housing technology specialist, Department of Design Housing and Apparel, College of Human Ecology, Minnesota Extension Service, University of Minnesota.

Delores Ginthner is an assistant professor, Department of Design, Housing and Apparel, College of Human Ecology, University of Minnesota.

Becky Yust is an assistant professor, Department of Design, Housing and Apparel, College of Human Ecology, University of Minnesota.

ISBN 0-9623116-5-0

Kitchen Planning

Contents

	Page
What You Need to Do	2
Planning Stage	2
Construction Stage	2
Identification of Household Needs	2
Questions to Ask	3
Kitchen Remodeling Considerations	4
Investment	4
Removing Walls	4
Moving the Kitchen	4
Moving Plumbing and Wiring	4
Improving Energy Efficiency	4
Health Hazards	4
Getting Professional Help	5
Kitchen Remodeling Costs	6
Developing the Kitchen Plan	7
Determining Kitchen Location and the Space Needed	7
Measuring and Scale Drawing	7
Testing Possible Kitchen Arrangements	8
Determining Work Center Arrangements	9
Design Considerations	11
Small Kitchens	11
Doors and Windows	11
Energy Efficiency	11
Indoor Air Quality	11
Storage for Recyclables and Returnables	12
Composting	12
Design for Universal Use	13
Safety Features	13
Features for Ease of Use and Accessibility	13
Adaptability Features	14
Planning for Work, Storage, and Clearance Space	15
Work Space	15
Counter Surface Recommendations	15
Storage Space	16
Cabinets	16
Clearance Space	17
Kitchen Design Checklist	19
Aesthetic Considerations	21
Form and Function	21
Accessories	21
Color	21

Contents

	Page
Selection of Equipment	21
Appliances	21
Water Treatment	22
Wiring	22
Ventilation	22
Fire Extinguisher	23
Lighting	23
Selection of Furnishings	27
Cabinets	27
Judging Cabinet Quality	28
General Criteria	28
Drawers	29
Shelving	29
Finishes	29
Materials	29
Installation	29
Remodeling	30
Refinishing and Refacing Wood Cabinets	30
Countertops	30
Materials	30
High Pressure Decorative Laminates	30
Butcher Block	31
Ceramic Tile	31
Stone	31
Solid Surface	31
Combinations of Countertop Surfaces	31
Installations	31
Sinks	31
Flooring	31
Vinyl Composite Tile	32
Vinyl Tile and Sheeting	32
Hard Tile Flooring	32
Kitchen Carpeting	32
Wood and Parquet Flooring	32
Seamless Poured Acrylic Flooring	32
Subflooring	33
Walls	33
Paint	33
Wallpaper	33
Wood	33
Laminates	33
Solid Surfaces	33
Ceramic Tile	33
Ceilings	34
Windows	34
Window Treatments	34
Charts	35
Chart I Utility and Space Needs of Kitchen Equipment	35
Chart II Countertops	41
Chart III Flooring	43
Resources	45

Kitchen Planning

Decisions you make about your kitchen depend upon your current and future needs, your lifestyle, your interests and the structural limitations of the house. A well-designed kitchen should be functional and aesthetically pleasing. It should harmonize with other areas of the house for a consistent appearance. The materials and furnishings you choose affect the appearance, character, and functionality of the kitchen. In addition, kitchen design can have a major impact on the energy system of the whole house. This publication provides information to help you make those decisions as you build or remodel your kitchen.

What You Need To Do

Your kitchen remodeling or building will take less time if the tasks are completed in the order which follows. Be prepared for everything to take longer and cost more than expected.

Planning Stage

- identify household needs
- determine general location of the kitchen and actual kitchen space plan
- develop the plan including work and storage areas, plumbing, wiring, lighting, and ventilation
- secure needed building permits

Construction Stage

- lay foundation
- construct or change exterior walls, roof, and floor framing including insulation and vapor retarder
- install or change windows and doors
- install or change plumbing, wiring and duct work
- install dry wall and subflooring
- install cabinets and appliances
- install floor covering (some types may be installed before cabinets)
- install countertops
- install sinks
- install wall covering (some types may be installed before the cabinets)

Identification of Household Needs

A good kitchen plan is your best investment in time and money. Planning a kitchen requires decisions balancing the scope of intended use, good design, and cost. List your needs in relation to use, appearance, and cost and then decide the importance of each. Only after considering your household needs can you analyze your situation and determine the help you will need.

Investigate *universal design* which allows ease of use for all people throughout their lives. Universal design benefits children, elderly persons and persons with disabilities ranging from mobility or vision loss to a weak grasp due to arthritis.

Questions To Ask

How many people use the space and share in food preparation?
If several people cook, you may need larger or multiple work areas and storage accessible to all users.

What is the size of the household?
Households with more people may need more eating and storage space.

What are the heights of the people?
If the primary cook is much shorter than average or uses a wheelchair, some lower work surfaces should be incorporated.

What are the ages of household members?
With young children and older people there will be higher priority for surfaces that are easily cleaned, accessible, and safe.

Do any members of the household have physical limitations such as back problems, arthritis, mobility impairment, etc.?
People with such limitations can function more easily if kitchens have more drawers, roll-out shelves, and D- or U-shaped handles on cabinets.

Who cleans the kitchen and how much time is spent on cleaning it?
If time is minimal, it will affect all choices. Durable and easy-to-clean materials are important.

What activities must the kitchen space accommodate in addition to cooking?
Some people use the kitchen space for socializing, household business, a study, TV-watching, sewing, laundry, pet-feeding, and storage for related items.

Are there hazardous materials in the kitchen?
Storage for cleaning products, medicines and hobby related products should be out of reach of children.

Are there special storage needs?
Storage may be necessary for soft drinks and bottled water; recycling bins; canning, freezing, and food drying equipment; coats, boots, and brooms. Additional separated storage is needed in kosher kitchens.

Do you keep small appliances out or prefer a clear countertop?
Storage in cabinets or on counters may need to accommodate larger, bulkier items.

How often do you entertain and how?
Entertaining large groups means storage for serving pieces, additional counter space, and easy access to dining area.

What are the eating habits of the household members?
A snack counter or an attached table may function best when members eat at different times.

What are the preferences for color and design?
Consider preferences as you choose colors, shapes, textures, and patterns for kitchen furnishings.

What character or style is desired?
Select an overall feeling that blends with your lifestyle and the rest of the house be it formal, informal, traditional or contemporary.

What fits within your budget?
There is a range in cost with all choices.

How long do you expect to use the furnishings and materials?
Durability affects the initial purchase price.

Will the total plan be completed immediately?
Set priorities. Some things are needed immediately, others may be added as finances permit.

What are the effects of your choices of furnishings, equipment and materials?
Your decisions involve many tradeoffs. These include your time, energy, and money, as well as natural resources and the environment. In general, choose products that are durable and do not harm the environment or the health of the occupants.

Kitchen Remodeling Considerations

Remodeling a kitchen is time-consuming, dirty, and may mean going without water, gas, and electricity in the kitchen for several days. It also means you avoid costs associated with selling, moving, building, or buying. However, home improvement financing, unless part of a special program, generally carries a higher interest rate than that of a home mortgage. You may be able to do some of the work yourself. Consider the skills, experience, time, and energy you have available for this project.

Publications identifying building practices relating to energy efficiency and safety are available from your county extension service offices, state and county building and health divisions, bookstores, and libraries.

Investment

Remodeling which improves the kitchen may increase the resale value of the house. Usually remodeling is a good investment when the kitchen is in poorer condition than the rest of the house and the mechanical systems are not up to code. It may not be a good investment when all of the house is in poor condition, or if remodeling increases the value of the house far above the value of the existing houses in the neighborhood.

Removing Walls

Most remodeling is done within the present kitchen area. Additional space may be added from a pantry, hallway, or an adjacent room. Removing an interior wall is not difficult if it is not a load-bearing wall, and if it does not contain plumbing, gas lines, wiring, or ductwork for heating. In conventional rafter and joist construction, interior walls are normally located to serve as load-bearing for ceiling joists as well as room dividers; walls located parallel to the direction of the ceiling joists are commonly non-load-bearing.

Moving the Kitchen

Moving the kitchen to a totally different part of the home, such as converting a dining room, depends somewhat on the location of the present or proposed kitchen in the house. Consider the space needed, traffic patterns, and the willingness to rewire and replumb.

Moving Plumbing and Wiring

If your remodeling includes rearranging or adding cabinets and appliances, you will probably need to make changes in wiring, lighting, and plumbing. Moving the sink to a more convenient location is a major consideration. Sinks need to be located near the vent stack and a drain pipe. Adding a dishwasher may require changes in both the plumbing and electrical systems. Improving kitchen ventilation by adding a range hood or downdraft unit usually means installing ductwork.

Improving Energy Efficiency

During remodeling, it may be an opportune time to reduce the heat loss from the house and make it more energy efficient. This usually means reducing air leakage and increasing the R-value of the wall and ceiling. Seal the bypasses (hidden gaps) where warm air may leak from the kitchen area. These include areas above the interior walls and soffits, around electrical outlets, recessed light fixtures, plumbing, ventilation ductwork, and chimneys. Building deterioration can occur if warm moist air is allowed to enter wall cavities and the water vapor condenses on cold surfaces.

Health Hazards

Asbestos and lead are two environmental hazards which may be present in older homes. Asbestos products may be present in vinyl composite floor tiles and in some ceiling tiles. These are generally not found in products installed since 1970. Lead-based paint for home interiors and exteriors was commonly used prior to the 1960s and in some cases more recently. In addition, indoor lead plumbing (prior to the 1930s) or lead-based solder (banned in 1986) may have been used. In some neighborhoods, lead service lines connecting homes to water mains in the street are still common. Contact your community health service for further information.

Getting Professional Help

In deciding whether or not to get professional help, ask yourself:

> Will you be developing a total kitchen plan which includes selecting cabinets and appliances? Will you also be improving or replacing wiring, plumbing and ductwork, changing or reinforcing walls, and changing windows and doors? If the answer is yes to most of these, then it is very important that you hire the professional service and experience you need.

Professionals are helpful because of their skills, experience, and knowledge. To avoid unnecessary expenses, plan the entire kitchen before any actual work is done, even if you plan to do the work in stages. Expensive cabinets and appliances won't improve a poor plan. Compare cost estimates of alternative plans and choices. Kitchen professionals who will be working on your project should be a part of the early planning to help you make informed choices.

Before selecting professionals to help you, check their business reputation with your mortgage officer, local housing authority, or the Better Business Bureau. If you are remodeling, ask about their experience in remodeling kitchens. If you are building a new home, ask about their experience with kitchen design and the total house energy system. To get some measure of a professional's future performance, ask for references and contact former clients who have been in their kitchens long enough to know if the design works over time.

Written agreements should indicate specifically:

- what will be done and how it is to be done
- what equipment and materials will be used and how the materials will be finished
- the work schedule and that all work is in compliance with any applicable codes
- the method of payment and satisfaction of liens

In some cases, the agreement may stipulate what is not to be done or what is the owner's responsibility. People vary greatly in experience and skills, but you can expect the following professionals to have the capabilities listed below:

Certified kitchen designers (CKD) identify household needs, prepare complete kitchen plans and specifications, hire subcontractors and get permits. CKDs meet stringent requirements for knowledge and ability to design kitchens and must have an established reputation for high quality work and satisfied customers.

Kitchen planners identify household needs with relation to the whole house. They prepare complete plans and specifications or limited plans.

Architects, and interior designers identify household needs with relation to the kitchen and to the whole house. They prepare complete kitchen plans and specifications.

Contractors coordinate all phases of building or remodeling from start to finish, including hiring subcontractors and getting permits.

Kitchen Remodeling Costs

The following table illustrates relative costs in kitchen remodeling for a 10' x 13' L-shaped kitchen based on 1993 figures.

	Materials	Labor
Countertops:*		
Post-Formed Decorative Laminate	$80 - $120	$90
Self-Edged Decorative Laminate	80 - 120	270
Solid Surface	1,050	250
Floor:		
Vinyl Composite Tile	70 - 130	190
Vinyl Sheeting	70 - 400	45
Ceramic Tile	450 - 750	300
Drywalling:		
Taping Walls and Ceilings	260	490
Cabinets:		
Low	1,000 - 1,600	
Middle	2,500 - 3,800	
High	4,000 - 10,000 & up	
Appliances:		
Range (30" freestanding)		
Low	220 - 400	
Middle	450 - 650	
High	750 - 1,250 & up	
Refrigerator (19 cubic feet)		
Low	650 - 750	
Middle	800 - 900	
High	950 - 2,000	
Dishwasher		
Low	230 - 350	
Middle	400 - 500	
High	550 - 800 & up	
Sink (33" double sink) & Faucets		
Low	70 - 130	
Middle	250 - 300	
High	400 - 500 & up	

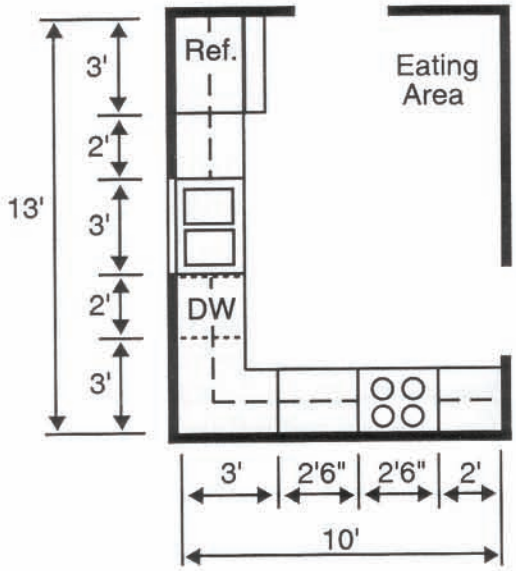

	Materials and Labor	
Plumbing**	450	includes hookups, changing water supply and drain lines but not relocating sink
Electrical**	950	bringing up to code with three-wire service, an appliance circuit, adding a few outlets, undercabinet lights, and a ground fault circuit protector.

*Does not include an integral sink.

**The plumbing and electrical systems must be brought up to code if required by a lending program, if plumbing is changed, or if updating a 30 amp service.

Developing The Kitchen Plan

Determining Kitchen Location and the Space Needed

Locate the kitchen to avoid general traffic through its work area and to be convenient to the dining and living areas of the house. Here are some other things you may want to consider when choosing the kitchen location:

- convenience to yard or outside work area.
- need for window to look out at yard or work area to, for instance, watch small children.
- convenience for unloading groceries and disposal of garbage, trash and recyclables.
- accessibility to an exterior door.

Measuring and Scale Drawing

Measure the kitchen space and make a scale drawing of the room. Blueprints will give room dimensions, but for a good cabinet fit you will need to get more exact measurements after interior walls are built. Kitchen professionals will also take these measurements to insure accuracy before ordering cabinets.

Measure the length and width of the room. Measure the full distance from corner to corner and the distance of the subsections within. As a double check on your measurements, compare the overall lengths with the total of the subsections.

Measure walls with windows as shown ***(illustration A).***

Measure all corners for squareness. Find points A and B. Measure point A three feet from the corner and point B, four feet from the corner. The distance between the points should equal 5 feet. If corners are not square, some adjustments will need to be made during installation to avoid later problems requiring adjustment ***(illustration B).***

Illustration A

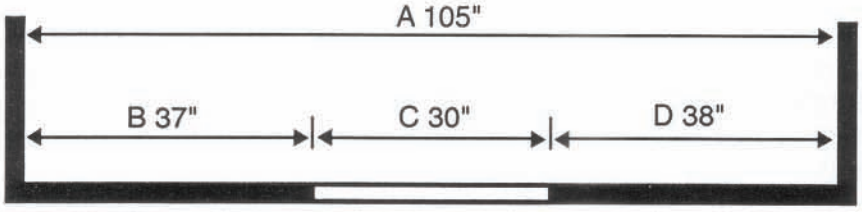

A from wall to wall

B from corner to outside trim of window

C outside window trim to outside window trim

D outside trim of window to corner

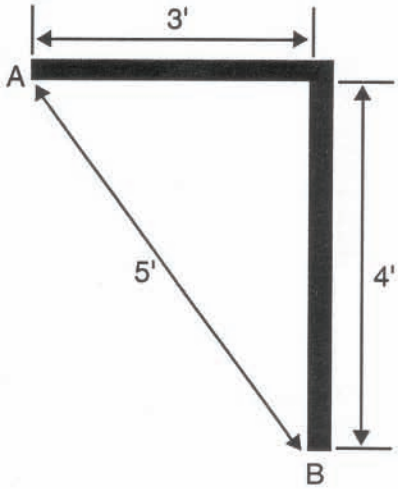

Illustration B

Measure the distance from the top of the window trim to ceiling and from the bottom of the window trim to the floor.

Measure the dimension of the soffit, if there is one, and the distance from the soffit to the floor. Measure at several locations for accuracy and to detect structural irregularities.

Make a scale drawing of the room, ½ inch to 1 foot. Draw in all windows and doors and note the direction of the door swing and the room or area into which the door opens. Draw in any chimneys, radiators, air ducts in walls, location of water supply, drainage pipes and vents, gas pipes, and electrical outlets. Indicate wall thickness and whether interior walls are load-bearing.

Testing Possible Kitchen Arrangements

The actual arrangement depends greatly on the room dimensions and the door and window placement. Changing the location of doors or windows may be necessary for a more efficient arrangement. Install all door openings with a minimum of a 32 inch clear width for universal design. Kitchens designed to be used for more than one person or by a person using mobility equipment need more space for movement and efficient use of equipment. The following diagrams illustrate the approximate space needed for 8 feet of base and wall cabinets, refrigerator, range, sink, and dishwasher arranged in the corridor, L, U, and island shapes ***(illustration C).***

Illustration C

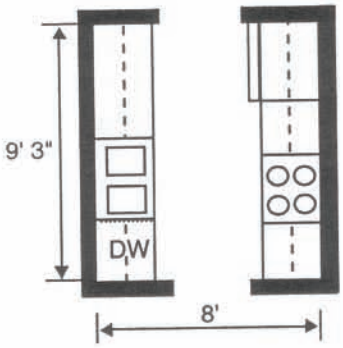

Corridor Shape
This can be used in a minimum amount of space, but is better if the corridor is not a traffic thoroughfare. For wheelchair access, a minimum of 9' between walls and 5' between cabinets is needed.

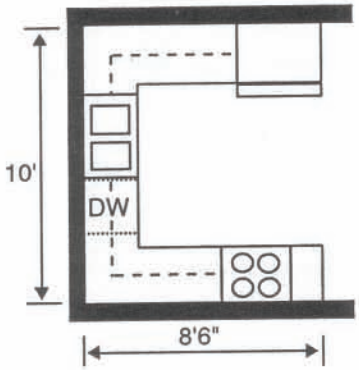

U Shape
This allows short distances between work centers and eliminates traffic through the work area. Two corner installations have potentially difficult access for storage.

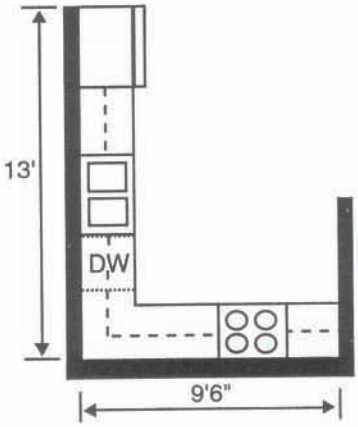

L Shape
This is an easy arrangement if more than one person uses the kitchen. One corner installation has potentially difficult access for storage.

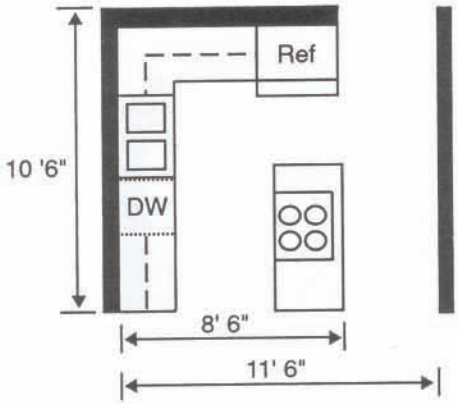

Island or Broken U Shape
The minimum counter dimension for an island is 2' 6" x 3'; larger spaces are required when the island includes an appliance.

Determining Work Center Arrangements

The kitchen is the most intensively used space in the home. Efficient kitchens need well-developed work centers. The major centers include sink and cleanup, mixing and preparation, range and cooking, and refrigerator and storage. The preparation center should be next to a water source. The serving center is often combined with the range. If desired, plan for counter or table space for eating ***(illustration D).***

Illustration D

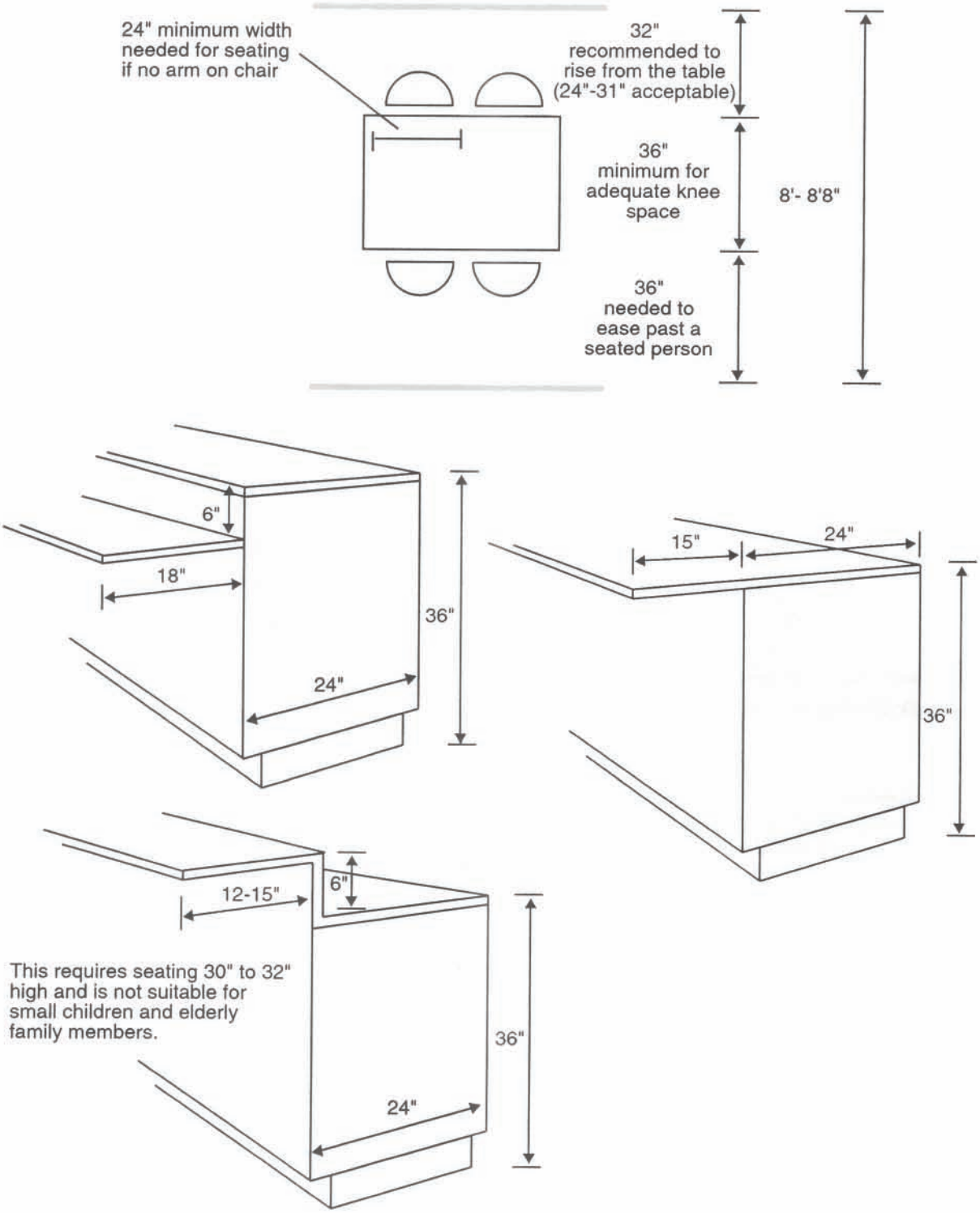

If the microwave will be replacing many range-top uses in meal preparation, it can be part of the range and cooking center. The microwave may be a separate center but should be placed close to the sink and preparation center. If the microwave is used primarily for preparing snack foods or individual items, it may be located away from the work centers. Many foods heated in the microwave come from the freezer and refrigerator and need little preparation before going into the microwave.

Arrange the work centers to reduce the amount of walking and to allow work to flow easily from one center to another. The work areas should not be split by traffic ***(illustration E)***. Normally most walking during meal preparation is between the sink and the range top. There is also a lot of walking between the preparation center and the sink and between the preparation center and the refrigerator. In order for work to flow easily, full-height, full-depth units such as refrigerator, wall oven cabinet, or pantry should not separate major work centers. Entry or appliance doors should not interfere with work centers.

Measure the distance between the sink, range or cooktop, and refrigerator. This distance is called the work triangle and should be no more than 26 feet. No leg of the work triangle should be less than 4 feet or more than 9 feet ***(illustration F)***. A work triangle of less than than 12 feet will not provide enough counter and storage space.

Illustration E

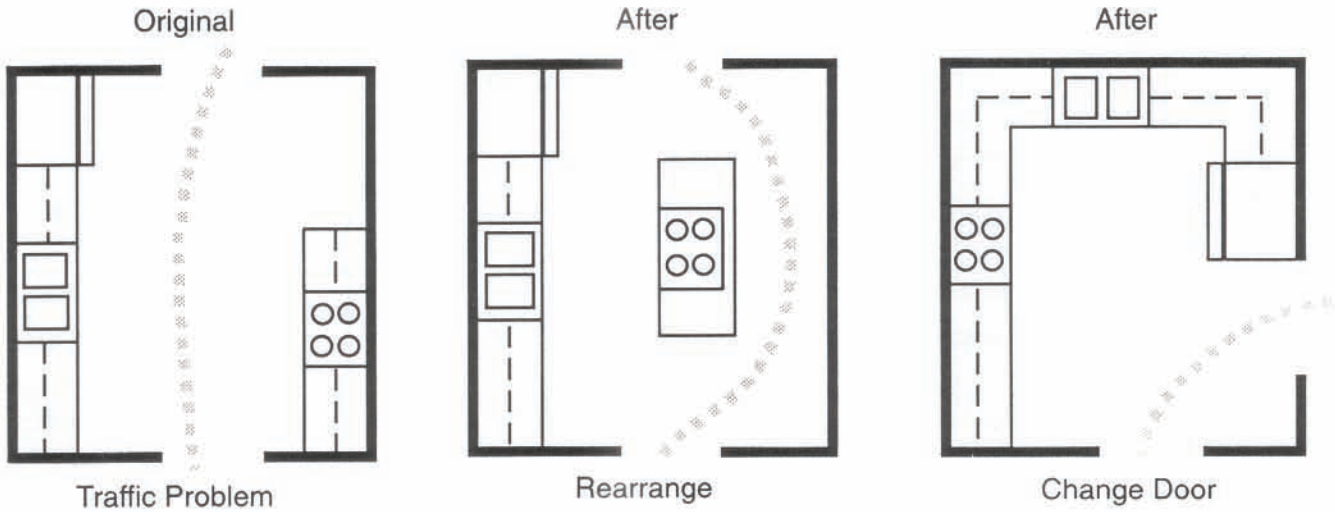

Illustration F

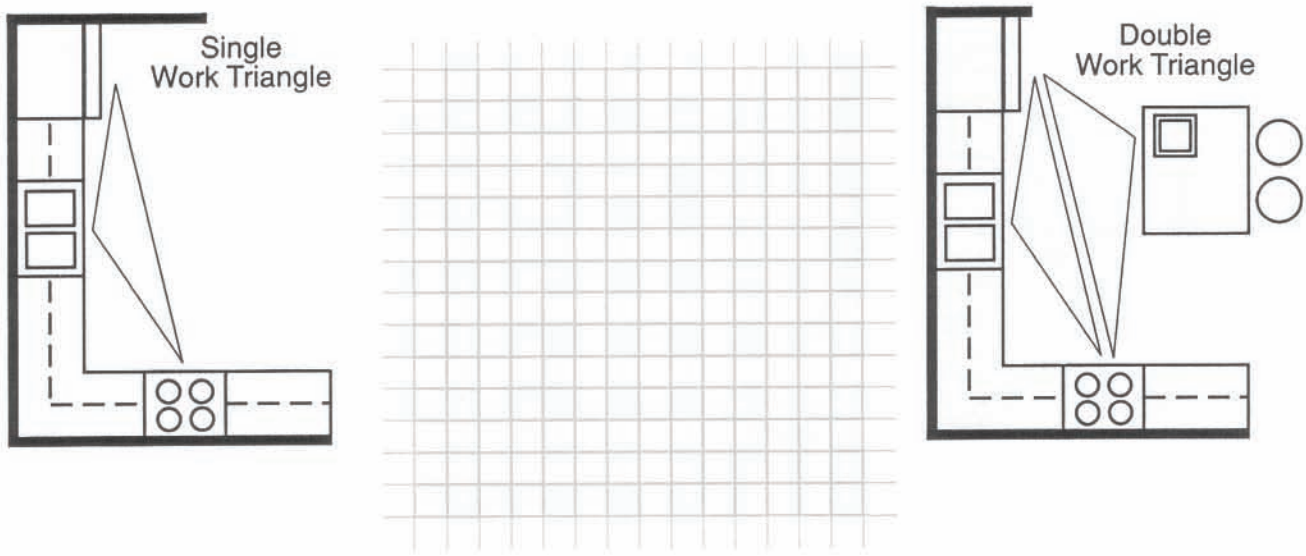

Design Considerations

Small Kitchens

In small kitchens, use smaller sized appliances. Appliances are available in widths as narrow as 18 inches for dishwashers, 18 to 20 inches for ranges, and 24 inches for refrigerators. Small-sized appliances are available separately or as part of a combination unit. These units are frequently used in efficiency apartments or in businesses. A 48-inch unit may contain a range and a sink with a dishwasher below. An 84-inch unit may contain a range, sink, dishwasher, and a 30-inch undercounter refrigerator. Individual undercounter refrigerators are available in widths as narrow as 15 inches.

It is also advised to use fewer major appliances and not to separate cooktop and oven. Create specialized storage, such as a full storage cabinet or pantry unit or build shallow storage in interior walls between studs. Investigate options to take advantage of corner cabinet storage space which is often wasted. A fold-down or pull-out table for eating can save a lot of room.

Relocating or eliminating unnecessary doors and windows can improve the traffic pattern and provide more wall space. Removing a wall between the kitchen and another room is an obvious way to make a bigger room.

To make a small room look larger use furnishings and appliances in light colors, avoid or reduce the scale of patterns on walls, flooring or countertops, and avoid rough textures and texture contrasts. Lighting should be adequate to eliminate shadows which can make a room look smaller.

Doors and Windows

Some kitchens have a lot of interruptions by doors and windows. If the room is large enough, plan the kitchen workspace in only a part of the area to avoid these interruptions. A corridor kitchen is a good solution when windows are spaced appropriately but are lower than counter height. Windows 12 inches from the floor or lower cannot accommodate countertop. Moving windows up is a common, but obviously more costly solution, mainly due to the work required on the exterior wall of the house.

Energy Efficiency

Here are some guidelines to make your kitchen more energy efficient:

Avoid penetrating vapor retarders and air barriers or displacing insulation.

Use interior walls for plumbing, ductwork, and wiring runs. If runs are on exterior walls use either a strapped-wall technique or surface-mount mechanical systems.

Avoid recessed lighting unless it is in the kitchen soffit.

If kitchen soffits are used, install a well-sealed continuous vapor retarder and air barrier directly below the insulation to prevent warm air from passing into the attic.

If installing windows, use those with high R-value. This will result in a warmer window pane, and less condensation and heat-loss.

Install energy efficient appliances. New appliances must meet new energy-efficient standards.

Indoor Air Quality

Guidelines to insure indoor air quality are:

Use a kitchen ventilation system that exhausts rather than recirculates air and that operates quietly.

Run the exhaust system when moisture is generated by cooking, making coffee, and dishwashing.

Use exhaust systems with a minimum airflow rate of 100 CFM (cubic feet per minute). Systems with airflow rates higher than 250 CFM include downdraft units and some hoods, but these require large amounts of outdoor air to balance the exhaust flow. A low flow (25 CFM) continuous exhaust may be used if a central exhaust system is installed for the entire house.

Hoods located above the range are more effective than a continuous exhaust system with a register in the ceiling or soffit.

Use hood or downdraft exhaust units with gas ranges to exhaust combustion gases.

Use range hoods which extend beyond the width of the cooking surface or have rectangular rather than beveled corners. Range hoods that more fully cover the cooking surface from back to front are more effective than those that only cover the back cooking surface.

Install cooking appliances on walls rather than in islands so that room air currents do not interfere with the capture of cooking contaminants.

Install quiet exhaust systems. Some range hoods are rated as low as 2.5 sones at the high speed. Most hoods and downdraft units are rated between 4.00-7.00 sones. Refrigerators operate at about 1.0 sone. Some models allow for a remote installation of the fan.

Determine if adding the exhaust system could cause backdrafting of a combustion furnace, water heater, or fireplace. A supply fan can be used to match the exhaust fan air requirements in order to prevent depressurization when the exhaust system is used. Changing the space heating and water heating appliances to sealed combustion or electric would eliminate the potential for backdrafting of naturally vented furnaces and water heaters.

Storage for Recyclables and Returnables

Convenient storage means separate bins for each type of recyclable. Typically the categories include aluminum and bimetal cans, steel cans, glass sorted by color, and papers. The collection of plastics varies greatly by community. Returnables include bottles for milk and water. The bin size needed depends upon volume generated and whether or not the items can be flattened or crushed. Consider also whether or not bins are expected to hold items until collection day or just temporarily.

Pull-out baskets 9 inches wide and 13 inches deep, can be used as storage modules. A drawer or pull-out basket 27 inches wide, 16 to 18 inches deep and 18 inches high will hold three grocery bags for recycling items.

A closet or pantry type storage could hold several bins.

Chute-type systems are one way to conveniently collect recyclables in storage bin(s) in the basement, an attached garage or outside. This is not recommended in cold climates if the chute goes to the outside of the house or to an unheated area because of heat loss and icing. A chute system needs to be built to meet fire code.

Composting

Composting can be used to convert plant materials such as leaves and vegetable scraps into a finished compost which can be used to increase soil organic matter. A covered stainless steel or plastic container may be used to collect food scraps for composting. Plastic containers are less expensive and light weight but they absorb odors more than metal.

To avoid attracting rats and other rodents, any food wastes such as fruit and vegetable trimmings, coffee grounds, and eggshells should not be exposed but added to the interior center of the compost piles; do not add meat, bones, grease, whole eggs and dairy products.

Design for Universal Use

Universal design accommodates varying needs throughout a person's life. The design features should be safe and easy for all users to operate and maintain, and adaptable for a variety of users.

Special needs may be temporary such as the use of crutches while a fracture heals or be more long term such as the gradual loss of vision, flexibility, and coordination that elderly persons experience. Other diseases common in elderly people such as those affecting joints, heart, lungs and high blood pressure often restrict their use of kitchens. Disabilities that have functional limitations affecting the ease of use of a kitchen are:

- *general weakness and low energy*
- *limited reach when standing*
- *impaired mobility and use of wheelchair, cane, walker or crutches*
- *difficulty in bending or kneeling*
- *dizziness when looking down or up*
- *weak or painful grasp and limited finger control*
- *little or no sensation to touch*
- *partial or total vision loss*

Universal design incorporates safety, accessibility, and adaptability features as discussed below:

Safety Features

- sink with single lever faucet controls and separate instant hot water tap
- water and drain lines installed to rear of sink
- a microwave appliance or induction cooktop
- range with front controls, cooktop with front or side controls
- oven with side-opening door (availability is limited) and pull-out board below
- non-skid floors such as vinyl and wood (ceramic tile is uneven which makes mobility difficult)
- smooth transition where floor surfaces change such as from kitchen to dining room
- telephone for emergency calls

Features for Ease of Use and Accessibility

Features for easier opening and control

- handles and controls that use the whole hand to reduce turning and twisting of the wrist or fingers.
- D- or U-shaped pulls, bails or lever handles or magnetic touch latches rather than recessed pulls or solid bars without opening.
- appliance dials $1\frac{1}{2}$ inches or greater in diameter.
- single lever faucet controls
- appliance controls located at the front or side rather than at the rear of the backsplash
- light switches no higher than 48 inches and outlets no lower than 15 inches from the floor

Features to improve viewing

- lighting over work surfaces
- readable settings and directions
- large print directions and symbols with good contrast between lettering and the background
- color contrast of surfaces to highlight areas such as edge of counter or appliance

Features to improve the work area

- counter surface or cart near appliance and storage on which to set things
- seated work space
- storage at height for easy viewing and limited reaching or bending such as a pantry unit

- pull-out shelves, baskets, drawers
- lazy susan or blind corner swing out shelves
- ice and water dispenser in refrigerator door

Features to support a person's weight:

- grab bar fastened to the front of the counter
- sturdy pull-out boards, cabinets and tables

Features that minimize maintenance:

- automatic defrost refrigerators
- self-cleaning ovens
- cooktops with solid cast-iron elements, sealed gas burners or induction units

Adaptability Features

- different counter heights or pull-out surfaces that take into account a 31 to 32 inch work height for a wheelchair user
- a minimum clearance of 29 inches under counters for wheelchair access
- drop-in range or cooktop can be installed at different heights
- dishwasher located where it could be installed higher to avoid bending
- small refrigerators which can be installed higher
- adjustable shelving in storage cabinets and refrigerators
- cabinets under a sink or cooktop without a center support (stile), removable shelves, and toe space
- finished flooring and walls under sink and cooktop so cabinets or doors can be removed
- counter surface without cabinetry beneath for access for seated worker
- 32 inch clear-width doorways (swing-free hinges can increase the clear opening)
- 36 inch wide walkways

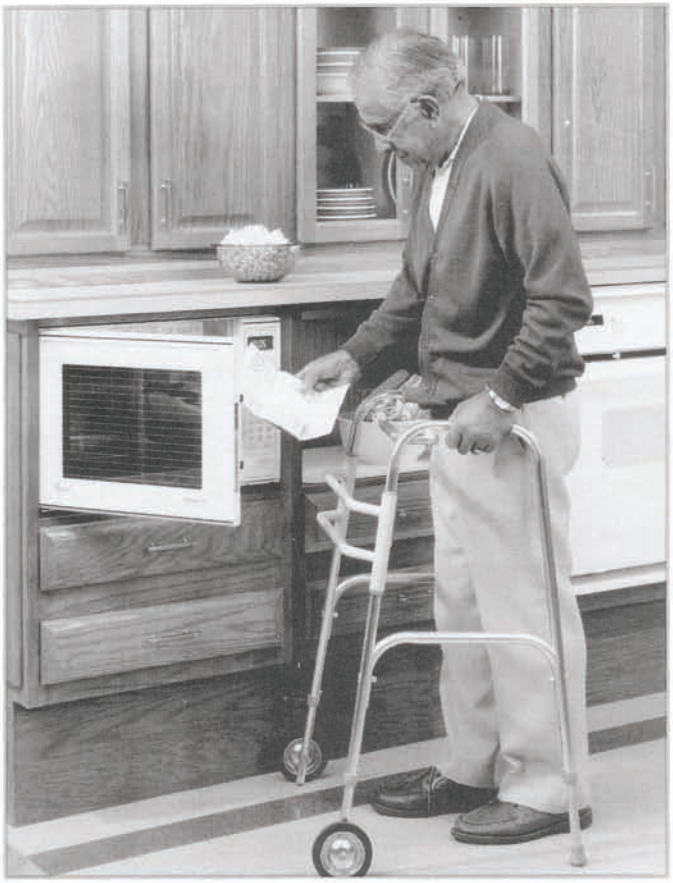

Planning for Work, Storage, and Clearance Space

When planning the work space, keep in mind that wall and base cabinets are typically available in modular increments of 3 inches and placed as shown in ***illustration G***. Counter surface and cabinet storage calculations are linear measurements along the front of the counter or cabinet, not along the wall. These measurements are referred to as frontage. In order to allow for adequate work spaces and storage, each center should meet the space recommendations based on industry guidelines developed by the National Kitchen and Bath Association. A checklist of these guidelines is included on page 19.

Illustration G

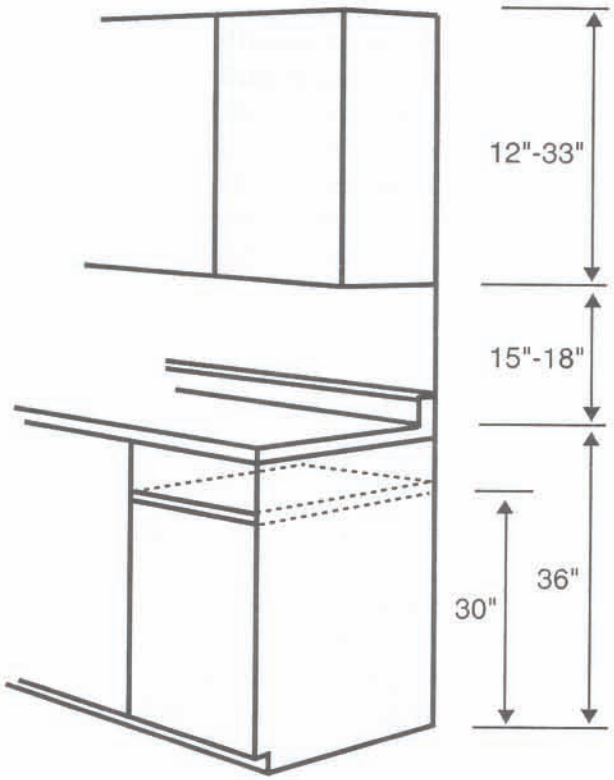

Work Space

Counter Surface Recommendations:

The total counter surface frontage should be at least 132 inches. For kitchens larger than 150 square feet, it should be 198 inches. The standard depth of counter is 25 inches but overhangs the base cabinet by one inch. Counter depth of at least 16 inches can be included in the calculations. The height of the counter should be 3 inches below the elbow height of the user; lower for tasks that require preparation such as kneading. Standard counter height is 36 inches, but a 30 inch high work surface is recommended for seated workers. Minimum counter frontage recommendations for work centers are:

Sinks

A primary sink should have 24 inches on one side and 18 inches on the other side. A second sink should have 18 inches on one side and 3 inches on the other side. A sink should never be placed closer than 3 inches to the inside corner of a countertop.

Ranges and Built-in Cooktops

A range or built-in cooktop should have 15 inches of counter on one side, 9 inches on the other side, or 3 inches if enclosed by an end wall protected by a flame retardant surface. If an operable window must be behind a range, place it no closer than 3 inches behind and 24 inches above the cooking surface.

Built-in Ovens

A built-in oven should have 15 inches of counter no further than 48 inches away (if on an island counter). The counter must be adjacent to the appliance to meet universal design guidelines.

Microwaves

A microwave should have 15 inches of counter above, below or adjacent to it.

Refrigerators

A top or bottom freezer refrigerator should have 15 inches of counter on the latch side and be no further than 48 inches from counter. A side-by-side refrigerator should have 15 inches of counter on either side, and be no more than 48 inches

away from counter. Counter must be adjacent to the appliance to meet universal design guidelines.

Preparation work space should be 36 inches per person in most situations. For instance, for two people working simultaneously, two 36 inch work areas are needed, either side-by-side or in two separate areas of the kitchen. A 60 inch preparation center, if not at a corner, accommodates one full work space and standing room for a second person.

Whenever work centers are combined, the counter should be equal to the longer of the countertops being combined plus 12 inches.

Storage Space

Cabinets

Standard wall cabinets are 12 inches deep, and can range from 12 to 33 inches in height (30 inches is common). Base cabinets are typically 24 inches deep and 34½ inches in height (the counter on top brings the overall height to 36 inches). Both wall and base cabinets are available in widths from 9 to 60 inches.

The minimum total wall cabinet frontage recommended for a kitchen is 144 inches. For kitchens larger than 150 square feet, it is 186 inches. Wall cabinets installed 15 inches to 18 inches above countertop must be at least 12 inches deep and 30 inches high and have adjustable shelving to be included in the frontage calculation. At least 60 inches of wall cabinet frontage should be within 72 inches of the center front of the primary sink.

The minimum total base cabinet frontage recommended is 156 inches. For kitchens larger than 150 square feet it should be 192 inches. The standard depth of base cabinets is 24 inches, but base cabinet depths of 21 inches or more can be included in the frontage calculation.

Functional base corner storage, such as lazy susan or pie-cut cabinets, should be included if the kitchen has useable corner areas. Diagonal and pie-cut cabinets are equivalent to more storage than just their frontage measurement. For wall cabinets they equal a total of 24 inches each. For base cabinets they equal a total of 30 inches each. Full height cabinets, such as pantry cabinets, can be used to meet wall or base cabinet frontage recommendations. The chart below shows how to calculate the equivalent linear frontage of a full height cabinet to that of a wall or base cabinet.

Storage space should be arranged so that frequently used items are stored where they are first used and are easily accessible. For example the preparation center should store food staples used in preparation, mixing bowls and spoons, measuring equipment, and appliances such as the mixer. Include some of the following storage features to make the storage more accessible and the kitchen more functional:

- full extension drawers
- roll-out shelves
- interior vertical dividers
- built-in bins and racks
- swing-out pantries

Two 21 inch base cabinets each with three drawers or roll-out shelves would meet the minimum recommendation of 120 inches of drawer frontage. Separate waste receptacles for garbage and recyclables are needed.

Full Height Cabinet Depth	Calculate Equivalent to Wall Cabinet	Calculate Equivalent to Base
12"	2 x width of full height cabinet	1 x width of full height cabinet
18"	3 x width of full height cabinet	1½ x width of full height cabinet
21" to 24"	4 x width of full height cabinet	2 x width of full height cabinet

Clearance Space

Adequate clearance space is needed so that cabinets and appliances can be opened and are accessible for work. Crowded plans create unsafe conditions. Because of the countertop overhang, these clearance measurements are taken at the counter front, not the cabinet face. Kitchen professionals should make sure that your plan meets the industry space recommendations discussed below.

Doors should not be placed closer than 30 inches from the corner if cabinets are to be extended to the corner ***(H1)***.

Windows should not be placed closer than 12 $^3/_4$ inches from the corner if wall cabinets are to be extended to the corner ***(H1)***.

Clearance space between counter fronts above base cabinets should be at least 42 inches; for two persons the clearance should be 48 to 60 inches; for wheelchair users at least 60 inches is recommended for turning. Clearance space for walkway between the front of one counter and the side of another is 36 inches ***(H2)***.

Corner to corner clearance space between appliances or counters at right angles to each other is a minimum of 32 inches ***(H3)***.

Clearance must be provided for access to appliances and work spaces located at inside corners of cabinet units. Recommended standing room between a dishwasher and the corner is 21 inches and the minimum is 12 inches ***(H4)***.

A diagonal base cabinet of 20 inches requires 39 inches on either wall ***(H5)***. A diagonal cabinet or appliance of 30 inches requires 45 inches on either wall. A diagonal wall cabinet of 15 inches requires 24 inches on either wall.

Thirty-six inches on each side of the wall is needed for a lazy susan cabinet ***(H6)***.

Use a filler or extend the stile of the frame to insure full operation of cabinet or appliance drawers and doors in the following situations:

- appliance, such as a range, placed close to a cabinet intersection ***(H7)***
- cabinet is next to wall that is out of square
- cabinet is next to wall with door or window frame that interferes with drawers and pull-out shelves
- hardware interferes with operation of adjacent cabinets, appliances, or wall.

A built-in conventional oven should be placed so that the top side of the fully-opened door is between 1 inch and 7 inches below the user's elbow.

The microwave appliance should be on a level that is at least 3 inches below the user's shoulders. Elbow height plus or minus 6 inches is the most convenient height for the user. The microwave may be built into an oven or wall cabinet.

Vertical clearance space between the countertop and wall cabinet is typically 15 to 18 inches. The cabinet should be 24 to 30 inches above a sink and 27 to 30 inches above a range top. If the cabinet is fire protected it can be lowered to 24 inches over range.

Illustration H

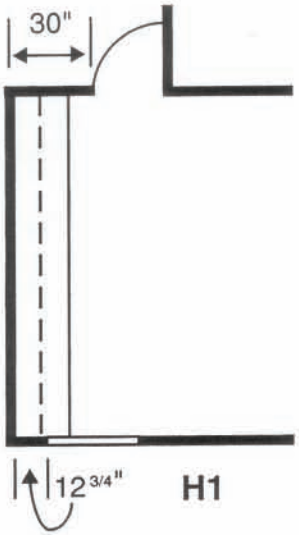

H1

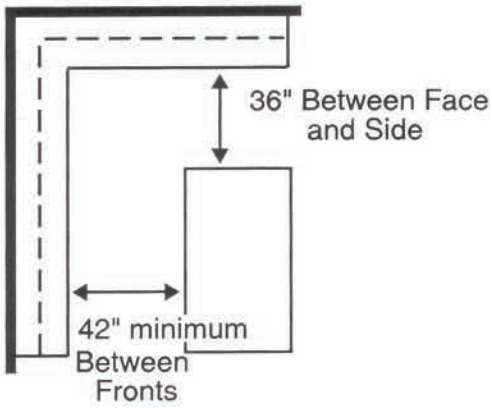

H2

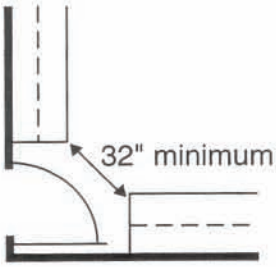

H3

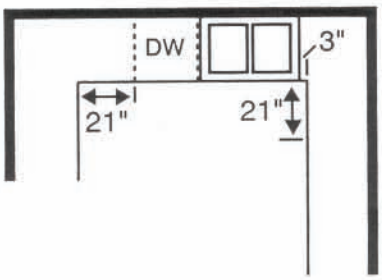

H4

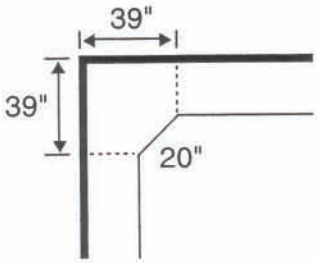

H5

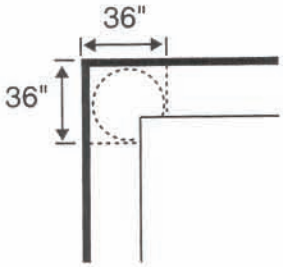

H6

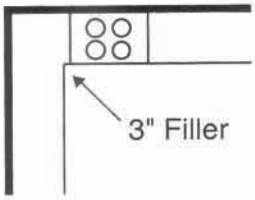

H7

Kitchen Design Checklist

___ 1. Walkway at least 32" at all entrances

___ 2. No doors interfere with work centers, appliances, or counters

___ 3. Work aisles at least 42" wide; passageways at least 36" wide for one cook; at least 48" wide for two cooks

___ 4. Wall cabinet frontage — kitchen under 150 sq. ft., at least 144"; kitchen over 150 sq. ft., at least 186"

___ 5. At least 60" wall cabinet frontage within 72" of primary sink centerline

___ 6. Base cabinet frontage — kitchen under 150 sq. ft. at least 156"; kitchen over 150 sq. ft., at least 192"

___ 7. Drawer frontage — kitchen under 150 sq. ft., at least 120"; kitchen over 150 sq. ft., at least 165"

___ 8. At least five storage items to improve accessibility and functionality

___ 9. At least one functional corner storage unit (if applicable)

___ 10. Between 15" to 18" clearance between countertop and bottom of wall cabinets

___ 11. Countertop frontage — kitchen under 150 sq. ft., at least 132"; kitchen over 150 sq. ft., at least 198"

___ 12. No two primary work centers are separated by full-height, full-depth tall tower

___ 13. At least 24" countertop frontage to one side of sink, 18" on other side; If there is a second sink. at least 3" counter space on one side and 18" on other side

___ 14. At least 3" counter space from edge of sink to inside corner of countertop or, at least 18" counter space from sink edge to inside comer of countertop if return counter space is blocked

___ 15. At least two waste receptacles are planned

___ 16. Edge of dishwasher positioned within 36" of edge of sink; at least 21" of standing room next to dishwasher

___ 17. At least 36" continuous countertop provided for preparation center

___ 18. At least 15" counter space on latch side of a refrigerator or on either side of side-by-side refrigerator, or at least 15" landing space which is no more than 48" across from refrigerator

___ 19. For open ended kitchen, at least 9" counter space on one side of cooking surface and 15" on the other; for enclosed configuration, at least 3" clearance at an end wall

___ 20. Cooking surface is not placed below an operable window unless window is 3" or more behind appliance and more than 24" above it

___ 21. At least 15" landing space next to or above oven if appliance door opens into primary traffic pattern; 15" landing space which is no more than 48" across from oven if appliance does not open into traffic area

___ 22. At least 15" landing space above, below, or adjacent to microwave oven

___ 23. Bottom of microwave is between counter and user eye level (36" to 54" off floor)

___ 24. All major appliances used for surface cooking have ventilation system with fan rated at 150 CFM minimum

___ 25. At least 24" clearance between cooking surface and a protected surface above or at least 30" clearance between cooking surface and an unprotected surface above; microwave hood combination appliance may be lower than 24" at back wall

___ 26. Work triangle totals 26′ or less

___ 27. No major traffic patterns cross through work triangle connecting primary centers

___ 28. Minimum 24" wide by 12" deep counter/table space for each seated diner

___ 29. At least 36" walkway space from counter/table to any wall or to obstacles behind it if area is used to pass behind seated diner; at least 24" space from counter/table to any wall or to obstacles behind it if area is not used as walk space

___ 30. Window/skylight area equals at least 10% of total sq. footage of separate kitchen, or of a total living space which includes kitchen

___ 31. Ground fault circuit interrupters specified on all receptacles within 6′ of water source; fire extinguisher located across from cooktop and smoke alarms included

Adapted from *Kitchen Industry Technical Manual*, Ellen M. Cheever, CKD, CBD, ASID

Use this page to draw your kitchen plan.

Scale: $^1/_4$"=1'

Aesthetic Considerations

Form And Function

In all choices, think about the function of an item and how well the form expresses the function. In a kitchen the textures are especially important. All materials should have surfaces that are easily cleaned. It is difficult to clean spills from rough textures on counters or floors. Select chairs and stools for comfort. Storage should be easy to use in relation to location, height, and appropriateness for items stored. Cabinets located above refrigerators and ranges and above and next to ovens will be warm storage areas. Cabinets installed on exterior walls will be cooler storage areas than those on interior walls. This should be considered when storing food supplies and dishware.

Accessories

Accessories in a kitchen contribute to its character and should be consistent with the overall feeling. These may be functional accessories such as canisters, utensils, wine racks, clocks, pottery, baskets, and serving pieces. They may be purely decorative such as plants, artwork, collections, or items related to hobbies and interests.

Color

Choosing the colors for a living space should be done with care and skill. Visualizing an entire room from a paint chip is difficult for the amateur. Color drastically affects appearance and mood of the area. It provides a point of reference for persons with impaired vision. There is no limitation and no perfect color. Pick colors you like. Colors change under natural and electric lighting and when seen in relation to other colors. Some colors, red, orange, and yellow, appear to be warm and are considered advancing and active colors. The cool colors, blue, green, and violet, appear to recede, feel more relaxing and make the area feel cooler. Increasing the amount of the color increases its impact.

Value, the lightness or darkness of a color, affects appearance and mood. Light colors generally make an area more spacious and can feel bright and cheerful, but without care they can be stark and cold. Dark colors make a space cozy, give a sense of solidity, but without care, can be depressing. Dark colors absorb more light and if mostly dark colors are used, increased lighting will be necessary.

Intensity, the brightness or dullness of a color, also affects appearance and mood. Very bright colors are stimulating, active, and advancing while grayed, dull colors seem subdued, quiet, and tend to recede.

Generally, cool, light, and dulled colors tend to make rooms look larger. Warm, dark and bright colors tend to make rooms look smaller. Rooms that appear too long can be visually shortened by adding a warmer, darker or brighter color at one end.

Selection of Equipment

Chart I lists the utility, installation, and space needs of kitchen equipment. New equipment should be purchased on the basis of usefulness and energy efficiency. New refrigerators, freezers, water heaters, clothes washers and dishwashers must meet national energy efficiency standards. Energy labeling can help you choose energy efficient models.

Appliances

Keep an old appliance if it still serves your needs and its appearance is satisfactory. Keep in mind that new appliances, especially refrigerators and dishwashers, use less energy. If the appearance is not satisfactory, some improvements can be made. Refrigerators, freezers, and dishwashers can be spray-painted with special appliance paints. Some appliances are designed so that front surfaces of plastic, wood, or metal can be installed to match the cabinets. A wood front for a dishwasher should have both sides and edges

finished with a moisture resistant sealer. There are businesses which can reapply porcelain to range surfaces.

Consider a new appliance if the old one is wearing out and requires repeated repairs or if it is important for the appliance to be the same depth as the cabinets. Free-standing ranges and refrigerators may extend beyond the 24 inch cabinet depth. However, built-in models are 24 inches deep. A new appliance may have different dimensions and installation requirements than the appliance you are replacing. For example, a common width for a drop-in or free-standing range is 30 inches but older models may be 40 inches wide. A professional-style appliance, such as a restaurant range, may require more clearance space, additional floor support, increased ventilation and, if gas, larger diameter supply lines. Vented ductwork is required for some ranges and built-in ovens. Refrigerators often require clearance space at the side(s) for full door opening(s) and at the top and sides for air circulation if the cooling coils are at the back. Installation requirements are listed on the appliance specification sheet.

Water Treatment

Whether your home is served by a private water supply such as a well or is connected to a municipal water supply, you may be considering installing a water treatment unit(s) or using bottled water. Depending on their size, treatment units may be installed in the kitchen at the point of use, in a utility closet, or in the basement.

Water softeners and iron filters are two types of water treatment units which treat some or all of the incoming household water supply, particularly the water for heating. Generally these are located outside of a kitchen. Drinking water systems may be installed under a kitchen sink or placed on the counter. These include activated carbon or charcoal filters; reverse osmosis systems; and distillation units. In planning a kitchen, consider where the unit will be installed for optimum use, the space required for the unit and its servicing, and plumbing installation requirements, including a water line to an automatic ice maker.

If a bottled water appliance is used, it should be placed close to where you will use it most often. Storage space for full and empty bottles needs to be accommodated. If the water appliance chills the drinking water, an electric outlet will need to be available.

Wiring

Wiring in a new or remodeled kitchen must meet the National Electric Code. It must be serviced by at least two 20 amp small appliance circuits (120 volts). Additionally, outlets within 6 feet of a sink must be protected by a ground fault interrupter (GFI). There should be at least one convenience outlet for each work surface wider than 12 inches. The outlets should be spaced every 48 inches along the wall so that outlets are no more than 24 inches apart.

An electric range at minimum requires a 40 amp circuit. A dishwasher and disposer can be wired to one 20 amp circuit. It is desirable to provide separate circuits (120 volts) for the refrigerator and for the freezer. If you use several portable cooking appliances at the same time, you may wish to install more than the minimum of two appliance circuits. Consider your needs for outlets for a phone, TV, radio, computer, cable or antennae.

Ventilation

Use kitchen ventilation to remove water vapor, grease, smoke and odors before they mix with the air in the rest of the house and the grease and smoke accumulate on surfaces. More cooking contaminants are released when grilling, frying or heating liquids in uncovered pans than when cooking at a simmering temperature in covered pans.

While operable windows currently satisfy the ventilation requirement of most state building codes, mechanical ventilation is considered more reliable and convenient. The American Society of Heating, Refrigeration and Air Conditioning Engineers (ASHRAE) recommends that a kitchen area be serviced by windows or by a kitchen exhaust system with a minimum air flow

capacity of 100 cubic feet per minute (CFM) or by a continuous low flow exhaust system of 25 CFM if part of a central house exhaust system. The kitchen industry recommends that all surface cooking units have a ventilation system with a fan rated at 150 CFM minimum or 50 CFM multiplied by the width of the hood. Over the grill range, an exhaust system with a higher airflow rate is needed. In general, the higher the flow rate, the better contaminants are captured. However, adequate outdoor air must be provided to insure proper operation of the exhaust system.

Both recirculating and exhaust systems are referred to as range ventilation systems. Recirculating systems do not remove water vapor or combustion gases and are less effective than exhaust systems in removing grease, smoke and odors. Recirculating systems are really filtration systems, not exhaust systems. In exhaust systems, air containing cooking contaminants is captured and exhausted outdoors.

Kitchen range ventilation systems are installed either as hoods located directly over the cooking surface or grill openings located at the cooking surface level. A hood that extends over most of the cooking area or a downdraft system will capture the contaminants from cooking. If large pots, such as for canning, are used extensively, select a hood or a downdraft with a raised vent. Factors affecting the choice of a kitchen range exhaust system are kitchen arrangement, sound level of the system, type of cooking, and the need for outdoor air to replace the air exhausted by the appliance. Check appropriate building codes for installation requirements of kitchen power exhaust fans, including range hoods, microwave hoods, and downdraft systems. Most state building codes include these requirements:

When a kitchen range hood faces a combustible material less than 30 inches above the cooking surface, the hood shall be separated from the combustible material by an appropriate thermal insulation.

Ducts passing through unheated spaces shall be insulated with a minimum of 1 inch of glass fiber insulation or equivalent.

Ducts located in a heated space shall be insulated with 1 inch of glass fiber insulation or equivalent for a distance of 3 feet from the duct outlet.

To prevent restriction of airflow, range exhaust systems should be installed using the shortest length of duct, the fewest elbows and the duct size recommended by the manufacturer. Install ducts with a good fit and seal to minimize air leakage (bypasses) at points where ducts penetrate walls and ceilings. Seal any openings in the walls or ceilings. In addition, the exterior wall cap should have an effective backdraft damper cap so that it will not flap or open when the exhaust system is off.

Fire Extinguisher

Locate a fire extinguisher in the kitchen near the doorway to the nearest exit. A 2 $\frac{1}{2}$ pound ABC dry chemical extinguisher is sufficient. A five pound unit would service the garage also.

Lighting

Efficient lighting systems provide necessary light by taking advantage of available daylight or using efficient electric light sources and fixtures that give the most light. To allow for daylight utilization, windows and skylights should equal 10 percent of the total square footage of the kitchen. If the kitchen is part of a larger living space, the windows and skylights can be located in the larger area, but then should equal 10 percent of the square footage of the total area.

The kitchen is an area in which visual tasks must be accomplished safely and accurately. Therefore use light colored surfaces because they reflect 80 to 90 percent of the light, while dark colored surfaces reflect less than 25 percent. Three times more wattage may be needed to adequately light an area with dark walls and cabinets than a room with light colors. The ceiling should be light colored to reflect light from indirect or hanging ceiling fixtures. The amount of light reflected from counters and floors also contributes to general lighting.

Lighting affects people, space, and the overall mood, as well as the appearance of colors and food. Incandescent, the common light bulb, is warm and flattering to skin tones, wood, and warm colors. Incandescent light tends to create shadows and highlights for accent which can be a problem for lighting tasks. To reduce energy consumption, lower wattage, energy-saving bulbs are available although light output (lumens) may be lower. A dimmer switch allows one to vary the light level and energy use.

Tungsten halogen bulbs, usually called halogen, are somewhat whiter than standard incandescent but basically warm in color. Initial cost is somewhat higher, but they are more energy efficient than standard incandescent bulbs. Halogen bulbs come in standard voltage and low-voltage. If they are low voltage (12 volts), a transformer is necessary. The low voltage bulbs are more efficient in terms of power usage, give off less heat, and have an extended bulb life. Low voltage halogen is costly but can provide an alternative to fluorescent for undercabinet lighting.

Fluorescent light provides three to four times as much light per watt of electrical energy as standard incandescent light. Fluorescent tubes are available in a variety of colors. Manufacturers have a 3000K series which combines good color with high efficiency. Warm or 3000K tubes blend well with incandescent and bring out warm colors. Cooler (3500K) tubes make cool colors more vibrant. Fluorescent light is available in linear, circular, and compact shapes. Most compact fluorescents blend well with incandescent lighting.

A total lighting plan includes general, task, mood, and accent lighting from either fixtures or built-in lighting. General and task lighting are essential. General lighting often comes from centrally located fixtures or indirect above-cabinet lighting. General lighting is usually not as effective in lighting the work surface or task, as the body frequently shields the light. It is wasteful to have general lighting at the level of illumination needed for specific work or task areas. Accent and mood lighting can be provided by separate fixtures or incorporated through general and task lighting.

The chart below shows task lighting needed at the preparation area, over the sink, and over the range. Either incandescent light sources or fluorescent sources can be used for task lighting.

A wall may be washed with light to accent the wall or to highlight artwork or collections. The space between fixtures should be the same as the distance from the wall to the fixture. To prevent glare and uneven light patterns on the wall, position the fixtures so the light strikes the wall at a 30° angle. The use of recessed directional or track fixtures with flood light bulbs and a 30 inch spacing is common. If the ceiling height is higher than eight feet, the fixtures should be moved further out from the wall and spaced accordingly. Track or recessed lighting can also be used to accent accessories with spot light bulbs, which give a more defined beam of light. Track lighting can be easily added to existing kitchens. However, there will be glare where the light bulb is visible and the fixture and track are grease collectors.

Work Centers	Location	Minimum Amount Needed
Preparation area	Under wall cabinets	Tubes long enough to extend 2/3 length of counter
Over the sink	In ceiling or soffit	One 30 watt fluorescent or one 75 watt incandescent
Over the range	In hood or under wall cabinets	One 20 watt fluorescent or one 60 watt incandescent
	In ceiling or soffit	One 30 watt fluorescent or one 75 watt incandescent

Codes for recessed lighting state that there must be sufficient space to dissipate heat in insulated ceilings. Fixtures with enlarged housings which meet the code are available or a box can be built to keep the insulation the necessary distance away from the fixture. Recommendations are 24 inches above and 3 inches around. Recessed lighting in the soffit rather than the ceiling is recommended in order to reduce penetrations of vapor retarders and air barriers and displacement of insulation for energy efficiency.

Built-in lighting (undercabinet, above cabinet, bracket, or soffit) is effective in kitchens for task lighting because the light prevents you from working in your shadow. Locate lighting so that you are not exposed to the glare of the bare tube or light bulb when standing or sitting. Built-in lighting needs to be a part of early planning, because it is usually permanently wired and switched. Four types of built-in lighting are shown in ***illustration I.***

Illustration I

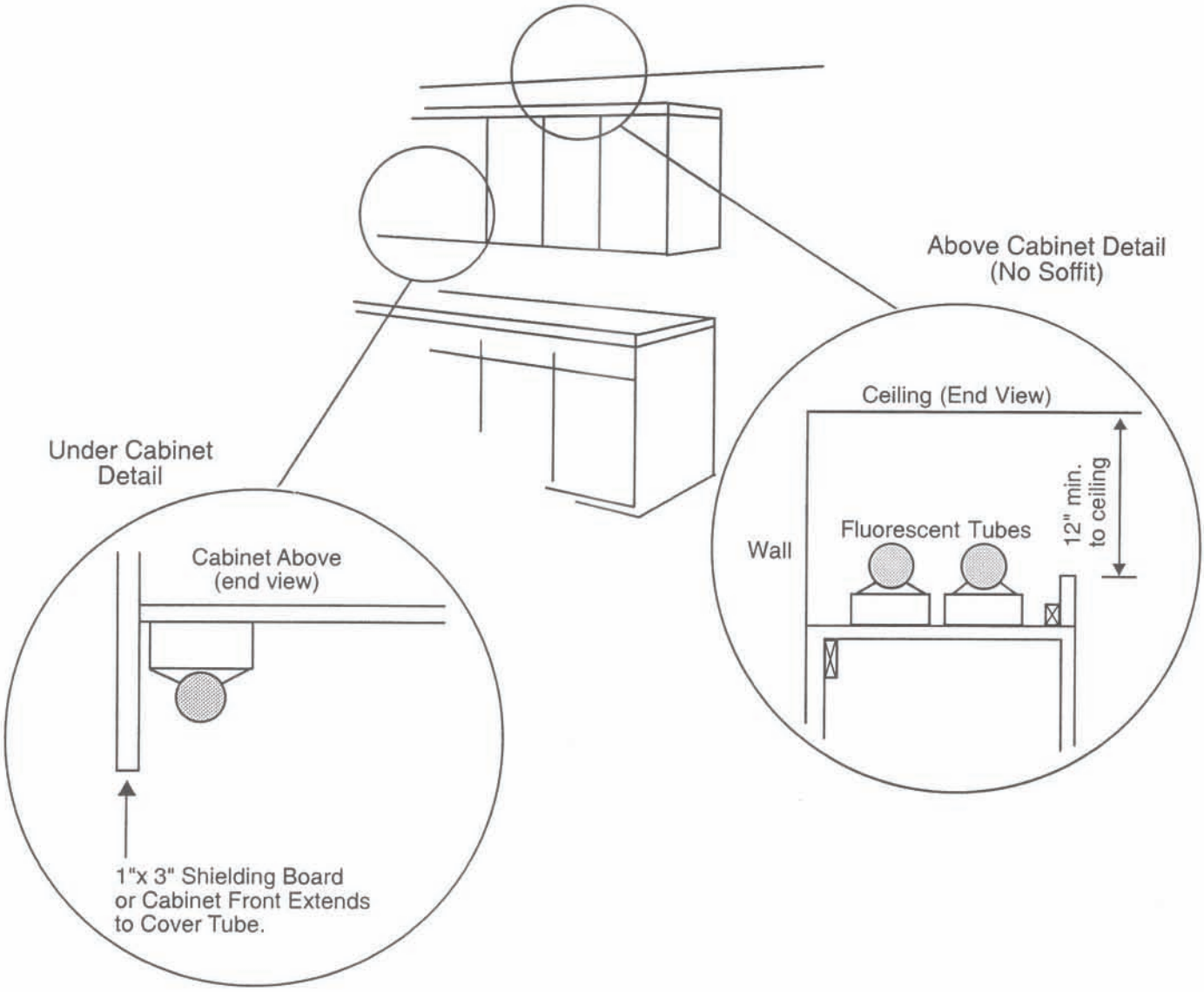

Illustration I

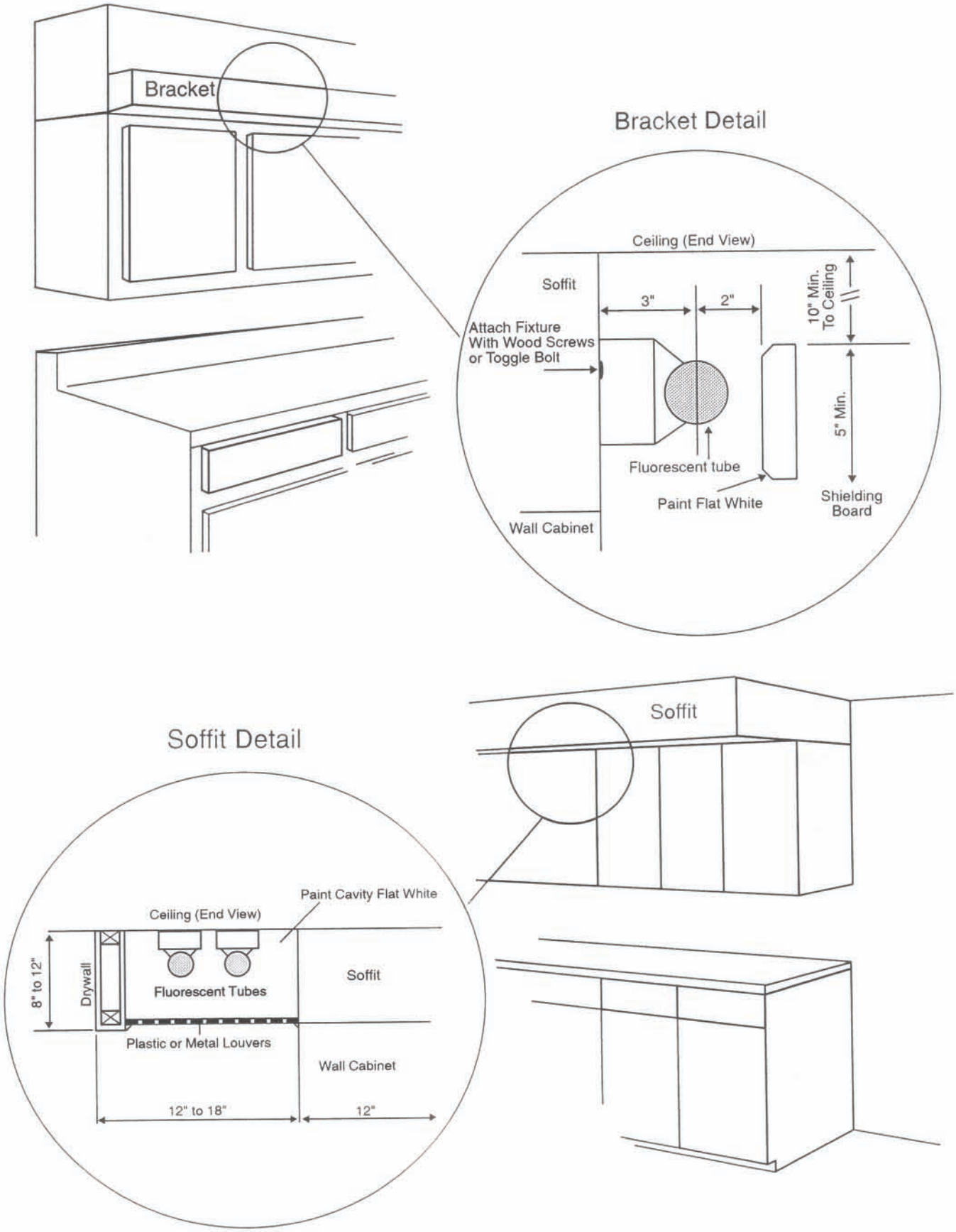

Undercabinet lighting:

Undercabinet lighting is very effective because the lighting source is close to the task. The fixture is placed under the cabinet at the front (preferably) or directly under the cabinet on the back wall. Shallow fixtures (only 1 inch to $1\frac{5}{8}$ inches deep) with diffusers are available for undercabinet lighting. Fluorescent and low voltage halogen fixtures are designed for undercabinet lighting.

Above cabinet lighting (without soffit):

This provides indirect general lighting. This is a good method for increasing the overall light level while eliminating glare. This is beneficial for everyone including the elderly.

Bracket lighting:

A minimum of 12 inches between the top of the shielding board and the ceiling is recommended. In this location the fixture should be mounted even with the top of the shielding board.

Soffit lighting:

The lighting is placed in the underside of a furred out area.

Selection of Furnishings

Cabinets

Cabinets are usually the most expensive item in the kitchen. Normally, kitchen storage is provided with cabinets having door fronts, but some people enjoy the convenience and appearance of open shelves and hanging storage. Open shelving alleviates the nuisance of opening and closing doors and is less expensive than cabinets with doors. It is a good choice for the well-organized and neat kitchen. Style and design are a personal choice, but should complement other selections in the kitchen and the entire house.

Be careful when selecting traditional cabinets. Generally these are adaptations of a particular style which take period motifs and apply them to contemporary cabinets. When selecting cabinets choose moldings that are well proportioned in relation to the cabinet doors. The lines and shapes should relate to each other and to the overall cabinet door front. There should be repetition of line, shape, and form to create unity. The hardware should relate to the cabinet door in form and style. Avoid the overly ornate. An excess of grooves can be a grease and dust catcher. A plate installed behind the door pull will protect the finish.

Cabinets, whether stock, semi-custom, or custom, vary in cost and quality. To judge the quality of cabinets the consumer must look at construction, interior and exterior finishes, special features, and how well they fit the kitchen. Cabinets manufactured in the United States, Canada, and Europe are available. Imported cabinets may be in stock, but special orders may take up to six months. Due to shipping costs, they tend to be more expensive than domestic cabinets of similar quality. Imported cabinets are sold in 10 centimeter modules rather than the standard 3 inch module of U.S.-made cabinets.

The influence of European imports has led to concealed hinges, which are not seen from the outside of the cabinet, and the elimination of the face frame of the box door and drawer. Frameless cabinets are widely available.

Some cabinet manufacturers are certified by the Kitchen Cabinet Manufacturers Association (KCMA) which means the cabinets have passed industry minimums related to performance and durability. Some cabinet dealers are members of the National Kitchen and Bath Association (NKBA), which sets standards for good business practices and quality work.

Judging Cabinet Quality

When judging cabinet quality you need to examine the cabinet box, drawers and shelving overall construction. ***Illustration J*** *shows several construction methods for joining drawers and boxes of cabinets.*

Illustration J

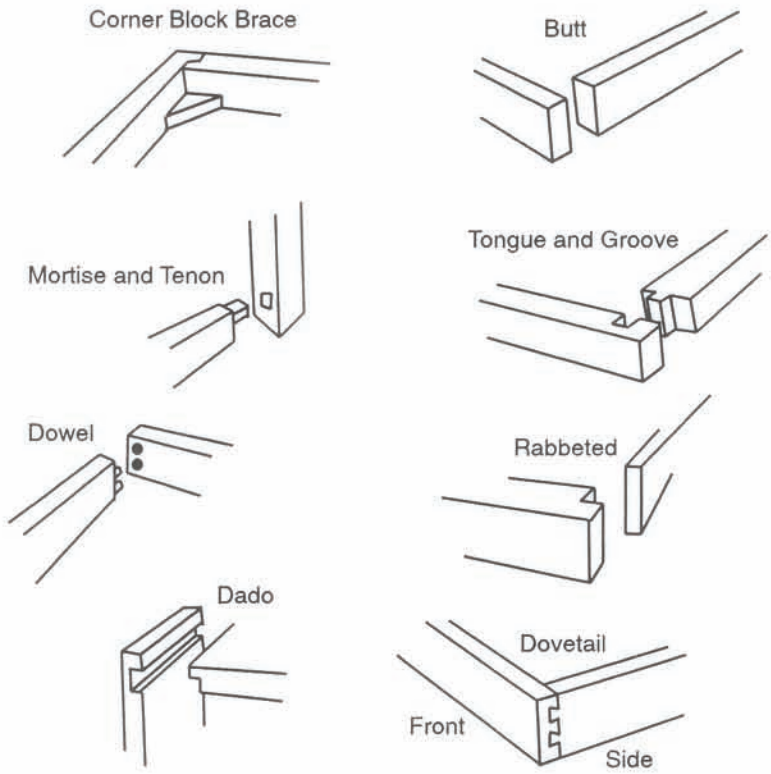

General Criteria:

- The box of the cabinet should look and feel sturdy. The drawer is a good indication of the quality of construction used in cabinets.
- Corner of wall and base should be braced with corner blocks.
- Where there is stress or a major joint, the stiles and rails (the vertical and horizontal framing) should be joined with mortise and tenon or dowel joints.
- Tops and bottoms should be dadoed into the sides.
- Hinges should be strong, swing freely, and operate silently.
- Hardware should be conveniently located and be comfortable to the hand, e.g. D- or U-shaped handle.
- In addition to quality, if undercabinet lighting is being considered, select wall cabinets with an apron or recessed lower shelf large enough to cover the light .
- Wood should be sanded smooth, with a richness and depth of tone.

Drawers:

- Drawers should be removable, have an automatic stop, and be of sturdy construction.

- The easiest sliding drawers have double metal tracking on sides or bottom of the drawer with nylon and ball-bearing rollers or aluminum glides with nylon rollers. Over time, drawers that slide directly on wood will not slide as well.

- The sturdiest drawers have dovetail or mortise and tenon joints in all four corners and have a separate drawer head attached to the drawer box which is made of $\frac{1}{2}$ inch thick wood for the sides and back and $\frac{1}{2}$ inch thick plywood or particle board bottom.

- Tongue and groove joints are sturdy; rabbeted and butt joints are the least sturdy.

- Plastic is easy to clean and can have molded plastic compartments which are useful. However, light-weight plastic can break if heavy objects are dropped on it.

Shelving:

- Cabinets wider than three feet should have a shelf support in the center.

- Wall cabinet shelves should be removable and adjustable, attached with clips or grooves.

- In base cabinets, pull-out shelves are more usable and convenient than stationary shelves and may be vertically adjustable.

- Open metal racks and shelving are available in base or wall cabinets and allow easy viewing.

- Roll-out or tilt-out bins are options to standard drawers.

- Lazy susans or blind corner swing-out shelves make corner space more accessible.

Finishes:

- There is a great range in the quality of finishes. Better, more durable finishes cost more.

- Some stock cabinets are available unfinished and are less expensive. Cabinet finishes which require long drying times are subject to dust, etc., in the air.

- Polyurethanes are the most common wood cabinet finish.

- Two additional finishes available today are polyester and lacquer. These have very high gloss. If scratched or marred, polyester is much more difficult to repair than lacquer.

Materials

Wood Wood is the most popular material for cabinets. It is available in softwood and hardwood. Softwood scratches and dents more easily. Wood grain of higher priced cabinets match vertically and horizontally. Plywood and particle board are more often used than solid wood for large areas since large wood pieces may warp. Exposed surface may be a veneer over plywood or particle board.

High pressure decorative laminates The $\frac{1}{32}$ inch thick decorative laminate, e.g. Formica[R], on a rigid material is highly suitable for kitchen cabinets. Decorative laminate cabinet doors need a backing sheet to prevent warping.

Plastics Polystyrene, a heavy, durable plastic is sometimes used to imitate wood. Rigid vinyls in sheet or roll, and low pressure decorative laminates are laminated to a substrate or corestock, i.e. particle board, but are not as durable as the high pressure decorative laminates.

Steel Steel cabinets are durable, washable, and retain no odor. They are available with laminated or wood fronts. Low quality steel cabinets are less expensive and may be noisy to use.

Installation

Cabinet installation requires skill. Cabinets must be installed level, plumb and true, or doors will hang crooked and not operate properly. Corners must be square. It may be necessary to sand or add shims between cabinet and walls or

floors. Check warranties carefully because do-it-yourself installations may void warranties. Exact measurements for cabinets should be taken after the dry wall is installed, or use the measurement from the stud wall and adjust for the thickness of the dry wall.

The space above the wall cabinets may be used for storage, indirect lighting, or closed with a soffit. It is also possible to extend the soffit to accommodate recessed soffit lighting. Closed soffit storage is available in custom cabinets and some special order cabinets. Open storage for serving pieces or accessories can be very attractive.

Remodeling

Check with a cabinet-maker or the manufacturer if you need to add to or replace existing cabinets. Sometimes old cabinets must be refinished to match new finishes. Cabinet refacing can be done in the entire kitchen or for part of the kitchen to match new cabinets. Sometimes only one set of cabinets (base or wall) need replacement. If cabinet structure is in good condition, you can just improve their storage efficiency by installing storage features.

Refinishing and Refacing Wood Cabinets

If the wood is in good condition, you may either sand and paint using a semi-gloss or gloss finish, or remove old finish, stain, and seal. If the doors are in poor condition, new standard size wood door and drawer fronts are available. Decorative laminate door and drawer fronts can be used over wood or old decorative laminate fronts. Wood can also be used for refacing.

Countertops

Countertops must be easily cleaned and able to withstand punishment from heat, stains, moisture, scratches, and cuts. To achieve a standard height of 36 inches, the countertop, including the subsurface, should be $1\frac{1}{2}$ inches thick. Remember, the light colors reflect more light which is important for a work surface. Dark colors show food spills more readily. A matte finish reduces glare and hides scratches. Textured rough surfaces or grooves and seams are hard to clean. Commonly used materials for countertops are decorative laminates, butcher block, ceramic tile, solid surfaces and stainless steel. Ceramic tile and solid surface require special consideration in selection of subsurface and cabinets. Stone, because of its weight, may require aditional floor support. (See ***Chart II*** for additional information on these materials.)

Materials

High Pressure Decorative Laminates

These laminates include Formica[R], Nevamar[R], Wilsonart[R], and Pionite[R] and are the most popular countertops. The surface may be glossy, matte, or textured. Available sizes are 26, 33, 48 and 60 inches wide and up to 144 inches long. For horizontal surfaces, laminates should be $\frac{1}{16}$ inch thick; $\frac{1}{32}$ inch thick is suitable for vertical surfaces. The laminate is adhered to a subsurface material such as particleboard or plywood to give it rigidity. The decorative laminate may be self-edged or post-formed ***(illustration K)***. There may be a dark line showing laminate thickness if countertop is self-edged.

Illustration K

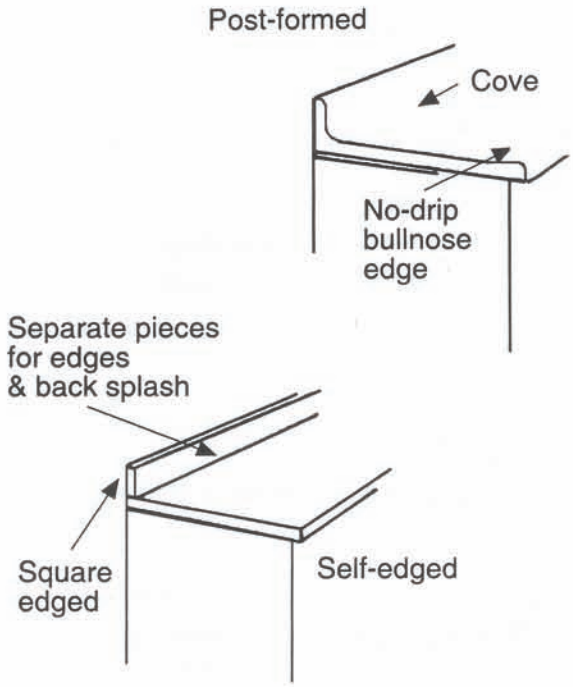

Butcher Block

Use a good grade of laminated, $1\frac{1}{2}$ inch thick maple which is well-sealed on all sides. After installation, treat with mineral oil which is non-toxic and will not turn rancid. Repeat this treatment periodically. Thoroughly clean and sanitize with bleach after contact with raw meats and poultry. Sealing and treating the wood is important because standing water will cause the wood to discolor.

Ceramic Tile

While ceramic tile is a hard surface, it may crack if heavy objects are dropped on it. Damaged tile can be replaced. Choose tiles with a glazed finish and use an epoxy grout to resist stains and moisture and a silicone sealer. Consider the availability of trim pieces such as no-drip edging and corner trim when selecting tile.

Stone

Granite or marble provide a natural, solid, impressive, and costly surface. These surfaces may stain and scratch but provide a very good surface for pastry or candy making. Marble is a porous material and will stain more readily than granite. Use a silicone sealer to protect these surfaces.

Solid Surface

These countertop materials include cast acrylic (Corian ®, Swanstone ®), polyester (Surell®, Avonite®), and a combination of both (Fountainhead ®, Gibraltar ®). They are available in a $\frac{1}{2}$ inch thickness and some come in thicknesses of $\frac{1}{8}$, $\frac{1}{4}$, $\frac{3}{8}$ and $\frac{3}{4}$ inch. Available widths are 25, 30, and 36 inches and lengths from 60 to 145 inches. Those that have single or double molded integral sinks are costly. Solid surface materials can be routed and sanded and seams are usually butted. Hardness and color choices differ among the products. Check manufacturer's specifications sheet to determine if two different colors can be butted together and how far the surface can overhang (cantilever) beyond the cabinet.

Combinations of Countertop Surfaces

More than one material may be used for countertops. For example, brushed stainless steel, stone, solid surface, or ceramic glass near the range or oven would be useful for hot pots and pans. For appearance, you may choose to edge a counter with some other material. Inserts or sections with a different countertop surface is a good alternative to replacing entire countertops.

Installations

Installing a countertop requires power tool skills for cutting. Decorative laminates are available as prelaminated stock slabs with mitred corners. Post-formed tops should be cut professionally. Solid surfaces are difficult to install and are usually professionally installed. They are costly, can chip or break, but are repairable. Solid surfaces and butcher block use butted corners. Ceramic tile chips more easily than the decorative laminates and if there are corners, directional patterns are a problem. Professional installation is recommended for stone.

Sinks

Sinks must be easy to clean and withstand scratching and chipping. Sink materials include stainless steel, porcelain enamel on cast iron or steel, and quartz resin. The lower the gauge number of stainless steel, the thicker and more durable it will be. Stainless steel with a high nickel content will be less likely to water spot. Porcelain enamel on cast iron is less likely to chip than enamel on steel. Quartz resin is a newer material and is available in a wide range of colors.

Sinks may be installed in several ways. They may overlap the countertop, have a separate rim, be flush-mounted, or under-mounted. Some solid surface countertop manufacturers offer countertops with integral sinks that are free of seams.

The number and size of sink bowls will depend upon the space availability and the needs of the household. Multiple bowls may be installed separately or as a one-piece unit. Select a sink based on work center needs, maintenance required, sound absorbing qualities, cost, and desired appearance.

Flooring

Many types of floor coverings can be used in kitchens (***Chart III***). Besides the obvious concerns of cleanability and durability, think

about how easy it will be on feet and legs, and how much sound it can absorb. The more resilient materials absorb more sound than hard materials. Rubber flooring is not suitable for use in kitchens because oils and grease cause deterioration. It is easier to wipe up spills on smoother surfaces. Middle value colors, color variation, and patterns do a better job of hiding soil.

Vinyl Composite Tile

This is a widely used product. The better quality products have color and patterns extending through the tile. Older installations of vinyl composite tile frequently contained asbestos. Check with health professionals before removal.

Vinyl Tile and Sheeting

Vinyls are very satisfactory in high traffic areas. Quality can be measured in part by thickness which ranges from $^1/_{16}$ to $^1/_4$ inch. The thicker gauge vinyls are more durable.

Rotogravure and inlaid vinyl are the two processes for creating the color and pattern on vinyl. In rotogravure, the colors and patterns are reproduced on the surface with a process much like printing and then protected with a vinyl coating. In inlaid vinyl, the color and pattern extend through the tile or sheet, which increases wearability.

Non-permanent no-wax finishes are available on many vinyls. To judge the quality, look at specification sheets or talk to a reputable dealer who has enough experience to judge the quality. A vinyl dressing is available to restore shine but won't last as long as the original no-wax shine. Vinyl cushioned with foam on the back and the no-wax finish add to the cost. Cushioned vinyl can be cut if a sharp object is dropped on it. Embossed patterns are more difficult to clean. Tiles are easier for do-it-yourself installation, and self-sticking ones are available. Sheet flooring is more difficult to install but easier to maintain since there are fewer seams to catch dirt and moisture.

Hard Tile Flooring

Hard tile flooring such as ceramic or quarry tile is very durable. While any tile can be used on walls, only certain tile can be used on floors. Tiles designed for floors are harder and more durable. Try to be conservative when choosing color or pattern in ceramic or other hard tiles because they are permanent and difficult to replace. Buy some extra tiles at the time of installation in case repairs are needed at a later date. To resist staining and moisture, select glazed tiles and use an epoxy grout, or use silicone sealer on other grouts and unglazed tiles. Due to weight, use slate and brick only over extremely sound sub-floors.

Kitchen Carpeting

Carpeting is not as long-lasting as smooth surface flooring nor as easy to clean and sanitize. It provides warmth, deadens noise and is easy to stand on. Select a low level, dense pile. Cut pile eliminates the problem of snagging. To hide soil, select soil hiding prints or tweeds. To avoid excessive wetting in case of spills or in cleaning, select a carpeting with a moisture barrier backing. Wall to wall carpeting can be laid with two-sided tape or adhesive, or stretched and tacked.

Wood and Parquet Flooring

Wood floors in kitchens require protection with a water repellent finish such as polyurethane, wood wax, or dressings. The beauty of wood lasts only as long as the finish that protects it. The coating must be repeated after wear. For easy care, there are wood floorings which have been impregnated with acrylic and floorings of wood veneer with vinyl overlays. Prefinished tiles and planks are easier for do-it-yourself installations. Some tiles are cushioned, and some are self-sticking.

Seamless Poured Acrylic Flooring

This is a hard and relatively permanent material. It is waterproof and requires neither waxing nor buffing. It needs a minimum of three top or surface coats and preferably more. High wear may mean adding surface coats to restore shine in five to seven years. Make sure it is guaranteed. It may be difficult to find an installer if you are not in a metropolitan area.

Subflooring

Thickness and type of subflooring depend upon the existing flooring materials, the weight and type of finished flooring and the threshold connections to adjacent rooms. Most floor materials can go over plywood or concrete. The only floorings that can go directly over the particle board subflooring are poured flooring, carpeting laid without adhesives, and some vinyls. For other floorings, plywood should be glued and nailed over the particle board before applying the new material. New flooring can go over existing flooring if it is smooth and level but wax must be removed if an adhesive is used. When installing flooring in a kitchen that is on or below grade where moisture may penetrate, you should check the manufacturer's specifications to determine if the flooring material is suitable.

Walls

Wall coverings in the kitchen should be scrubbable and smooth for easy cleaning. Paint is usually lowest in cost and easiest to install. Solid surface such as Corian^{R}, is high in cost and more difficult to install. If wall surfaces are in very poor condition, replace damaged wall with new materials such as dry-wall.

Paint

There are two basic types of paint: latex (water-based) and alkyd (oil based). Latex is easier to apply and to clean up. Oil base is more difficult to apply and odor may linger. You can use a gloss or semi-gloss paint although a gloss surface will show more imperfections. Medium to high gloss latex and oil based paint withstand scrubbing but may become duller with repeated scrubbing. Before repainting, wash walls with a solution of tri-sodium phosphate (T.S.P.) or all-purpose cleaner to remove grease and oil.

Wallpaper

Use vinyl wallpaper or a wallpaper with a vinyl coating. Highly reflective coverings will show water spots and will reveal flaws on a wall. A strippable covering is easier to take down in the future. Some wallpapers are prepasted. Wallpapers vary in color from run to run, so order enough rolls to complete the job.

When selecting wallpaper with patterns, look at the design carefully and evaluate the quality of the design. Avoid cliche patterns for kitchens such as pots or spice jars. There are many well-designed patterns on the market. The size of the pattern should relate to the size of the space. In small spaces select small patterns or no patterns, and minimize the amount of contrast. Larger spaces can handle more contrast, and larger, bolder patterns.

Wood

Wood planks and other types of wood used on floors can be used on walls. Planks can be used vertically, horizontally, or at an angle. Paneling is available in a wide choice of colors and in 4 x 8 foot sheets. Wood veneers on paneling are the most expensive type of paneling. Low-cost paneling is usually printed grain on a hardboard base. It chips easily in installation. All wood requires some upkeep. Rough or grained surfaces collect dirt and can be difficult to clean.

Laminates

If countertops are a decorative laminate, you may want a laminate between the wall cabinets and the backsplash. Laminates are available in a thinner $^{1}/_{32}$ inch gauge for vertical surfaces. They do not come longer than 12 feet and vary in width from 26 inches to 60 inches.

Solid Surface

Solid surface materials such as Corian^{R} are available in thicknesses less than $^{1}/_{2}$ inch for walls, 30 inches wide and up to 98 inch lengths. It may require special bracing and gluing. It will chip and break if not supported during installation.

Ceramic Tile

For easy installation, look for tiles on pre-patterned sheets. Buy extra tiles because some may break during installation or need to be replaced during the life of the tile. Colors may not match if more tiles are purchased later. To resist staining and moisture, select glazed tiles and use an epoxy grout, or use a silicone sealer on other grouts and unglazed tiles.

Ceilings

Ceilings are usually white or a very pale color since light values reflect light well and add spaciousness. Many of the same materials used on walls can be used on ceilings. Paint and wallpaper are the most common. There are many textured paints and some can be sprayed on drywall. However, textured ceilings are difficult to clean. When remodeling the kitchen in an older house with high ceilings, it may be desirable to lower the ceiling to change the room proportions, or to reduce the area to be heated. Ceiling tiles, acoustical and nonacoustical are another alternative. If sound absorbing qualities are desired get tiles that absorb about 50 to 75 percent of the sound waves that strike them. Acoustical tiles may be glued or stapled to the ceiling or suspended on a metal grid.

Windows

To increase the open feeling and the amount of natural light, consider installation of windows between countertop and wall cabinets by the backsplash or a skylight. A window located over a sink or base cabinet needs to be easy to open and close, such as a casement window. Good natural light can eliminate the need for lighting during the day.

A window designed to provide natural light may be a source of uncomfortable solar heat gain. South-facing windows should incorporate exterior shading or overhangs to prevent overheating in the summer. West windows may also be a problem in the summer. Even in winter, large windows may cause the kitchen to be warmer than adjacent living spaces on sunny days and cooler when the sun goes down.

Windows in kitchens should have a high R-value. This results in a warmer window pane and less condensation of moisture. When using and adjusting kitchen window treatments remember that blinds and shades have a tendency to reduce heat and air flow to the inside window surface, thus reducing the temperature of the glass. Because these coverings are not tightly sealed, moisture in the indoor air will move to the window surface and can result in condensation. To minimize the negative energy impact of skylights, choose a small skylight strategically placed with a high R-value and good shading.

Window Treatments

Choose window treatments that control light. The view may be desirable for enjoyment, to watch children, or may need to be blocked for privacy or an undesirable view. It is important to select a window treatment that is easy to clean. Near gas ranges, select a window treatment that cannot blow near the flame and become a fire hazard. Windows without a treatment can be interesting but there is no control of light, ventilation or view.

When the kitchen is part of another area of the house, it may be desirable to choose the same window treatment for both areas. The window treatment affects the overall character of the room by its color, texture, pattern, and whether the lines are dominantly vertical or horizontal. The window treatment can open horizontally or vertically. The many kinds of treatments include roller shades, bamboo or wood shades, blinds, shutters, curtains and draperies. Some of these will be much easier to clean than others. Consider the window hardware and placement so it will not interfere with the window treatment.

Chart I Utility and Space Needs of Kitchen Equipment

Equipment	Common Space Requirements in Inches			Electrical Need	Water, Gas, Ductwork and Chimney Needs
	Width	Depth	Height		
Sink **single bowl** **double bowl** **triple bowl**	21 - 25 33* - 36 40 - 48 Sink cabinet must be larger than the sink bowl i.e. a 33" sink requires a 36" cabinet.				Connect to hot and cold water supply. Must be connected to a main drain line and a vent.** If water is softened in the house, the cold tap in the kitchen is often left unsoftened.
Water treatment	varies countertop and undercabinet models are available			Varies. Many are non-electric. Most home distillation units have heating elements of 500-1500 watts and need access to a 120 volt circuit. Ultra-violet systems need access to a 120 volt circuit.	Some models require separate tap and access to drain pipe. Treated water should connect to water line servicing refrigerator.
Dishwasher	18, 24*	24	34½	One 20 amp circuit (120 volts), dishwasher and disposer may use same circuit. Dishwasher must be wired directly, if built-in.	Connect to ½" hot water supply line and to the drain line.**
Disposer	Sink bowl with a 3½" or 4" opening			One 15 amp circuit (120 volts). Disposer and dishwasher may use same 20 amp circuit. Continuous feed disposer must be wired to an on-off control; this switch should be at least 6 linear feet from the disposer opening.	Requires a cold water supply and must be directly connected to a sink base drain opening and drain line.**
Trash Compactor	12, 15*, 18	18-24	34½ (without top)	Wire direct or plug into 120 volt circuit.	

* Most common size

** Size of pipe determines maximum distance from trap to vent.

Chart I Utility and Space Needs of Kitchen Equipment (con't.)

Equipment	Common Space Requirements in Inches			Electrical Need	Water, Gas, Ductwork and Chimney Needs
	Width	Depth	Height		
Refrigerator and refrigerator-freezer	24, 30-36*, 48	24-34	54-70, 84	120 volt circuit	Ice maker and water dispenser features require a water line connection.
Freezer (upright)	24, 33-36	24-34	54-70, 73, 84	Separate 15 amp, 120 volt circuit; appliance should not be plugged into a circuit which could be overloaded	
Freezer (chest)	48-72	32	62 (lid open)		
Freestanding range	18, 20, 27	25, 27	35-36 (cooking surface)	Gas: 120 volt circuit Electric: 120/240 volt circuit; amperage will vary.	Gas supply if gas range
	30*, 36, 40		70-74 (top of eye level oven)		
Slide-in or drop-in range	30*, 36, 40	24 16-22	35-36 (Slide-in) 27-29 (Drop-in)	Gas: 120 volt circuit Electric: 120/240 volt circuit, amperage will vary.	Gas supply if gas range
Built-in ovens	22, 24, 27, 30 cabinet (cut-out is less)	24	30 Single (cut-out is less) 50-52 Double (cut-out is less)	Gas: 120 volt circuit Electric: 120/240 volt circuit	Gas supply if gas oven Some models require ducted vent
Microwave	May be countertop, built-in wall or microwave hood, or integrated into a range or oven. Requires space for venting of warm moist air; check specifications if installing a conventional oven.			120 volt circuit; a few combination ovens require a 120/240 circuit or a 120 volt circuit and a gas line	

* Most common size

Note: Ranges listed do not include professional style models.

Chart I Utility and Space Needs of Kitchen Equipment (con't.)

Equipment	Common Space Requirements in Inches			Electrical Need	Water, Gas, Ductwork and Chimney Needs
	Width	Depth	Height		
Built-in cooktops	12-48	16-22	2-5, 7-10, 15-23	Gas: 120 volt circuit Electric: 120/240 volt circuit	Gas supply if gas cooktop
Built-in grills not in cooktops	12-48	20-26	5-15	Electric: 240 volt circuit	Ducted ventilating system required
Wood stove	Check specifications. Generally required clearance spaces between stove and cabinet furniture is 12"-24" on fire side and 6"-10" on oven side; clearance space for back flue to back wall is 18" or less if combustible surface is protected; floor protection should extend 12" beyond sides and rear of range and 18" beyond front				stove pipe class A chimney Check manufacturer's specifications about air for proper combustion and to minimize negative pressure in other appliances. Check local building codes.
Ventilation System					
Wall mounted hood	3-6" wider than range top or cooktop; 18"-24" between bottom of hood and surface units or burners depending on depth of hood, and type			Wire directly to 120 volt circuit unless the system is part of range	Ducted ventilation system will require insulated duct work (usually through cabinets) through a wall or roof. Provision for makeup air for exhaust appliances may be needed.
Hood over pennisula or island	3-6" larger than range top				
Downdraft	Available as a feature of ranges and cooktops or as a separate appliance. Check specifications for model.				

Chart II Countertops

Material	Cost Range	Design	Durability	Cleanability	Resistance to Heat	Resistance to Stains	Resistance to Moisture	Resistance to Scratches and Cuts
High pressure decorative laminate	Low to Middle	Many colors, patterns and textures	Good, if damaged must be replaced	Good, rough textures present a problem	Good, hot pans can scorch	Good	Good	Good, knives will cut surface
Solid surface (cast acrylic/ polyester)	High	Elegant, some have limited color range	Excellent, can be sanded to remove scorch and scratch marks.	Excellent	Good	Excellent	Excellent	Good
Butcher block	Middle	Adds warmth	Good, shows wear. Can be sanded and resealed with mineral oil	Good, needs sanitizing after contact with raw meats and poultry. Needs periodic resealing	Good, will scorch	Poor, shows stains	Good if sealed. If not sealed, moisture causes warping, discoloration	Good, shows wear. Develops patina. Can be refinished easily
Ceramic tile	Middle to high	Widest choice of color and patterns	Excellent	Good, seal nonepoxy grout periodically with a silicone sealer. Grout indentations need periodic scrubbing	Excellent	Excellent, if glazed tile. Grout stains if not properly sealed.	Good	Good
Granite	Very high	Natural, elegant	Excellent	Excellent	Excellent	Good	Excellent	Good
Stainless steel	High	Commercial look	Excellent	Excellent	Excellent	Excellent	Excellent but may show water spots	Good, brushed surface helps camouflage scratches

Chart III Flooring

Material	Price Range	Sizes Available	Design	Durability	Maintenance	Ease on feet and sound absorption	Installation
Vinyl composite tile	Low to Middle	12" squares	Wide range of patterns, printed or embossed	Very good. Resists grease and moisture. Can be dented by furniture	Sweep, damp mop and periodically apply protective finish	Fair	
Vinyl tile and sheets	Middle	12" square tile, 6', 9', 12' and 15' width sheets	Wide range of patterns and colors	Very good. Resists grease, moisture, and denting	Sweep, damp mop and periodically apply protective finish	Good, softness varies with backing	Tile* Sheet** Large piece requires precise cutting
Ceramic tile	Middle to high. Product low but installation increases cost	½" to 12" squares, rectangles, hexagons, etc.	Wide range of patterns and colors	Excellent, depends on the body and hardness of glaze	Sweep, damp mop and occasionally scrub grout indentation. Unless epoxy grout is used, seal periodically with a silicone sealer	Poor	Tile mounted on mesh back or paper sheet.* Determining layout for patterns and spacing between tile**
Quarry tile, slate and brick	Middle to high	Variable	Limited range, more natural colors	Excellent	Sweep, damp mop Occasionally scrub grout indentations. Unless epoxy grout is used, seal periodically with a silicone sealer. Quarry tile also requires sealing	Poor	Determining layout and spacing requires skill**
Carpeting (nylon is most common)	Low to middle	12' widths	Soft and warm. Wide range of color and pattern	Good	Clean spills and stains immediately. Frying causes grease buildup which collects dirt. Mold or mildew may occur in damp areas.	Excellent	
Wood	Middle to high	6" , 9" and 12" squares; 3" x 6" and 3" x 9" pieces; and planks of various lengths and widths	Natural beauty, visually warm	Excellent if properly finished and sealed. Can be sanded and refinished if showing wear. Cannot take standing water or continuous dampening.	Clean spills and stains immediately. Must be sealed or waxed. Acrylic impregnated, wood with vinyl overlay, and wood with penetrating finish need minimum care.	Good	Prefinished tiles* Planks and other on-site installations**
Acrylic (Poured floor)	Middle to high, product low but installation increases cost.	Covers any size without seams.	Wide range of colors. Limited patterns	Excellent	Sweep and damp mop.	Fair	Requires professional installation. Takes time for layers to dry

* Requires some skill
** Requires skill and experience

Resources

Black and Decker Home Improvement Library. (1989). *Kitchen Remodeling.* Minnetonka, MN: Cy DeCosse, Inc. **Do-it-yourself techniques for kitchen remodeling.**

Conran, Terence. (1989). *Do-it-Yourself with Style: Original Designs for Kitchens and Dining Rooms.* New York: Simon and Shuster, Inc. **Design and building of a kitchen.**

General Electric Lighting. (1992). *Home Lighting Handbook.* Cleveland, OH: General Electric. **Concise guide for residential lighting recommendations.**

Julee Quarve-Peterson, Inc. (1989). *The Accessibility Book.* Crystal, MN. **Accessibility building codes and product directory.**

Mace, Ronald L. (1991). *The Accessibility Housing Design File: Barrier Free Environments.* New York: Van Nostrand Reinhold. **Design solutions using universal design.**

Midwest Plan Service. (1988). *House Planning Handbook.* 2nd ed. Ames, IA: Midwest Plan Service, Iowa State University. **Space requirements, vertical and horizontal dimensions for kitchen and room planning.**

National Kitchen and Bath Association and University of Illinois Small Homes Council. (1992). *Kitchen Industry Technical Manuals.* Champaign-Urbana: University of Illinois. **Six volumes covering building and kitchen materials, mechanical systems, equipment, design, planning guidelines, and drawing techniques.**

Raschko, Bettyann. (1991). *Housing Interiors for the Disabled and Elderly.* New York: Van Nostrand Reinhold. **Housing needs for special populations and solutions to accessibility problems.**

Small Homes Council-Builder Research Council. (1991). *Kitchen Planning Standards.* C5.32. Champaign-Urbana: University of Illinois. **Summary of basic planning guidelines.**

State and local building codes for your area.

Time-Life Books. (1977). *Kitchens and Bathrooms.* Alexandria, VA: Time- Life Books. **Do-it-yourself techniques for installation of kitchens and bathrooms.**

North Central Regional Extension Publications are subject to peer review and prepared as a part of the Cooperative Extension activities of the thirteen land-grant universities of the 12 North Central States, in cooperation with the Extension Service - U.S. Department of Agriculture, Washington, D.C. The following states cooperated in making this publication available:

University of Illinois
Ag. Publication Office
69 Mumford Hall
Urbana, IL 61801
(217) 333-2007

Iowa State University
Publications Distribution
Printing & Pub. Bldg.
Ames, IA 50011-3171
(515) 294-5247

Michigan State University
Bulletin Office
10B Ag. Hall
East Lansing, MI 48824-1039
(517) 355-0240

*University of Minnesota
Distribution Center
20 Coffey Hall, 1420 Eckles Ave.
St.Paul, MN 55108-6069
(612) 625-8173

Extension Publications
2800 Maguire
University of Missouri
Columbia, MO 65211-0001
(314) 882-2792

University of Nebraska
Dept. of Ag. Comm.
Lincoln, NE 68583-0918
(402) 472-3023

Ohio State University
Publications Office
385 Kottman Hall
2021 Coffey Rd.
Columbus, OH 43210-1044
(614) 292-1607

Cooperative Extension Publications
Rm. 245 30 N. Murray St.
University of Wisconsin
Madison, WI 53715-2609
(608) 262-3346

* Publishing State

For copies of this and other North Central Regional Extension Publications, write to: Publications Office, Cooperative Extension Service, in care of the University listed above for your state. If they do not have copies or your state is not listed above, contact the publishing state as marked with an asterisk.

Programs and activities of the Cooperative Extension Service are available to all potential clientele without regard to race, color, national origin, age, sex, religion or disability.

In cooperation with the North Central Region Educational Materials Project.

Issued in furtherance of Cooperative Extension work, Acts of Congress of May 8 and June 30, 1914, in cooperation with the U. S. Department of Agriculture and Cooperative Extension Services of Illinois, Indiana, Iowa, Kansas, Michigan, Minnesota, Missouri, Nebraska, North Dakota, Ohio, South Dakota, and Wisconsin. Patrick J. Borich, Dean and Director, Minnesota Extension Service, St. Paul, Minnesota 55108.

Copyright 1993 by Minnesota Extension Service, University of Minnesota.

Produced by the Educational Development System, Minnesota Extension Service.

Printed on recycled paper with not more than 10% postconsumer waste.

The information given in this publication is for educational purposes only. Reference to commercial products or trade names is made with the understanding that no discrimination is intended and no endorsement by the Minnesota Extension Service is implied.

BU-1392-S
Revised 1993

MINNESOTA EXTENSION SERVICE
UNIVERSITY OF MINNESOTA

ISBN 0-9623116-5-0
90000>
9 780962 311659