University of Nebraska - Lincoln
DigitalCommons@University of Nebraska - Lincoln

Historical Materials from University of Nebraska-Lincoln Extension

Extension

1981

EC81-760 How to Adjust Vertical Turbine Pumps for Maximum Efficiency

Thomas W. Dorn
University of Nebraska - Lincoln, tdorn1@unl.edu

Mark A. Schroeder
University of Nebraska - Lincoln

Paul E. Fischbach
University of Nebraska - Lincoln

Follow this and additional works at: https://digitalcommons.unl.edu/extensionhist

Part of the Agriculture Commons, and the Curriculum and Instruction Commons

Dorn, Thomas W.; Schroeder, Mark A.; and Fischbach, Paul E., "EC81-760 How to Adjust Vertical Turbine Pumps for Maximum Efficiency" (1981). *Historical Materials from University of Nebraska-Lincoln Extension*. 1936.
https://digitalcommons.unl.edu/extensionhist/1936

This Article is brought to you for free and open access by the Extension at DigitalCommons@University of Nebraska - Lincoln. It has been accepted for inclusion in Historical Materials from University of Nebraska-Lincoln Extension by an authorized administrator of DigitalCommons@University of Nebraska - Lincoln.

Nebraska Cooperative Extension Service EC 81-760

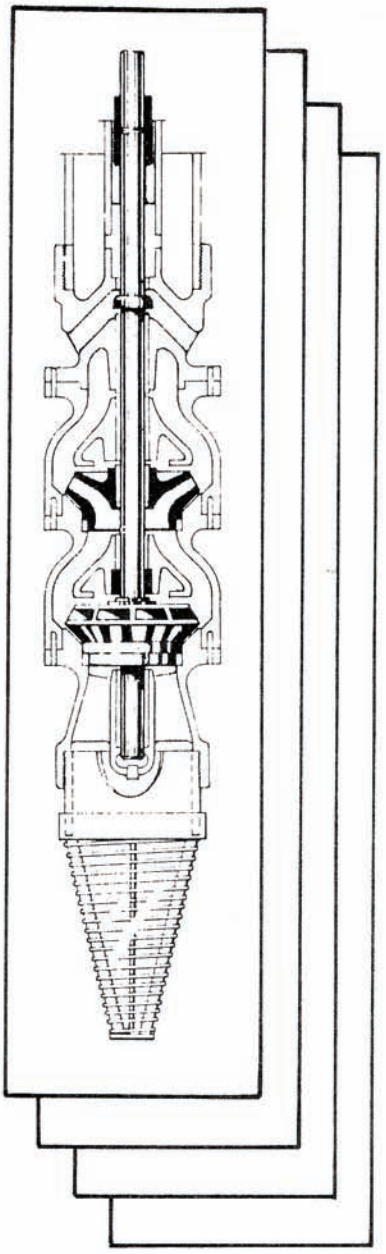

HOW TO ADJUST VERTICAL TURBINE PUMPS FOR MAXIMUM EFFICIENCY

Issued in furtherance of Cooperative Extension work, Acts of May 8 and June 30, 1914, in cooperation with the U.S. Department of Agriculture. Leo E. Lucas, Director of Cooperative Extension Service, University of Nebraska, Institute of Agriculture and Natural Resources.

HOW TO ADJUST VERTICAL TURBINE PUMPS FOR MAXIMUM EFFICIENCY

Thomas W. Dorn, Mark A. Schroeder, Paul E. Fischbach[1/]

The Agricultural Engineering Department has tested more than 500 pumping plants in the past 25 years. The average performance indicates that about 30 percent of the energy used for irrigation could be saved if all pumping plants operated at the Nebraska Performance Criteria (for a discussion of what the Criteria is and how it was derived see Extension Cricular EC 81-713, "It Pays to Test Your Irrigation Pumping Plant").

There were many causes for poor pumping plant performance. Major causes were poor power unit performance, and poor pump performance often caused by *improper pump adjustment*. This circular discusses proper pump adjustment to attain maximum efficiency.

Both semi-open and enclosed types of turbine pumps used in irrigation can benefit from proper impeller adjustment provided enough wear has occurred to allow water to leak past the pump seals and be recirculated within the pump bowl, and that there is enough seal area remaining in the bowl to reestablish a seal by lowering the impellers.

CONSTRUCTION OF LINE SHAFT TURBINE PUMPS

The turbine irrigation pump consists of an impeller enclosed within a bowl. When the impeller is rotated by application of torque to the line shaft, water is drawn through the eye of the impeller and accelerated along the impeller vanes imparting a velocity to the water. Upon leaving the impeller, the velocity is slowed dramatically, converting the velocity to head (pressure). Depending on the impeller design, each stage will create a certain amount of head on the water, with the total head simply a sum of the heads produced by the individual stages.

The line shaft extends from the bowl assembly to the top of the pump. It supplies torque to the impeller, provides support for the mechanical weight of the impeller, and supports the hydraulic downthrust acting upon the impeller.

[1/]Extension Irrigation Specialist, Northeast Station, Concord, NE, Extension Technologist, Extension Irrigation Specialist, Agricultural Engineering Department, University of Nebraska-Lincoln.

Hydraulic downthrust is the force caused by the pressure differential across the impellers and is proportional to the head produced by the pump. The magnitude of the downthrust produced per foot of head depends on the design criteria of the impeller and the impeller diameter.

Hydraulic upthrust is an upward force created in a vertical turbine pump by the change in the direction of flow of the water from vertical to horizontal as the water pumped flows through the impellers. The magnitude of the upthrust produced depends on the design criteria of the impeller and the volume of water pumped.

The resultant force acting on the impeller is due to the interaction between the downthrust and the upthrust forces. Since upthrust is greatest at maximum flow and downthrust increases proportionally with the head, most pumps will have a component of upthrust when first started but will operate with a net downthrust once some head is developed.

Figure 1 shows the forces causing upthrust and downthrust in the semi-open and the enclosed impellers.

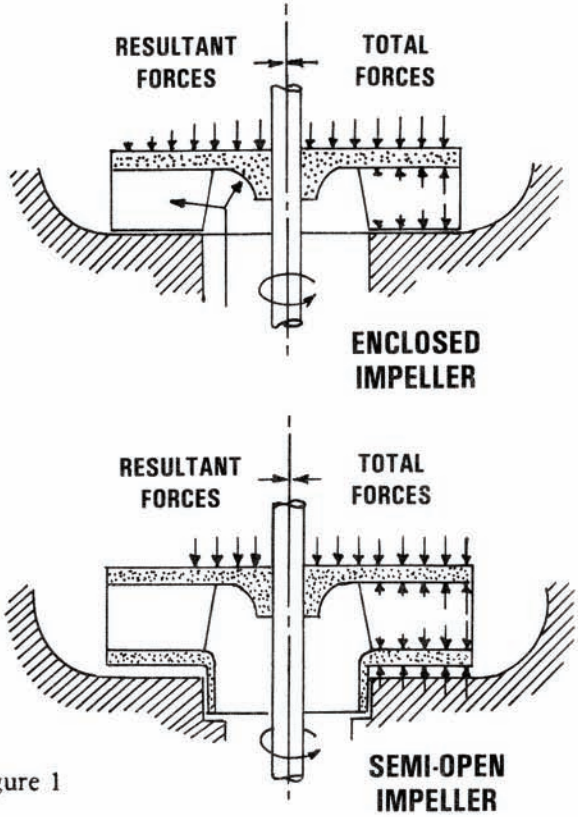

Figure 1

Vertical turbine pumps are designed to be easily multi-staged as illustrated in Figure 2. Given a pump shaft of the proper length, the impellers are placed into position in the bowl and locked in place by means of a collet having a self-locking taper. Bowls are placed above each impeller after it has been locked in place to the pump shaft. This operation continues until the required stages have been assembled.

The line shaft may either be enclosed in a tube and oil lubricated or exposed and water lubricated. The nut on the head shaft provides up and down adjustment for positioning the impellers within the bowls. Since the relative positioning between the impellers and bowls is the same on all stages, raising or lowering the lineshaft raises or lowers all impellers to the same positions within their respective bowls.

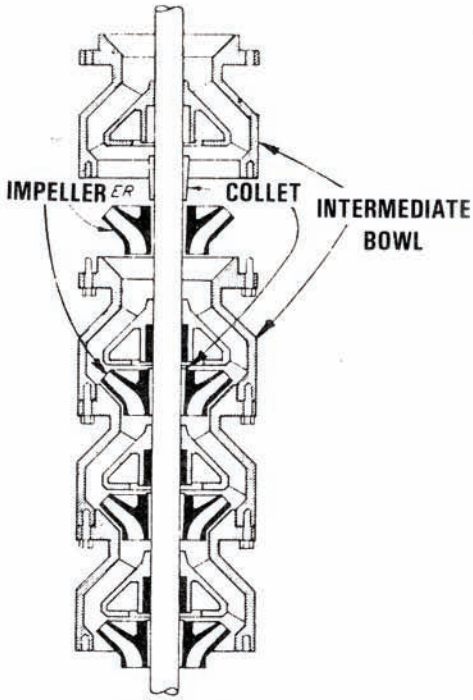

MULTISTAGE BOWL ASSEMBLY

Figure 2

Impellers are of two basic types: 1. The Semi-Open (Figure 3); 2. The Enclosed (Figure 4).

The semi-open impeller consists of vanes enclosed at the top only. If the unshrouded edges of the vanes are not in close approximation to the surface of the bowl, some of the water will merely be agitated by the impellers but not actually pumped out of the bowl. Excessive clearance reduces the

Figure 3

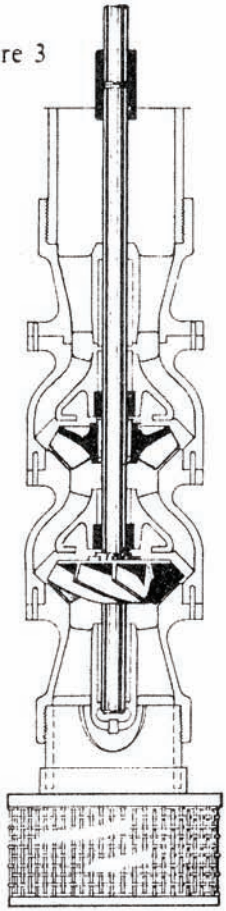

BOWL ASSEMBLY
WITH
SEMI-OPEN IMPELLERS
AND BASKET STRAINER
WATER LUBRICATED

Figure 4

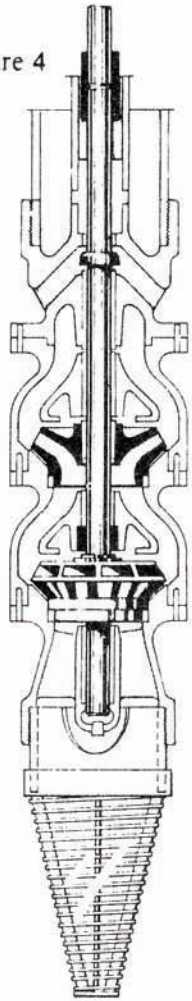

BOWL ASSEMBLY
WITH
ENCLOSED IMPELLERS
AND CONICAL STRAINER
OIL LUBRICATED

amount of water pumped and the ability of the pump to create pressure.

Water that is only agitated but not actually pumped causes a drag on the impeller—uses power doing nonproductive work. Therefore, the efficiency of the pump is reduced and the cost per unit volume of water delivered to the field is increased.

An enclosed impeller consists of vanes enclosed at top and bottom. Water enters through the bottom eye or neck of the impeller. Efficiency of the enclosed impeller depends on the seal which exists between the skirt of the impeller and the wear ring area of the bowl. There are three types of seals used on enclosed impellers. These are: 1. Side seal only (Figure 5); 2. Bottom seal only (Figure 6); 3. Combination side and bottom seal (Figure 7).

SIDE SEAL ONLY

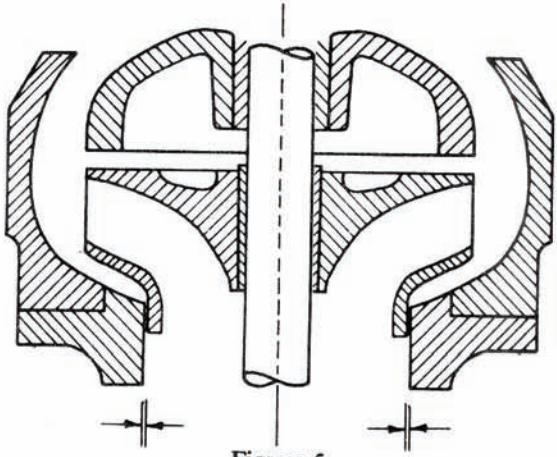

Figure 5

BOTTOM SEAL ONLY

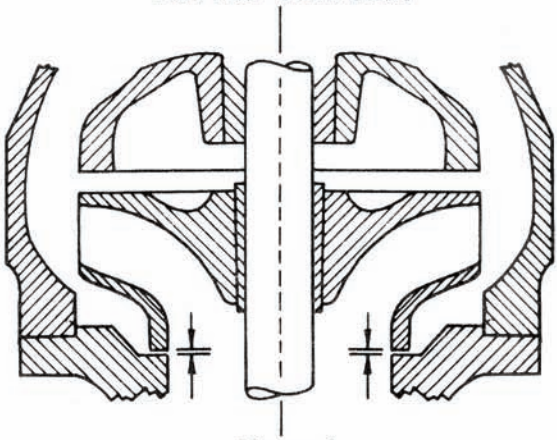

Figure 6

Figure 7 **COMBINATION SIDE & BOTTOM SEAL**

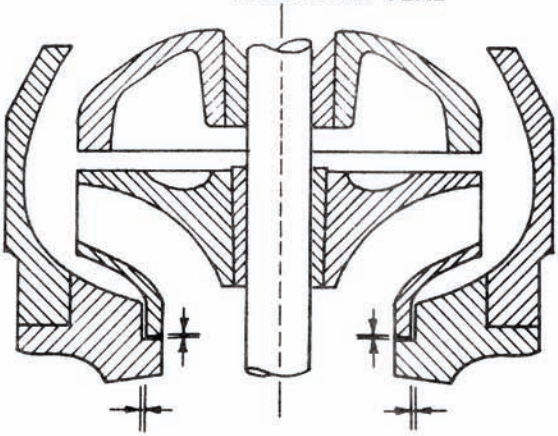

In the side seal only type, the seal is obtained by limited clearance between the skirt of the impeller and the matching vertical surface of the bowl. Adjustment will only be of benefit if the impeller is set initially very high until wear occurs to the top of the wear ring and the bottom of the impeller skirt. If this is the case, the impeller can then be lowered to reestablish a seal between the unworn surfaces. Usually only one new setting is possible on side seal only pumps (Figure 8).

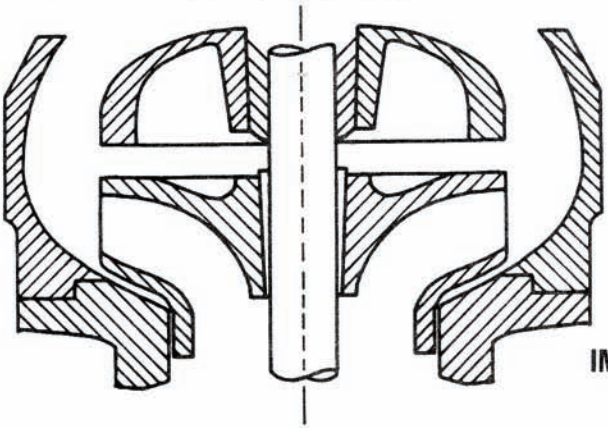

Figure 8

IMPELLER IN LOWEST POSITION

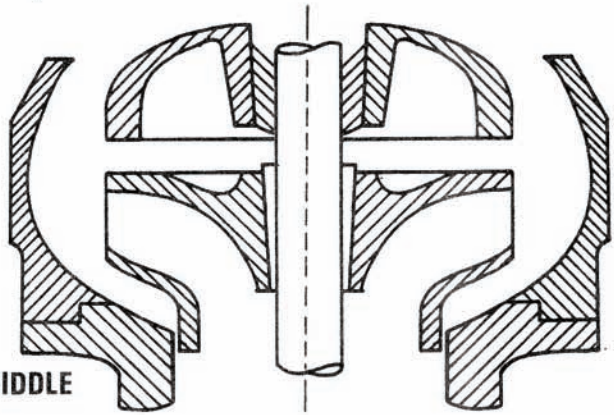

ADJUSTED IN THE MIDDLE

With a bottom or end seal type, vertical adjustment is always critical. Leakage is controlled by lowering the impeller so the bottom of the impeller skirt and the bottom of the wear ring form a seal (Figure 6).

Impellers with both side and bottom seals are, by far, the most widely used in irrigation. Vertical adjustment of the impeller does not affect leakage when the pump is new and the side seals are not worn. However, when the side seal becomes worn by abrasive materials (sand in the water), then the impeller performance can be improved by lowering the impeller to establish the bottom seal (Figure 7).

All types of impellers must be adjusted so that they do not drag, either on the top of the bowl at startup when the upthrust is greatest, or on the bottom of the bowl when under pressure and downthrust is acting on the impellers.

INFORMATION NEEDED TO CALCULATE ADJUSTMENT

The following steps are preliminary to calculating impeller adjustment:

1. Brand of pump; impeller and bowl model numbers. Either stamped on the discharge head or in the records received from the pump installer.
2. Remove the cover from the pump driver to expose the head shaft and adjustment nut. Then record the following information.
3. Measure the number of threads per inch on the head shaft.
4. Determine the shaft diameter, CAUTION! Sometimes the head-shaft is a different diameter than the lineshaft. (Check the shaft diameter between the discharge head and pump driver, if possible, otherwise check records received from pump installer.)
5. Determine the shaft length. This will be the column length plus the shaft through the pump driver and the pump bowls (Each bowl will add about one foot of shaft length).
6. Determine the total pumping head. Measure by checking:
   a. Lift (depth to water from pump discharge while pumping).
   b. Discharge pressure (from pressure gauge at pump discharge). (Convert to feet of head by multiplying pounds per square inch x 2.31)
   c. Add the lift to the pressure to get the total pumping head.
7. Determine downthrust in pounds per foot of head (Table 2).

Here is an example of a typical pumping situation:

1. Make **Peerless, Bowl 12 LB Impeller No. 2616011**
2. Threads per inch **10**
3. Shaft Diameter **1 3/16"**
4. Shaft Length **186 Feet**
   (180 ft of Column + 3 ft Head Shaft + 3 ft Pump Shaft = 186 ft)

5. Total Pumping Head
   a. Lift **160 ft** (Depth to water when pumping)
   b. Discharge pressure **17.3 PSI** (Read from gauge located at pump discharge)
   c. Convert PSI to Feet of Head **40 ft** (multiply PSI x 2.31)
   d. Add lift (ft) to discharge pressure (ft) to get total pumping head
      160 ft + 40 ft = **200 ft**
6. Determine downthrust factor **6.0 lb/foot of head (from Table 2).**

Calculate Total Shaft Stretch

Hydraulic downthrust is the load which causes the line shaft to stretch. Various diameter shafts differ in the amount they will stretch under the same load. This stretch must be known before you can make proper adjustments.

Hydraulic downthrust is calculated by multiplying the Total Pumping Head (Step 5 in example) by the Downthrust in pounds per foot of head (Step 6 in example from Table 2).

Total Pumping Head	200 ft
Downthrust	x **6.0** lb/ft of head
Hydraulic Downthrust	1200 lb

Table 1 indicates that a shaft 1 3/16 inches in diameter will stretch 0.045 inches for each 100 feet in length from a Hydraulic Downthrust of 1200 pounds. Since the shaft in the example is 186 feet in length, then 1.86 times the stretch per 100 feet will give total shaft strength.

EXAMPLE:

Line Shaft is 186 ft long	1.86 hundred ft
Stretch per 100 ft	x **0.045** inches/100 ft
Total shaft stretch	0.084 inches

Calculate Turns of Adjusting Nut

Multiply the total shaft stretch by the number of threads per inch to find the number of turns to raise the impellers.

Total shaft stretch	0.084 inches
Threads per inch	**10**
Turns of adjusting nut	0.84

Use the adjusting nut to help gauge fractions of a turn. If the nut is hexagonal (6 sided) each flat on the nut (from one corner to the next corner) will be 1/6 turn or 0.167 turn. To determine the fraction of a turn or the number of flats to turn the nut, divide the decimal turns of the adjusting nut by the decimal equivalent of the turns per flat.

In the example:

0.84 turns ÷ 0.167 turn/flat = 5 flats

Make Adjustment to Pump

1. Remove set screw or locking pin in adjusting nut. Check head shaft to determine if it has right or left hand threads. Lower impellers by loosening the adjusting nut on the top of the head shaft. Continue loosening the adjusting nut until the impellers rest on the bottom of the bowls. Shaft will not turn when impellers are resting on the bowls (if the shaft does not lower after the nut has been loosened, it may be necessary to hit the shaft on top. Use wooden block to avoid damage to the threads).
2. Raise impellers by tightening the adjusting nut until the shaft will just turn free by hand. Mark the position of adjusting nut at this point. Repeat the procedure several times to be sure of this position.
3. Tighten adjusting nut the amount calculated (in this example, 0.84 turn or just over 5 flats on the hexagonal adjusting nut). Tighten set screw or replace locking pin. If it is necessary to turn the nut to line up the hole for the locking pin be sure to *tighten* the nut (raise the impellers) to find the hole. Do not loosen the nut from the point calculated or the impellers will drag.
4. Rotate the impellers to make sure they are turning free before test running.
5. Replace the cover on the pump driver to reduce risk of injury.
6. Operate the pump. On units powered with internal combustion engines, start the pump slowly and increase speed gradually until desired speed and maximum pumping head are obtained. During this runup, listen and watch closely for unusual noises or vibrations. If they occur, shut down unit and recheck procedure for error. Observe pump operation until drawdown and discharge pressure are stabilized.

On electrically powered units a gradual speed increase cannot be obtained, but you can check the power requirement by means of an amp probe or by timing the watt-hour meter. By checking before and after adjustment you can determine if the power requirement has increased following adjustment. If there is more than a 10 percent increase in electrical input, the impellers may be dragging. If so, recheck procedure for error.

PUMP ADJUSTMENT WORKSHEET

Step 1: Pressure _____ PSI x 2.31 = _____ ft.
+ Pumping water level (lift) _____ ft = _____ ft
Total Head

Step 2: _____ ft Total Head x _____ lb/ft Downthrust
Value = _____ lb Hydraulic Downthrust (Table 2)

Step 3: _____ in/100 ft shaft stretch (Table 1)
x _____ ft shaft length ÷ 100 = _____ in total
shaft stretch

Step 4: _____ in total shaft stretch x _____ threads/inch =
_____ Turns of adjusting nut

Recheck Setting of Impellers on New Pumps

New pump installations are usually pumped 50 to 100 hours before final impeller adjustments are made. This allows the shaft couplings to tighten and most abrasives such as fine sands to be removed from the wells. On semi-open impellers and enclosed impellers with bottom seal only use the procedure described above to make the final adjustments.

New installations with side seal or combination side and bottom seal impellers should initially be set 1/4" to 3/8" higher than the calculations show, provided this does not cause the top of the impellers to rub on the bowls. This allows the impellers room for readjustment once the top half of the side seal becomes worn. Be sure that no loss of pressure or output has occurred after setting the impellers higher. If so, reset them as calculated. Side seal only, impellers will usually only benefit from readjustment one time, unless the impeller has an unusually long skirt area. Combination side and bottom seal impellers can be reset first to reestablish side seal then to establish bottom seal as many times as the impeller and bowl configurations allow.

Frequency of Adjustment

On new pumping installations, make preliminary adjustments when the pump is installed. Recheck the adjustment after 50 to 100 hours.

On older installations, adjusting may help return the pump to nearly new specifications of head-capacity and efficiency provided the impeller vanes have not worn to the point the curvature of the vanes or diameter have been

changed significantly. The frequency of adjustment of older pumps will depend upon the amount of abrasive material being carried in the water. Some pumps in Nebraska operating in sand-free water have retained their original efficiency after 10,000 hours of pumping.

Warning! The shaft stretch (and therefore the clearance required) increases if the pump is operated at higher head (pressure) conditions than those for which it has been set. Therefore, if for some reason major increases in head are planned, new adjustments must be made to the pump before increasing the head or damage to the pump could occur.

Table 1. Shaft elongation in inches per 100 feet of shaft.[a/]

Hydraulic thrust in pounds	Shaft-diameter in inches						
	3/4"	1"	1 3/16"	1 1/4"	1 7/16"	1 1/2"	1 11/16"
500	.047	.026	.019	.017	.013	.012	.009
600	.056	.032	.022	.020	.015	.014	.011
800	.075	.042	.030	.027	.020	.019	.015
1000	.094	.053	.037	.034	.025	.023	.018
1200	.112	.063	.045	.040	.031	.028	.022
1400	.131	.074	.052	.047	.036	.033	.026
1600	.150	.084	.060	.054	.041	.037	.030
1800	.169	.095	.067	.061	.046	.042	.033
2000	.187	.105	.075	.067	.051	.047	.037
2400	.225	.126	.090	.081	.061	.056	.044
2800	.262	.147	.105	.094	.071	.066	.052
3200		.169	.120	.108	.082	.085	.059
3600		.190	.134	.121	.092	.084	.067
4000		.211	.149	.135	.102	.094	.074
4400		.232	.164	.148	.112	.103	.081
4800		.253	.179	.162	.122	.112	.089
5200		.274	.194	.175	.133	.122	.096
5600			.209	.189	.143	.131	.104
6000			.224	.202	.153	.140	.111
6500			.243	.219	.166	.152	.120
7000			.261	.236	.178	.164	.129
7500				.253	.191	.176	.139
8000				.270	.204	.178	.148
9000				.303	.229	.221	.166
10000					.255	.234	.185
12000					.306	.281	.222
13000							.240
14000							.259
15000							.277

[a/] Based on modules of elasticity of 30×10^6 PSI for steel.

Table 2. Hydraulic downthrust values.

Bowl No.	Down-thrust**	Impeller type/seal*
A & C Pump[1]		
7 HC	.50	E S
8 HC	.63	E S
10 HC	.93	E S
10 HCB	12.6	E S
12 HC	12.0	E S
12 HCB	16.0	E S
14 HC	19.6	E S
Berkeley[2]		
803,L,LL,M,H	3.64	E SB
804,L,M,	3.64	E SB
804 H	4.93	E SB
805-M,H	7.52	E SB
1001 LL	2.08	E SB
1001-L,M,H	4.06	E SB
1002 M	6.13	E SB
1003 LL	3.38	E SB
1003-L,LM,ML,M,H	9.50	E SB
1004 M,H	9.92	E SB
1202-L,M,H	8.98	E SB
1203-L	8.98	E SB
1203-M,H	13.0	E SB
1203-HH	15.48	E SB
1204-M	14.13	E SB
1205-H	14.13	E SB
1403-L	15.48	E SB
1403-M,H,HH	19.10	E SB
1404-H	19.10	E SB
1603-L,H	27.78	E SB
8 K3L	5.28	O B
8 K4M	5.36	O B
8 K4H	5.50	O B
8 K4HH	5.59	O B
8 K5M	5.65	O B
8 K5H	5.89	O B
10 K1M	9.40	O B
10 K1H	8.70	O B
10K2M	9.08	O B
10K2H	9.18	O B
10K3M	9.95	O B
10K3MH	10.4	O B
10K3H	10.6	O B
10K4H	10.2	O B
12 K2L,M	12.7	O B
12 K2H	13.3	O B
12 K3M	12.5	O B
12 K3H	12.2	O B
12 K4M	14.3	O B
Berkeley[2] (Cont.)		
12 K5H	14.4	O B
14 K3M	17.0	O B
14 K3H	17.9	O B
14 K3HH	18.1	O B
Byron Jackson[3]		
6 MQH	0.8	E S
6 HQH	1.2	E S
7 MQL	3.2	E S
7 MQH	2.5	E S
8 MQL	3.3	E S
8 MQH	4.0	E S
8 MH	3.6	E S
10 MQL	4.7	E S
10 MQH	3.3	E S
10 HQL	6.3	E S
10 HQH	5.3	E S
11 MQL	7.1	E S
11 MQH	8.9	E S
12 MQL	6.9	E S
12 HQRL	5.2	E S
12 HQRH	7.2	E S
13 MQH	7.5	E S
15 MQL	9.3	E S
15 MQH	11.7	E S
17 MQL	16.4	E S
8 GL	5.7	O B
8 GM	5.0	O B
8 GH	5.6	O B
10 GL	7.0	O B
10 GM	8.1	O B
10 GH	7.1	O B
12 GL	14.3	O B
12 GM	11.1	O B
12 GH	9.2	O B
14 GM	21.4	O B
14 GH	15.7	O B
16 GL	20.6	O B
16 GM	18.7	O B
16 GH	18.4	O B
Fairbanks-Morse[4a]		
8 HC 6920-7020	6.0	E S
10 MC 6920-7020	7.0	E S
10 XHC 6920-7020	7.5	E S
12 MC 6920-7020	10.5	E S
12 HC 6920-7020	13.0	E S

*Impeller
Type: E - enclosed impeller, O - semi-open impeller
Seal: B - bottom seal only, SB - side and bottom seal, S - side seal only
**Pounds per ft of head

Bowl No.	Down-thrust**	Impeller type/seal	
Fairbanks-Morse[4a] (Cont.)			
12 XHC 6920-7020	12.0	E	S
14 MC 6920-7020	14.0	E	S
14 HC 6920-7020	18.5	E	S
14 XHC 6920-7020	20.0	E	S
16 MC 6920-7020	19.0	E	S
8 XLC 6970-7070	5.0	O	B
8 LC 6970-7070	6.0	O	B
8 MC 6970-7070	6.7	O	B
8 HC 6970-7070	7.2	O	B
10 XLC 6970-7070	8.2	O	B
10 LC 6970-7070	9.0	O	B
10 MC 6970-7070	9.3	O	B
10 HC 6970-7070	10.6	O	B
12 LC 6970-7070	13.2	O	B
12 MC 6970-7070	13.4	O	B
12 HC 6970-7070	15.5	O	B
14 LC 6970-7070	17.6	O	B
14 MC 6970-7070	18.5	O	B
14 HC 6970-7070	21.5	O	B
Fairbanks-Morse[4]			
6 M 7000	2.5	E	S
7 M 7000	3.5	E	S
8 M 7000	4.2	E	S
10 M 7000	6.6	E	S
10 XH 7000	7.5	E	S
11 M 7000	9.0	E	S
11 H 7000	15.0	E	S
12 M 7000	11.2	E	S
13 H 7000	19.1	E	S
14 M 7000	14.8	E	S
15 H 7000	25.4	E	S
12 H 7000	9.0	E	S
12 L 7000	9.1	E	S
12 MC 7000	8.0	E	S
12 XH 7000	12.0	E	S
14 MC 7000	10.1	E	S
14 XH 7000	20.0	E	S
10 XH 6920	7.5	E	S
12 MC 6920	10.5	E	S
12 XH 6920	12.0	E	S
14 MC 6920	14.0	E	S
14 XH 6920	20.0	E	S
16 H 6920	17.0	E	S
16 XH 6920	27.0	E	S
18 M 6920	18.0	E	S
18 H 6920	23.0	E	S
18 XH 6920	33.0	E	S
Floway[5]			
4 HOLL	1.6	O	B

Bowl No.	Down-thrust**	Impeller type/seal	
Floway[5] (Cont.)			
4 HOL	2.4	O	B
4 HOH	2.2	O	B
6 JOL	3.5	O	B
6 JOLL	3.6	O	B
6 JOH	3.5	O	B
8 JOL	4.4	O	B
8 JOH	5.5	O	B
10 DOL,M,H	10.4	O	B
12 DOL,M,H	15.0	O	B
14 DOL	20.3	O	B
14 DOH	20.3	O	B
6 LKM	2.1	E	SB
6 JKL,M,H	3.6	E	SB
8 LKL,M	4.2	E	SB
8 JKL,M,H	4.7	E	SB
8 HKH	6.9	E	SB
10 LKM	5.2	E	SB
10 DKL,M,H	8.3	E	SB
10 HKH	8.7	E	SB
10 FKH	13.3	E	SB
12 LKL	8.0	E	SB
12 LKM	8.4	E	SB
12 LKH	6.0	E	SB
12 DKL,M,H	12.0	E	SB
12 FKL	15.5	E	SB
12 FKH	13.5	E	SB
14 LKL	12.5	E	SB
14 LKM	12.5	E	SB
14 DKL,M,H	16.5	E	SB
14 FKH	11.5	E	SB
16 MKL	20.0	E	SB
16 MKM	20.0	E	SB
Goulds[6]			
6 JLO,JHO	2.4	O	B
6 DHL,DHH,DWT	5.6	O	B
8 JLO,JHO	5.3	O	B
8 DHLO	9.9	O	B
8 DHH,DWT	9.9	O	B
10 JLO,JMO,JHO	9.5	O	B
10 DHL,DHH,DWT	15.5	O	B
12 JLO,JMO,JHO	13.7	O	B
12 DHL,DHH,DWT	23.0	O	B
14 JLO,JMO,JHO	21.6	O	B
14 HMO	24.0	O	B
14 DHL,DHH	31.5	O	B
16 DHLO	42.0	O	B
6 JLC,JHC	1.8	E	SB
8 JLC,JHC	4.0	E	SB
10 JLC,JMC,JHC	7.0	E	SB
10 DHHC	12.4	E	SB
10 LHC	14.0	E	SB

**Pounds per ft of head

Bowl No.	Down-thrust**	Impeller type/seal	
Goulds[6] (Cont.)			
12 JLC,JMC,JHC	10.0	E	SB
14 JLC,JMC,JHC	14.9	E	SB
14 HMC	16.5	E	SB
16 DHLC	31.0	E	SB
Hydro[7]			
10 CL,CM,CH	8.3	E	S
12 CL,CM,CH	7.5	E	S
14 CM	22.0	E	S
8 LC	2.9	E	S
8 KC	3.9	E	S
8 MC	5.1	E	S
8 HC	5.4	E	S
10 LC,MC,HC	6.6	E	S
10 WC,YC	10.3	E	S
10 ZC	13.6	E	S
12 LC,MC	10.6	E	S
12 HC	16.5	E	S
12 XC	18.2	E	S
14 LC	17.2	E	S
14 MC	21.2	E	S
14 HC	21.8	E	S
8 LS	3.3	O	B
8 KS	4.4	O	B
8 MS	4.3	O	B
8 HS	5.4	O	B
10 LS,MS	7.5	O	B
10 HS	9.2	O	B
10 WS	11.2	O	B
10 YS	11.4	O	B
10 ZS	13.5	O	B
12 LS,MS	12.5	O	B
12 HS	19.0	O	B
14 LS	19.7	O	B
14 MS	23.4	O	B
14 HS	23.2	O	B
Jacuzzi[8]			
6 JC,LC	1.6	E	S
6 MC,HC	2.2	E	S
6 XC	2.8	E	S
6 WC,YC	4.1	E	S
8 JC,LC	3.0	E	S
8 KC,MC	3.9	E	S
8 HC	5.4	E	S
10 LC,MC	6.6	E	S
10 HC	8.1	E	S
10 WC,YC	10.3	E	S
10 ZC	13.7	E	S
12 LC,MC	10.6	E	S
12 HC	16.5	E	S
12 XC	18.0	E	S
14 LC	17.2	E	S

Bowl No.	Down-thrust**	Impeller type/seal	
Jacuzzi[8] (Cont.)			
14 MC,HC,XC	21.8	E	S
14 WC	24.8	E	S
16 MC,HC	34.9	E	S
20 MC,HC	38.0	E	S
24 HC	59.0	E	S
28 HC	83.0	E	S
M 4	1.5	O	B
H 4	1.5	O	B
6 JS,LS	1.7	O	B
6 MS,HS,XS	2.4	O	B
6 WS,YS	4.2	O	B
8 JS	3.5	O	B
8 LS	3.3	O	B
8 KS,MS	4.4	O	B
8 HS	5.4	O	B
10 LS,MS	7.5	O	B
10 HS	9.2	O	B
10 WS	11.2	O	B
10 YS	11.4	O	B
10 ZS	13.5	O	B
12 LS,MS	12.5	O	B
12 HS	19.0	O	B
12 XS	19.6	O	B
14 LS	19.7	O	B
14 MS	23.4	O	B
14 HS	25.2	O	B
14 XS	23.4	O	B
14 WS	26.2	O	B
16 MS	38.9	O	B
16 HS	39.5	O	B
Johnston[9]			
6 AXS,ASII	2.0	O	B
6 BS,CS,DS	3.2	O	B
7 BS,CS	3.8	O	B
8 BS,CS	6.3	O	B
8 ES	7.8	O	B
10 CS	9.6	O	B
10 DS,ES	11.2	O	B
12 CS	14.0	O	B
12 ES	15.4	O	B
14 DSII	18.0	O	B
6 AXC,AC	2.4	E	SB
6 EC	4.0	E	SB
7 AXC	3.5	E	SB
7 AWC	2.9	E	SB
7 AC	3.0	E	SB
7 APC,BC,CC	3.5	E	SB
7 QLC	6.0	E	SB
8 AC	3.5	E	SB
8 CC	5.4	E	SB
8 EC	6.8	E	SB
8 DLC,DHC	3.1	E	SB

**Pounds per ft of head

Bowl No.	Down-thrust**	Impeller type/seal	
Johnston[9] (Cont.)			
8 QLC	8.0	E	SB
9 DLC,DHC	4.5	E	SB
9 QLC	9.0	E	SB
10 ACII	6.0	E	SB
10 EMC	5.3	E	SB
10 BC,CC	8.0	E	SB
10 GMC,GHC	6.2	E	SB
10 DCII	8.5	E	SB
10 ECII	9.0	E	SB
11 EHC	6.3	E	SB
11 DLC,DHC	6.0	E	SB
11 QLC	15.0	E	SB
12 AC,EMC	9.0	E	SB
12 EHC	7.0	E	SB
12 BCII	11.0	E	SB
12 CC	11.2	E	SB
12 DC	11.6	E	SB
12 GMC	9.1	E	SB
12 GHC	10.0	E	SB
12 EC	11.5	E	SB
13 CLC,CMC,CHC	18.0	E	SB
13 DLC,DHC	9.4	E	SB
13 QLC	19.0	E	SB
14 AC	11.5	E	SB
14 BC	11.0	E	SB
14 CC	17.0	E	SB
14 DC	17.5	E	SB
14 ECII	14.0	E	SB
14 QLC	26.0	E	SB
15 GMC	13.5	E	SB
15 QLC	32.0	E	SB
16 AMC,AHC	15.0	E	SB
16 CLC,CMC,CHC	22.0	E	SB
16 GMC	16.0	E	SB
16 HMC	22.0	E	SB
16 DLC,DHC	14.0	E	SB
18 DLC,DHC	19.0	E	SB
20 DLC,DHC	26.0	E	SB
Layne Bowler (California)[10a]			
8 El	3.23	E	SB
8 TL	4.62	E	SB
8 ED	4.0	E	SB
8 EX	4.1	E	SB
8 EH	5.27	E	SB
8 C	7.56	E	SB
8 FH	7.95	E	SB
8 GH	8.0	E	SB
10 EXL	5.27	E	SB
10 EH	7.29	E	SB
10 R	8.34	E	SB
10 JK	12.18	E	SB
10 FH	14.1	E	SB

Bowl No.	Down-thrust**	Impeller type/seal	
Layne Bowler (California)[10a] (Cont.)			
12 EL	6.86	E	SB
12 EH	9.28	E	SB
12 R	11.7	E	SB
12 KH	14.75	E	SB
12 FH	16.5	E	SB
14 TM	13.0	E	SB
14 KH	19.0	E	SB
14 R	19.0	E	SB
14 MS	26.2	E	SB
14 FH	28.9	E	SB
16 AX	11.35	E	SB
16 EH	19.0	E	SB
16 KH	25.8	E	SB
16 FH	39.4	E	SB
Layne Bowler (Memphis)[11a]			
8 DRLC-DRHC	3.0	E	SB
8 PRHC	4.0	E	SB
8 RKLC-RKHC	4.0	E	SB
8 THC	7.0	E	SB
10 UHC	5.5	E	SB
10 RKLC-RKHC	6.0	E	SB
10 TLC	8.5	E	SB
10 THC	8.5	E	SB
12 RKAM	7.5	E	SB
12 URHC	5.0	E	SB
12 RKLC	9.0	E	SB
12 EMC	8.0	E	SB
12 TLC	13.0	E	SB
12 THC	13.0	E	SB
14 THC	19.0	E	SB
14 TLC	19.0	E	SB
14 RKLC-RKHC	16.0	E	SB
14 WMC	13.0	E	SB
14 WHC	13.0	E	SB
15 RMC	18.0	E	SB
15 RKHC	16.0	E	SB
15 DRLC-DRHC	12.0	E	SB
15 SKHC	17.0	E	SB
Layne Bowler (Memphis)[11]			
6 DRELC	2.0	E	SB
6 DRMC	1.4	E	SB
6 RKLC	2.5	E	SB
6 RKHC	2.5	E	SB
6 RKLC	2.5	E	SB
8 URHC	3.5	E	SB
12 RKMC	10.0	E	SB
12 RKHC	7.5	E	SB
17 DRHC	17.5	E	SB
17 DROHC	19.0	E	SB
18 SKHC	33.0	E	SB
18 RKLC	27.0	E	SB
18 RKMC	27.0	E	SB
18 RKHC	27.0	E	SB

**Pounds per ft of head

Bowl No.	Down-thrust**	Impeller type/seal	
Verti-Line Pumps[12,13]			
4 RL	1.7	E	SB
4 RH	1.7	E	SB
4 RLC	1.5	E	SB
4 RHC	1.5	E	SB
6 TL	3.5	E	SB
6 TM	3.3	E	SB
6 TH	3.3	E	SB
6 EHL	2.1	E	SB
6 EHM	2.1	E	SB
6 RL	3.1	E	SB
6 RM	3.1	E	SB
6 RH	3.1	E	SB
7 RM	5.3	E	SB
7 RH	5.3	E	SB
8 ELM	3.2	E	SB
8 EDXL	4.0	E	SB
8 EDL,EDM,EDH	4.0	E	SB
8 RXL	5.3	E	SB
8 RL,RM,RH	5.3	E	SB
8 FHL	8.0	E	SB
8 FHM,FHH	8.0	E	SB
10 EXXL	5.3	E	SB
10 EXLL,EXLM, EXLH	5.3	E	SB
10 EHXL	7.3	E	SB
10 EHL,EHM	7.3	E	SB
10 RL,RM,RH	8.3	E	SB
10 JKL,JKM,JKH, JKXH	12.2	E	SB
10 FHM,FHH	14.1	E	SB
12 ELL,ELM,ELH	6.9	E	SB
12 EHL	9.3	E	SB
12 KHMM,KHHM	14.8	E	SB
12 EHM,EHH	9.3	E	SB
12 RXL	11.7	E	SB
12 RL,RM,RH	11.7	E	SB
12 KHXL,KHLM	14.8	E	SB
12 FHL,KHM,FHH	16.5	E	SB
12 FHXM	16.5	E	SB
14 AXL	14.0	E	SB
14 AL,AM,AH	14.0	E	SB
14 TML,TMM,TMH	13.0	E	SB
14 KHL,KHM,KHH	19.0	E	SB
14 RXL	19.4	E	SB
14 RL,RM,RH	19.4	E	SB
14 MSL,MSH	26.2	E	SB
14 FHM	28.9	E	SB
16 EHL,EHM,EHH	19.0	E	SB
16 KHXL	25.8	E	SB
18 EHL	25.8	E	SB
Welline Pumps[14]			
6 KL	2.6	E	SB
6 KH	3.2	E	SB
8 KL	4.6	E	SB

Bowl No.	Down-thrust**	Impeller type/seal	
Welline Pumps[14] (Cont.)			
8 KH	5.6	E	SB
8 TH	5.2	E	SB
10 KL	6.6	E	SB
10 KH	5.2	E	SB
10 KEH	4.4	E	SB
11 BH	8.4	E	SB
12 KL	10.0	E	SB
10 HL,HM,HH	11.0	E	SB
12 KM	6.7	E	SB
12 KEH	7.5	E	SB
12 KH	8.5	E	SB
12 TL	12.0	E	SB
12 TH	12.2	E	SB
14 ML	19.0	E	SB
14 TL	18.4	E	SB
14 MM	19.0	E	SB
14 TH	15.5	E	SB
14 MH	19.0	E	SB
15 CH	17.0	E	SB
National[15]			
M 8 XLC	4.0	E	S
M 8 MC,HC	4.0	E	S
M 8 XHC	4.9	E	S
M 10 LC	5.3	E	S
M 10 HC	5.4	E	S
H 10 MC,HC	6.9	E	S
M 11 LC,MC,HC	7.9	E	S
M 12 LC,MC,HC	7.9	E	S
M 14 MC,HC,XHCT	12.5	E	S
H 14 MC,XHC	20.3	E	S
Peerless[16a]			
8 LA	3.7	E	SB
8 MA	5.6	E	SB
8 HX	8.4	E	SB
10 LA	5.1	E	SB
10 MA	7.6	E	SB
10 HXB	8.3	E	SB
12 LA	6.9	E	SB
12 MA	10.5	E	SB
12 HXA	15.6	E	SB
14 LA	9.7	E	SB
14 MA	13.5	E	SB
14 HXB	17.3	E	SB
16 M	18.2	E	SB
16 MA	22.6	E	SB
16 HXX	24.0	E	SB
Peerless[16]			
6 LB	1.5	E	SB
6 LA	2.7	E	SB
6 MA	2.8	E	SB
6 H	4.5	E	SB

**Pounds per ft of head

Bowl No.	Down-thrust**	Impeller type/seal	
Peerless[16] (Cont.)			
6 HXB	4.5	E	SB
7 LB	2.4	E	SB
7 LA	3.3	E	SB
7 HXB	4.1	E	SB
7 HX	6.4	E	SB
8 LB	2.6	E	SB
8 HXB	3.6	E	SB
8 MFH	10.5	E	SB
9 LA	3.9	E	SB
10 LB	4.1	E	SB
10 HH	9.5	E	SB
10 MFH	16.0	E	SB
11 MB	6.2	E	SB
12 LB	6.0	E	SB
12 MB	7.5	E	SB
12 HXB	8.5	E	SB
12 HXH	11.0	E	SB
14 LC	5.7	E	SB
14 MC	10.0	E	SB
14 HH	20.0	E	SB
15 LC	6.4	E	SB
15 MA	15.0	E	SB
16 MC	12.7	E	SB
16 HXB	20.3	E	SB
16 HH	30.0	E	SB
18 MA	22.5	E	SB
18 HXB	27.2	E	SB
18 HH	35.0	E	SB
Sargent[17]			
10 SA	5.3	E	SB
11 SA	9.0	E	SB
12 SA	11.2	E	SB
13 SAM	18.0	E	SB
14 SA	14.8	E	SB
Valley[18]			
4 HMO	1.2	O	B
4 HHO	1.3	O	B
6 MLO	2.3	O	B
6 MMO	3.2	O	B
6 MHO	3.3	O	B
6 HLO	3.8	O	B
6 HMO	4.0	O	B
6 HHO	4.1	O	B
8 MMO	5.6	O	B
8 HMO	5.6	O	B
10 MMO	8.9	O	B
10 HHO	9.2	O	B
12 HMO	12.7	O	B
14 XHO	28.0	O	B
8 MHE	3.5	E	SB
8 HHE	4.0	E	SB
10 LHE	5.2	E	SB

Bowl No.	Down-thrust**	Impeller type/seal	
Valley[18] (Cont.)			
10 LME	5.2	E	SB
10 MHE	6.0	E	SB
12 LME	7.3	E	SB
12 LLE	7.3	E	SB
12 MME	7.5	E	SB
12 MHE	7.5	E	SB
12 HHE	8.6	E	SB
14 XHE	20.0	E	SB
Western[19]			
6 WM	2.3	E	S
6 WOM,HA	4.2	E	S
8 RA	3.0	E	S
8 WL	3.2	E	S
8 HA	4.2	E	S
8 WM	5.6	E	S
8 WOL	6.0	E	S
8 WOM	10.0	E	S
10 WL	4.6	E	S
10 MA	5.7	E	S
10 WM	6.8	E	S
10 F	7.3	E	S
10 WH	10.8	E	S
11 MA	9.0	E	S
12 F	6.8	E	S
12 WL	10.0	E	S
12 WM	14.6	E	S
12 N,WH	15.6	E	S
13 MA	11.4	E	S
14 F	12.0	E	S
14 WM	20.0	E	S
14 NC	21.4	E	S
15 WM	25.0	E	S
Western Land Roller[20]			
6 E-H	3.1	O	B
8 A-H,M	6.0	O	B
10 C-H,HC	11.3	O	B
10 C-M,MC	7.7	O	B
10 D-M,H	15.5	O	B
12 B-H	13.9	O	B
12 C-H,HC	12.5	O	B
12 C-L,M	11.0	O	B
12 B-HC	13.9	O	B
12 D-H,HC,H½C	23.0	O	B
12 X-H	12.6	O	B
14 C-H,HC	18.0	O	B
14 C-M	13.7	O	B
14 D-H,HC,H½C,M, & MC	30.2	O	B
16 O-H	33.2	O	B
10 KA-H	6.0	E	SB
12 KA-H	8.9	E	SB
12 KB-H	8.4	E	SB

**Pounds per ft of head

Bowl No.	Down-thrust**	Impeller type/seal	
Worthington[21]			
6 L-4,6	1.8	E	SB
6 M-9,11	2.5	E	SB
6 H-15,18	3.4	E	SB
8 L-12,15	3.1	E	SB
8 M-23,28	4.3	E	SB
8 H-38,48	6.1	E	SB
10 L-22,30	4.0	E	SB
10 M-41,50	5.5	E	SB
10 H-61,75	7.0	E	SB
10 HH-90,110	9.9	E	SB
12 L-40,54	7.2	E	SB
12 M-75,90	7.9	E	SB
12 H-110,135	9.8	E	SB
12 HH-165,200	14.5	E	SB
14 M-135,160	12.0	E	SB
14 HH-220,276	21.0	E	SB
14 HH-250,300	20.0	E	SB
15 L-82,110	12.0	E	SB
15 M-154,185	12.1	E	SB
15 H-226,277	15.7	E	SB
Worthington[21a] (& Winthroap)			
8-100 & 125	4.3	E	SB
8-120	4.4	E	SB
8-150 & 200	6.8	E	SB
8-225	7.2	E	SB
8-250,300 & 350	9.4	E	SB
10-50 & 80	4.6	E	SB
10-100	5.7	E	SB
10-175,225,250,300, 302,350, & 352,400	6.9	E	SB
10-402	10.3	E	SB
10-450,500,502, & 550	12.0	E	SB
10-600	14.2	E	SB
10-602	15.6	E	SB
12-250,300 & 350	6.3	E	SB
12-252	5.7	E	SB
12-352,400 & 450	8.0	E	SB
12-425,500#1	7.7	E	SB
12-500#2	9.1	E	SB
12-503,503-602 & 602	10.5	E	SB
12-600 & 700	11.0	E	SB
12-900	17.8	E	SB
12-1000	19.2	E	SB
12-1200	21.8	E	SB
14-250 & 300	8.4	E	SB
14-400,500 & 600	8.2	E	SB
14-700,800,900	14.9	E	SB
14-850,1100	13.4	E	SB
14-1000,1200 & 1202	19.9	E	SB
14-1400 & 1600	26.4	E	SB
16-450,500,650 & 750	5.7	E	SB
16-800	12.0	E	SB

Bowl No.	Down-thrust**	Impeller type/seal	
Worthington[21a] (& Winthroap) (Cont.)			
16-1125 & 1350	17.3	E	SB
16-1250 & 1500	18.5	E	SB
16-1750	24.8	E	SB
16-2250	32.8	E	SB

**Pounds per ft of head

Table 3. English to metric conversions.

	Multiply By:
Inches to cm	2.54
Feet to meters	0.305
PSI to kilopascals	6.895
Feet of head to kilopascals	2.985
Threads per inch to threads per cm	0.394
Pounds to kg	0.454
lb/ft of head to kg/kilopascal	0.153

1. Reprinted from A & C Deep Well Turbine Pumps, Lubbock, Texas.
2. Technical Data 5055, Page 7, Berkeley Pump Company, Berkeley, California.
3. Derived from Sec. 2-210, Engineering Data, Byron Jackson Pump Division, Borg-Warner Corporation.
4. Engineering Data, Fairbanks-Morse Irrigation Pump Division, Colt Industries, Kansas City, Kansas.
5. Reprinted from Page E-10, Engineering Data, Floway Pumps, Beabody FloWay, Inc., Fresno, California.
6. Reprinted from Engineering Data, Vertical Pump Division, Goulds Pumps, City of Industry, California.
7. Reprinted from Engineering Data, Hydro Corporation, Amarillo, Texas.
8. Reprinted from Sec. 2200, Page 10, Technical Data, Jacuzzi Bros., Inc., Little Rock, Arkansas.
9. Reprinted from Sec. 9, Pages 81, 82, 801 Engineering Data, Johnston Pump Company, Glendon, California.
10. Reprinted from Sec. 31, Page 2, Engineering Data, Layne-Bowler Pump Company, Los Angeles, 22 California.
11. Reprinted from Engineering Data, Layne-Bowler, Inc., Memphis, Tennessee.
12. Reprinted from Sec. 1110 Engineering Data, Verti-Line Layne & Bowler, Aurora Pump, La Puente, California.
13. Reprinted from Sec. 1110, Engineering Data, Verti-Line, Aurora Pump, North Aurora, Illinois.
14. Reprinted from Sec. 300, Engineering Data, Wel Line, Layne-Bowler, Inc., Memphis, Tennessee.
15. Reprinted from Engineering Data, National Pump Company, Glendale, Arizona.
16. Reprinted from Sec. 110, Page 6, and Sec. 130, Page 2, Peerless Pump Division, Food Machinery and Chemical Corporation, Los Angeles, California.
17. From Sargent Pipe Company, Broken Bow, Nebraska.
18. Reprinted from Sec. 6, Engineering Data, Valley Pump Company, Valley Industries, Incorporated, St. Louis, Missouri.
19. Derived from Page E-41, Engineering Data, Western Pump Company, San Jose, California.
20. Reprinted from Bulletin E1-10-75, Engineering Information, Western Land Roller Company, Hastings, Nebraska.
21. Reprinted from Engineering Data, Worthington Pump Corporation, Denver, Colorado.

The Cooperative Extension Service provides information and educational programs to all people without regard to race, color or national origin.