University of Nebraska - Lincoln
DigitalCommons@University of Nebraska - Lincoln

Historical Materials from University of Nebraska-Lincoln Extension

Extension

11-1950

EC728 Temporary or Emergency Silos

John C. Steele

Follow this and additional works at: https://digitalcommons.unl.edu/extensionhist

Steele, John C., "EC728 Temporary or Emergency Silos" (1950). *Historical Materials from University of Nebraska-Lincoln Extension*. 2248.
https://digitalcommons.unl.edu/extensionhist/2248

This Article is brought to you for free and open access by the Extension at DigitalCommons@University of Nebraska - Lincoln. It has been accepted for inclusion in Historical Materials from University of Nebraska-Lincoln Extension by an authorized administrator of DigitalCommons@University of Nebraska - Lincoln.

AGRI
S
85
E7
#728
E.C. 728

TEMPORARY OR EMERGENCY SILOS

RECEIVED
MAR 1 1 1970
COLLEGE OF AGRICULTURE
LIBRARY

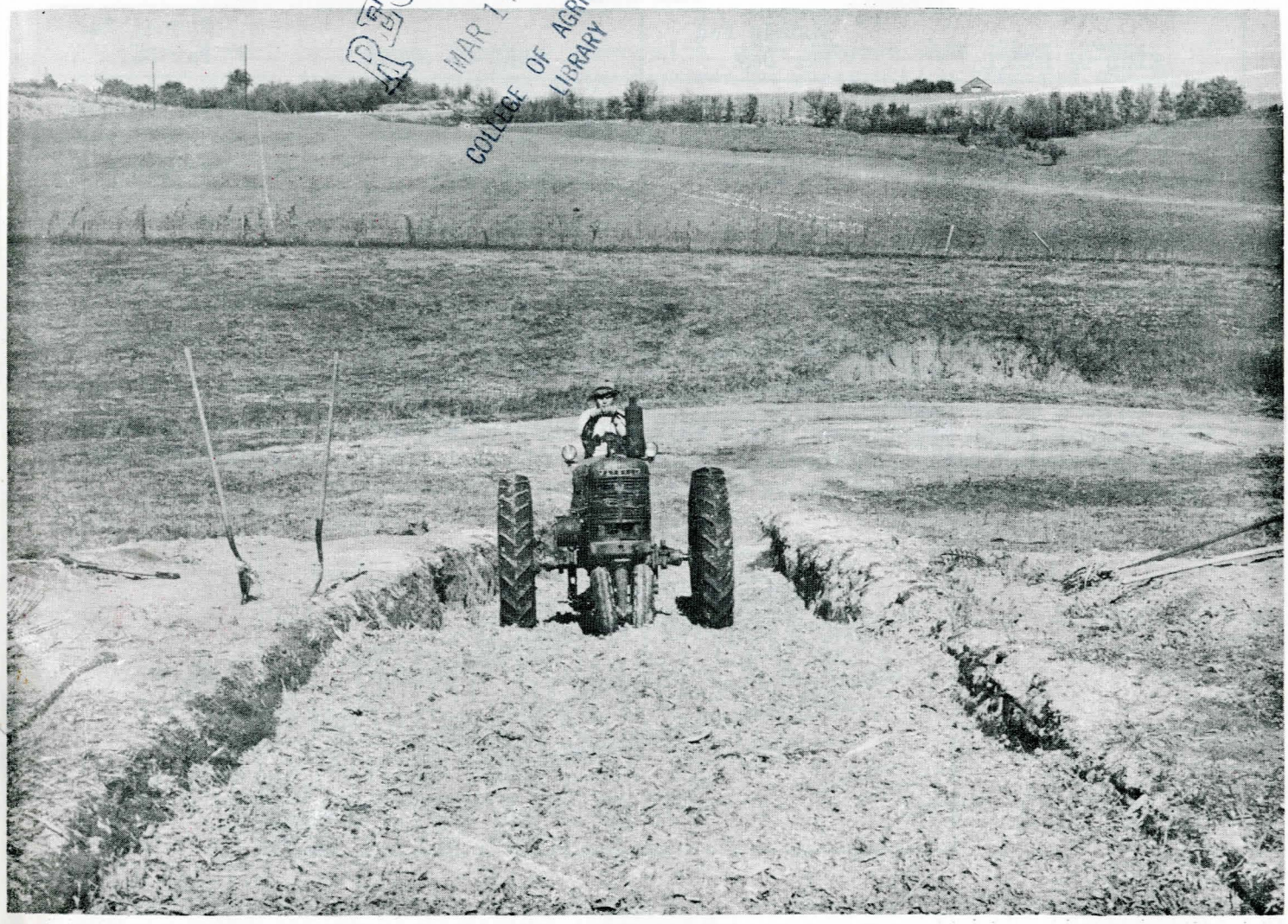

NOV., 1950

E.C. 728

COOPERATIVE EXTENSION WORK IN AGRICULTURE AND HOME ECONOMICS, UNIVERSITY OF NEBRASKA COLLEGE OF AGRICULTURE, AND THE UNITED STATES DEPARTMENT OF AGRICULTURE COOPERATING. W. V. LAMBERT, DIRECTOR, LINCOLN.

C13

TABLE I

Approximate Daily Silage Rations*

KIND OF STOCK	Pounds Fed Per Day	KIND OF STOCK	Pounds Fed Per Day
Cows	50 to 60	Fattening Two Year Olds	35
Weanling Stock Calves	25 to 35	Breeding Ewes	3 to 5
Yearling Stockers	40 to 45	Fattening Lambs	2
Fattening Calves	20	Dairy Cows	40 to 50
Fattening Yearlings	25	Yearling Dairy Heifers	20 to 25

*The amounts shown are figured for a full allowance of silage and would be reduced if supplemented with considerable quantities of other feeds. For example, one pound of good alfalfa hay can be substituted for 3 pounds silage.

TEMPORARY OR EMERGENCY SILOS

John C. Steele

In an emergency, such as a drouth or early frost, a silo makes it possible to salvage a corn or sorghum crop as silage. Where a permanent silo is not available a temporary type of silo can be used. Several kinds of silos can be built in a hurry when it becomes necessary: (1) a trench silo; (2) a temporary silo of slat-cribbing or snow-fencing, lined with waterproof paper; and (3) the baled straw silo. All three types can be built with little cash outlay and without skilled labor.

TRENCH SILO

The trench silo will probably meet with more success than other types of temporary silos, although more labor is required in construction than for the snow-fence or baled straw type. It is windproof, frostproof, filled easily and takes less power to fill. However, the spoilage is greater than in a permanent silo; it is dangerous unless roofed; is short-lived unless side walls are lined; and it is difficult to fill in when finally abandoned.

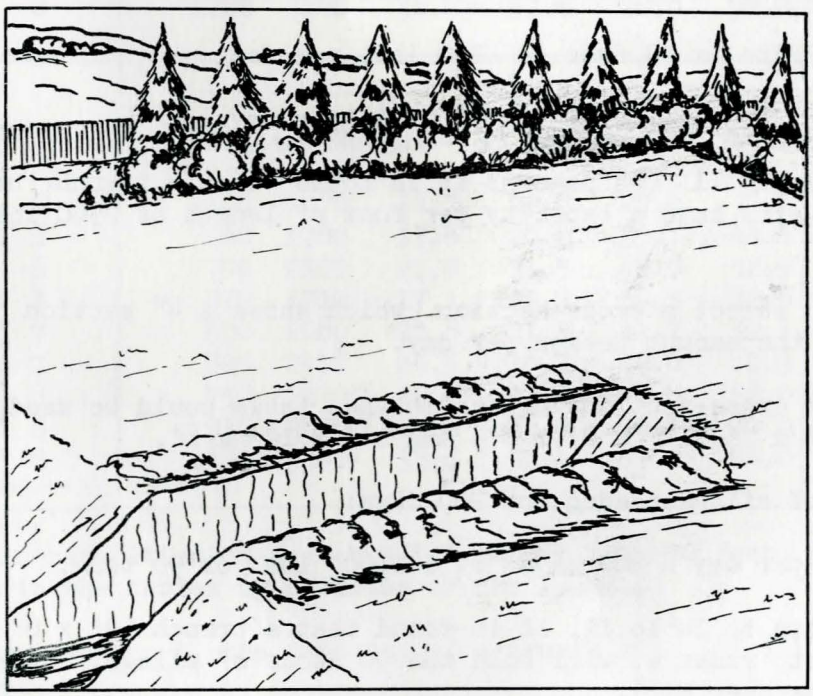

Figure 1
Trench silo located in a side hill. Note windbreak which will provide snow protection.

LOCATION:

A trench silo can be built any place where drainage is sufficient for a house basement. An ideal location is in a side hill or knoll where the lower end is level with and near the feed lot. (Fig. 1). The trench can be located on level ground if the excavated soil is used to bank around the trench to keep the surface water from

entering. A tree windbreak or temporary snowfence will provide snow protection. Either should be 60 to 100 feet from the north and west edges of the trench.

When sub-surface seepage or a high water table is apt to be encountered it would be more practical to use some type of above-ground silo. This is also true where the soil is so sandy that the side walls are apt to cave when the silo is empty.

SIZE:

The size of trench to dig depends upon the number of livestock to be fed. The cross-section is determined by the amount of silage needed daily, while the length of the feeding period determines the length of the silo.

In determining the size of trench needed for any herd of livestock, it is necessary to know how many pounds of silage each animal will probably consume per day. See Table I.

Example:

To feed 15 cows and 50 ewes for 200 days would require:

Cows - 50 lbs. x 15 cows = 750 lbs. per day.

Ewes - 3 lbs. x 50 ewes = 150 lbs. per day.

Total 900 lbs. per day.

Referring to Table II (on page 3) it is found that a trench having 10' x 6' x 8' cross-section will have a capacity per foot of length of 2560 lbs. or 850 lbs. per 4".

NOTE: Always select a cross-section which shows a 4" section as having a capacity less than the amount needed per day.

Any one of the cross-sections given in the table could be used if desired, except the 12' x 8' x 7', 12' x 8' x 8', and 14' x 10' x 8'.

Total amount of silage needed for 200 days:

900 lbs. per day x 200 days = 180,000 lbs. or 90 tons.

Referring again to Table II, it is found that a trench 10' x 6' x 8', 60 feet long and two 20-foot runways, will hold the 90 tons of silage. (See Footnote of Table II for lengths over 50').

Good silage made from corn or sorghum yielding from 30 to 40 bushels to the acre, if thoroughly packed, will weigh approximately 40 pounds per cubic foot. Silage made from immature or drouth-damaged crops which lack grain will weigh 35 pounds or less per cubic foot, depending upon the maturity of the crop and the moisture content.

To calculate the capacity of a trench silo, multiply the average width in feet by the depth in feet to get the cross-sectional area, and then multiply by the length in feet of the trench proper to get the volume in cubic feet.

TABLE II

CAPACITIES OF TRENCH SILOS

CROSS SECTIONAL Dimensions in Feet Top Width	Bottom Width	Depth	BODY OF TRENCH Length 4"	1'	20'	30'	40'	50'	SLOPING RUNWAY Length 15'	20'	25'
			Section A Silage Weight - 40 Lbs. per Cu. Ft.								
			Lbs.	Lbs.	Tons	Tons	Tons	Tons	Tons	Tons	Tons
8	6	6	560	1680	16.8	25.2	33.6	42.0	4.2	5.6	7.0
10	7	6	680	2040	20.4	30.6	40.8	51.0	5.1	6.8	8.5
12	8	6	800	2400	24.0	36.0	48.0	60.0	6.0	8.0	10.0
8	6	7	650	1960	19.6	29.4	39.2	49.0	4.9	6.5	8.1
10	7	7	790	2380	23.8	35.7	47.6	59.5	5.9	7.9	9.9
12	8	7	930	2800	28.0	42.0	56.0	70.0	7.0	9.3	11.6
10	6	8	850	2560	25.6	38.4	51.2	64.0	6.4	8.5	10.6
12	8	8	1070	3200	32.0	48.0	64.0	80.0	8.0	10.7	13.3
14	10	8	1280	3840	38.4	57.6	76.8	96.0	9.6	12.8	16.0
			Section B Silage Weight - 35 Lbs. per Cu. Ft.								
8	6	6	490	1470	14.7	22.0	29.4	36.8	3.6	4.9	6.1
10	7	6	590	1780	17.8	26.8	35.7	44.6	4.4	5.9	7.4
12	8	6	700	2100	21.0	31.5	42.0	52.5	5.3	7.0	8.7
8	6	7	570	1710	17.1	25.7	34.3	42.9	4.3	5.7	7.1
10	7	7	690	2080	20.8	31.2	41.7	52.1	5.2	6.9	8.6
12	8	7	820	2450	24.5	36.7	49.0	61.3	6.1	8.2	10.2
10	6	8	750	2240	22.4	33.6	44.8	56.0	5.6	7.5	9.3
12	8	8	930	2800	28.0	42.0	56.0	70.0	7.0	9.3	11.6
14	10	8	1120	3360	33.6	50.4	67.2	84.0	8.4	11.2	14.0

To obtain capacities of trench silos longer than 50 feet, simply multiply the tonnages given in the tables by a factor of the length.

Example: Using Section A, the capacity of a trench silo 12' x 8' x 6' and 80 feet long:

Tonnage in 40-foot trench x 2 = tonnage in 80-foot trench.

48.0 tons x 2 = 96 tons.

Example: Find the capacity of a trench 12 feet wide at the top, 8 feet wide at the bottom, 6 feet deep and 60 feet long.

$$\frac{8 \text{ ft.} + 12 \text{ ft.}}{2} \times 6 = 60 \text{ sq. ft. cross-sectional area.}$$

Assuming silage to weigh 40 pounds per cubic foot, this trench will hold 60 square feet x 1 foot x 40 pounds = 2400 pounds or 1.2 tons per foot of length. Then a 60-foot trench will hold 1.2 tons x 60 feet = 72 tons.

The capacities of the silo runways are figured separately from the trench proper. Silage in the runways will weigh approximately 30 per cent less than that in the main part of the trench. This is due to the decreased depth where the silage does not pack as well. Runway capacities are listed separately in Table II.

CONSTRUCTION:

Having decided upon the size and location of the silo, the first step in digging the trench is to stake the outline on the ground. Stakes should be set at all corners and at the points where the runways join the main part of the trench (Fig. 2). The next step is the actual digging of the trench. This may be done with any type of dirt moving equipment available. If the time element is not important, two men using a tractor, plow, slip or fresno can do the job. The so-called "tumble bug" scraper or small carry-all which can be pulled by the farm tractor can be used to remove the dirt at a faster rate. In most areas of Nebraska it will be possible to hire dirt moving contractors who have the equipment and experience to dig a trench in a hurry.

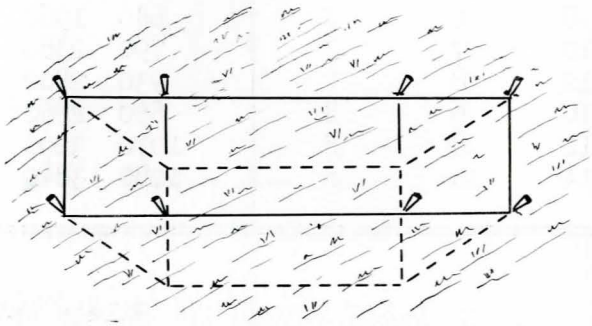

Figure 2
Stay a few inches inside the stakes until desired depth is reached. This will allow for smoothing the side walls.

In digging the trench, shape it as shown in Fig. 3. The usual slope given to the side walls in firm soils is one foot inward for every four feet of depth. In lighter soils where the walls cave easily, the slope should be increased. Care should be taken to keep the walls straight and smooth, thereby preventing small pockets which cause silage to spoil. Usually it is necessary to finish the walls with a spade.

FILLING:

Either stationary cutters or field cutters can be used in chopping silage crops to be put in the silo. The finer the fodder is cut the better it will pack, thus resulting in a better quality silage with less spoilage.

Wagons or trucks loaded in the field with a field cutter can be quickly and easily unloaded in the trench without scooping. Before loading, lay a piece of woven wire, slightly narrower than the box and about 5 feet longer, along the bottom of the box. One end of the wire should protrude under the rear endgate and

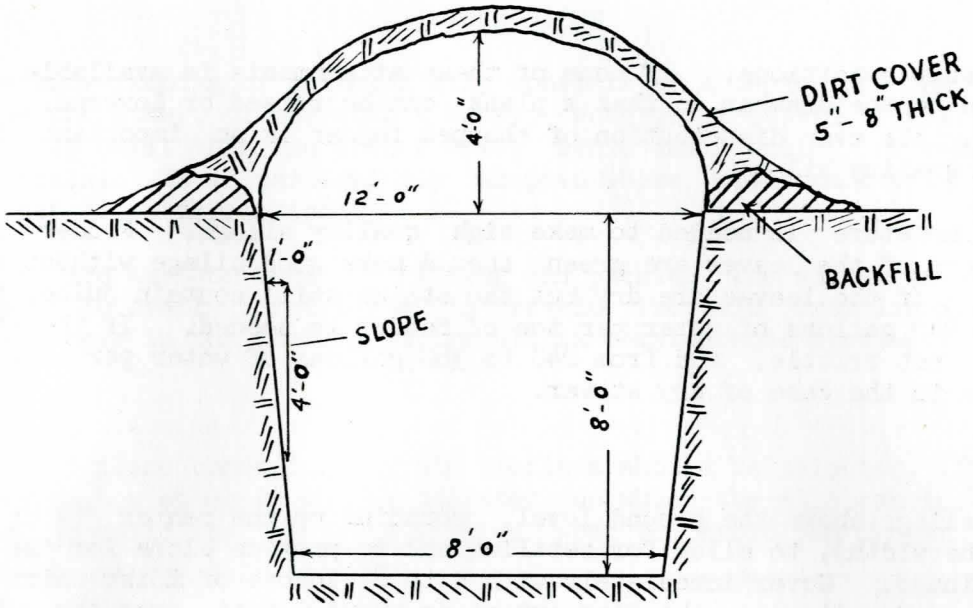

Figure 3
A typical cross-section of a trench silo.

the other should carry out over the front endgate. Tie the ends of each of the line wires to a piece of pipe or timber (one at each end) that is 6 inches longer than the width of the box. The load can be rolled off by attaching a well anchored rope, cable or chain to the pipe or timber at the forward end of the wire, and driving ahead. The pipe or timber at the back end of the wire prevents the wire from being drawn through under the load (Fig. 4). Wagons or trucks having dump boxes are, of course, ideal for filling trench silos.

Proper packing of the silage is very important as the exclusion of air is one of the requisites of making good silage. Due to the shallow depth in a trench this packing must be continuous, from the first load to the last. Driving in with loads does some effective packing, but not enough. A tractor or truck should be driven back and forth two or three times after each load of silage is dumped. Many farmers continue running a tractor back and forth over the silage for a few hours after the silo is full. This insures adequate packing of the silage.

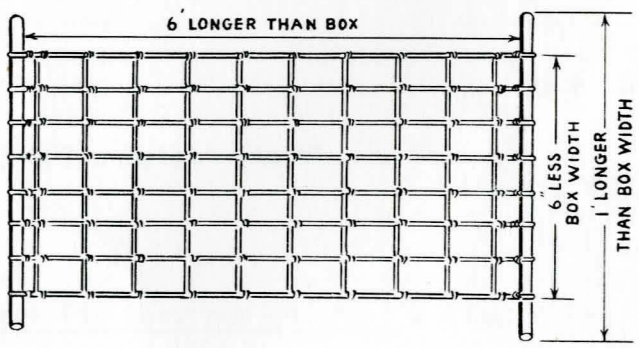

Figure 4
Woven wire sling for removing silage from wagons or trucks.

If a good job of packing is to be done it is necessary to distribute the silage evenly over the surface. This can be done with a slip scraper or fresno, or an easier way is to use a leveling device on the tractor while packing. Most farmers today have manure loaders, hay loaders, or cultivators that attach directly on to the tractor. A plank fastened to the loader arms in place of the scoop or teeth, or to the shanks of the rear gang of the cultivator, can be raised

or lowered to suit conditions. If none of these attachments is available a lever can be attached to the drawbar so that a plank can be raised or lowered. Whatever the means used, the even distribution of chopped fodder is an important factor in obtaining high quality silage.

Plenty of moisture is needed to make high quality silage. Fodder crops on which 50% or more of the leaves are green should make good silage without the addition of water. If the leaves are dry but the stalks still contain juice, the addition of 120 to 240 gallons of water per ton of fodder is needed. If the stalks are still pliable, not brittle, add from 240 to 360 gallons of water per ton, and 480 gallons per ton in the case of dry stover.

COVERING:

Pile the silage above the ground level, rounding up the center (4 or 5 feet, depending on the width), to allow for settling and to provide slope for the cover so as to give drainage. Cover immediately with 5 to 8 inches of moist dirt evenly distributed over the silage, the dirt extending about 2 feet over the outer edges (See Fig. 3).

REMOVING SILAGE:

Open the silo at one end and remove the silage in sections or slices from top to bottom. At least 1 foot should be fed every 3 or 4 days. If an open end is exposed too long before feeding, waste will result because of spoilage. During the winter months, when there is the least spoilage, a supply for two or three days can be removed at one time.

FENCE SILOS

The snow-fencing or cribbing silo consists of a series of rings of fencing, one above the other, lined with a heavy, waterproof paper. This type of silo is more quickly built than the trench silo, but a small outlay of cash is necessary for materials. It is particularly adapted where soil conditions are such as to make trench silos impractical.

More care must be used in filling and packing the silage in this silo. The weight must be evenly distributed to prevent the silo from leaning and falling over. Weakness in the fencing may result in considerable spoilage.

LOCATION:

A level place convenient to the feedlots should be selected. If no level site is available, a space should be provided on which the silo can be built. It is essential to build the silo on a leveled spot to avoid the danger of having it topple after it has been filled.

SIZE:

These silos can be built in many sizes, but the height after settling should never exceed the diameter. The size of the silo will be determined by the herd of livestock to be fed. The cross-sectional area should be small enough to permit the feeding of at least 1 foot in 4 days.

CAPACITY:

The capacity of any silo is found by multiplying the volume (in cubic feet) by the weight of a cubic foot of silage.

The weight of silage varies from 30 to 45 pounds per cubic foot, depending on the depth, rate of filling, amount of packing, moisture, length of cut and kind of silage. An average weight of 35 pounds per cubic foot is accurate enough for making estimates.

Volume of any circular silo is:

$$\frac{\text{Dia. (in ft.)} \times \text{dia. (in ft.)}}{4} \times 3\text{-}1/7 \times \text{height (in ft.)} = \text{Volume (in cu. ft.)}$$

Then, capacity in tons is:

$$\frac{\text{Vol. (in cu. ft.)} \times \text{Wt. of ensilage (in lbs. per cu. ft.)}}{2000} = \text{Tons}$$

Example:

Capacity of a silo 14' in diameter and 11' in height:

$$\frac{14 \text{ ft.} \times 14 \text{ ft.}}{4} \times 3\text{-}1/7 \times 11 \text{ ft.} = 1694 \text{ cu. ft.}$$

Then:

$$\frac{1694 \text{ cu. ft.} \times 35 \text{ lbs. per cu. ft.}}{2000} = 29.6 \text{ tons.}$$

Table III (page 9) gives the approximate capacities and also the materials needed to build fence silos of different sizes.

CONSTRUCTION AND FILLING:

Construction precedes fillings and continues as filling progresses with this type of silo. Following carefully the suggestions given below and taking special care to chop the silage evenly and to pack it uniformly will reduce the spoilage to a minimum.

1. Lay Out a Circle.

Drive a stake at the approximate center of the site selected for the silo. Fasten a wire or heavy cord to this stake. Measure off on the wire a distance equal to one-half the diameter of the silo. At that point on the wire fasten a marker. With this marker lay out a circle on the ground (Fig. 5).

Figure 5
An easy method of laying out a circle on the ground.

2. Level the Ground:

The ground where the ring is to stand must be level. Use a carpenter's level, and dig away the high spots. The ground where the fencing rests must be firm (not filled in).

3. Set the First Ring of Fencing:

Before new fencing is used, it must be carefully stretched. Use a woven wire stretcher or tractor. Cut all sections of fencing before starting construction, being careful to make them all the same length. Unwind the line wires and remove one lath at each end. Set the first section along the marked circle, lapping the ends at least two slats. Be sure to place wood against wood. Splice the ends securely, wire to wire, with all sharp wire ends turned out. A few slender stakes about 4 feet long, driven in the ground on the outside, will help hold the fence in place while getting started.

4. Line With Paper:

Cut heavy, waterproof paper into strips not over 15 feet long. Use three or more strips (depending upon size of silo) for each section. Lap the ends $1\frac{1}{2}$ to 2 feet. That will allow the paper to slip at the joints to avoid tearing when the silo expands under the pressure of the silage. Clip the paper to the inside of the fence temporarily with clothes pins, turning 3 or 4 inches of the bottom edge inward against the ground. Slip the clothes pins over the fence and paper at about 2-foot intervals (Fig. 6).

5. Fill the First Section:

Pile the first silage around the wall to hold the paper and fence in place. Adjust the discharge pipe of the filler to deliver the silage at the center of the silo. Tramp the silage solid and even as the section fills up. The center should

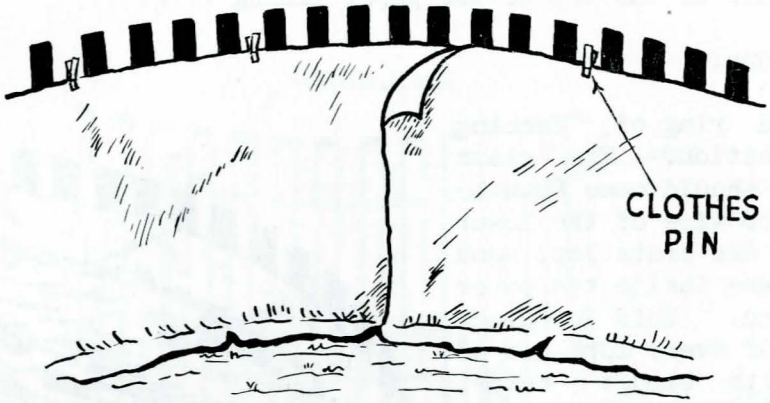

Figure 6
Method of lining the inside of the cribbing with paper. Note how the lower edge is lapped over on the ground to make an air seal.

TABLE III

Approximate Capacities and Required Materials for Fence Silos

(35 pounds per cubic foot)

SIZE OF SILO			FENCING*		Length of No. 9** Wire (ft.)	PAPER***
Diameter (ft.)	Height (ft.)	Tons	Pieces Number	Length of each ft. & inches		(ft.)
10½	11	16	3	33	210	117
12	11	22	3	37-8	240	132
12	14½	28	4	37-8	320	176
14	11	29	3	44	276	156
14	14½	39	4	44	368	208
16	14½	50	4	50	416	232
16	18	63	5	50	520	290
17	14½	57	4	53-6	440	244
17	18	71	5	53-6	550	305
18	14½	64	4	56-8	464	268
18	18	80	5	56-8	580	335
19	18	89	5	60	610	350
20	18	98	5	63	650	365

* These lengths should be measured after the wire has been stretched.
** 2 hoops for each section.
*** 4 feet wide.

In addition, a ball of twine and a supply of spring clothes pins are needed.

be kept higher than the edge. Be sure the ring stays round. Continue filling to within about 6 inches of the top of the paper lining (Fig. 7).

6. Add More Sections:

Set the second ring of fencing inside the first section. The slats of the top section should come down to ½ inch below the top wire of the lower section. Be sure the slats lap, wood against wood, and are inside the paper of the lower section. Hold in place by tying the ends of every 10th set of slats together with binder twine. Line with paper, being sure that it laps 4 to 6 inches inside the lower strip (Fig. 8).

Fill the second section to within about 6 inches of the top of the lining. When this section is about half full, run two pieces of No. 9 wire around the first section, approximately 16 inches apart, splicing the ends tightly. One-fourth inch or 5/16-inch turnbuckles are an ideal way to fasten and tighten these wires (Fig. 9).

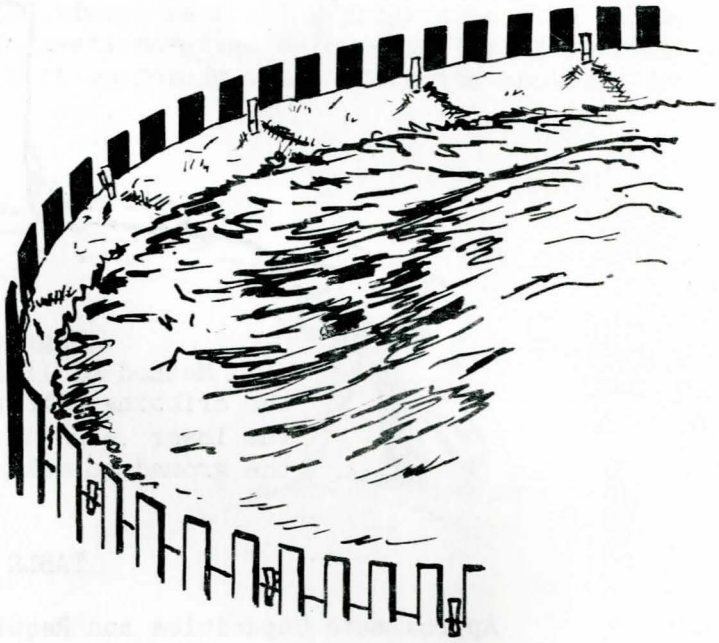

Figure 7
First section ready for the second ring. Note clothes pins holding the paper and also the position of the silage.

After the second section is filled, cut away the binder twine ties. Slats must not be fastened together permanently, as that would prevent proper settling of the silo.

Additional sections are handled in the same manner until the silo reaches the desired height.

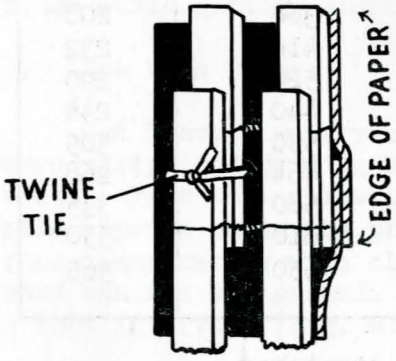

Figure 8
The correct way to lap slats and paper. Note how slats are tied together with binder twine.

7. Cover the Silo:

Turn the unsupported paper in over the top of the silage and cover the top with about 5 inches of moist dirt. Another method is to cover the silage with waterproof paper and fasten it down with woven wire weighted at the edge.

8. Using the Silo:

When the silage is ready to use, remove the covering and any spoiled silage. As the silage is used, the sections of fencing can be removed, carefully rolled up and stored for future use.

Remember that about a foot should be fed every four days to prevent spoilage.

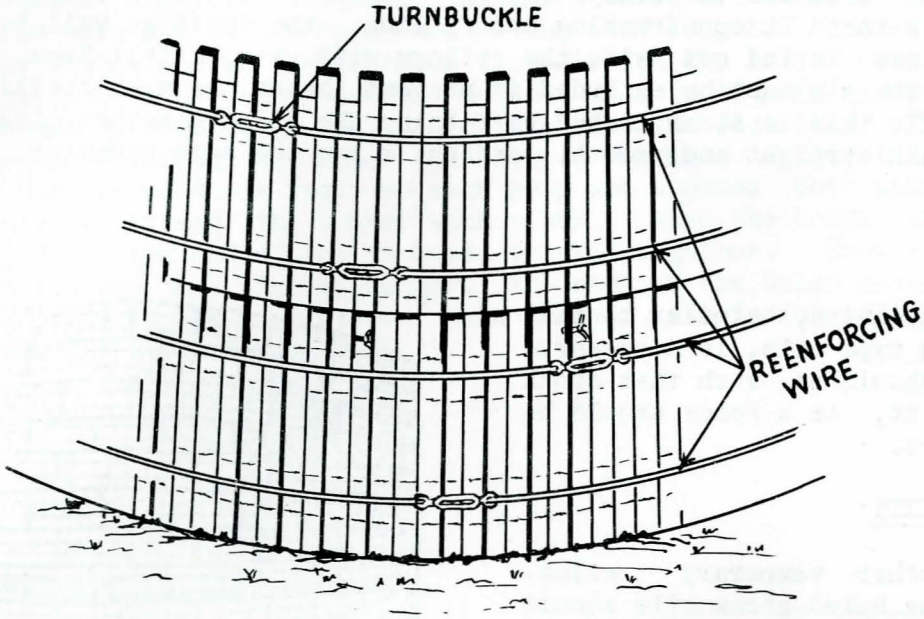

Figure 9

Temporary fence-silo showing reinforcing wires in place. Note turnbuckles used to tighten the wire. Caution: Wires should not be placed on any section until the section above is at least half filled with silage.

BALED STRAW SILO

A low cost silo for temporary storage can be built with baled straw. If proper care is taken in constructing and filling, the spoilage will be negligible. Usually the straw is fed out with the silage with very little loss. In using any type silo the air must be excluded to prevent the silage from spoiling. In the baled straw silo this is accomplished by fitting the bales together closely, keeping the inside wall straight and smooth, and the silo the same diameter from top to bottom (Fig. 10).

LOCATION:

A level location, similar to that of the fencing type silo, is necessary. The location should be such that stock cannot get at it, or a fence should be built around it.

SIZE AND CAPACITY:

As with other temporary silos, the size of the baled straw silo should be determined by the herd of livestock to which the silage will be fed. See pages 7 and 9.

CONSTRUCTION AND FILLING:

Constructing and filling the baled straw silo does not require special skill or involve difficult operations, but does demand careful work and attention to every detail. The step-by-step procedure is given below:

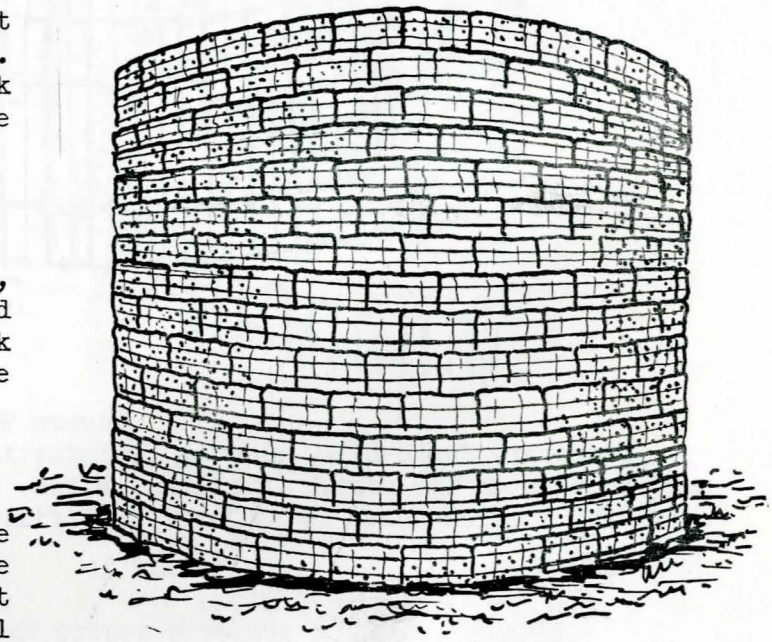

Figure 10
Straw bale silo. Note how bales are laid up in brick fashion.

1. Lay Out a Circle:

Drive a stake in the ground at the point where the center of the silo is to be. Fasten a wire or heavy cord to this stake and with the other end lay out a circle having a diameter equal to the inside diameter of the silo.

2. Level the Ground:

Level an area of ground slightly larger than the outside diameter. Check the leveling with a carpenter's level - don't rely on the "eye".

3. Select the Bales:

Do not use small, soft, or odd-shaped bales. If straw is baled for this purpose one wire on the bale should be a little longer than the other so that the ends of the bales will fit together better.

4. Build the Silo:

Set the first ring of bales flat on the ground with the inside edge just outside the marked circle. Two hoops of No. 9 wire are used to hold the bales together. The wire for each hoop should be the same length. Place the upper hoop about 1/3 the distance down the width of the bale and the lower hoop about 2/3 the distance (Fig. 11). There are several methods used in tightening the wire. One method is the use of tightening tools like that shown in Figure 12. The ends of the wire are threaded through the holes and bent. The hoop is tightened by turning the handle. Use one of these tools on each hoop and tighten both at the same time, prying the bales in toward the center with a bar. When the hoops are tight, the wire is slipped off the end of the pipe and twisted together. Each succeeding ring of bales is tightened in a similar manner. The ends of the bales should be over the center of the bales in the ring below. Make certain the inside wall is straight up and down by using a carpenter's level.

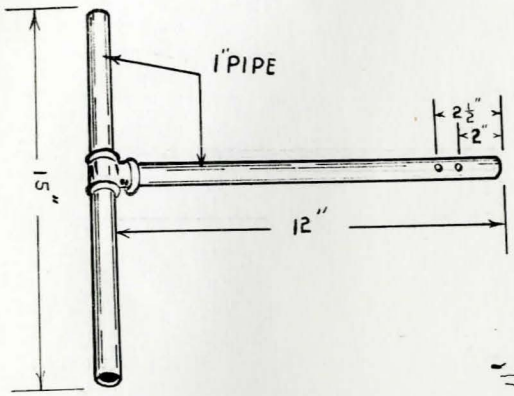

Figure 12
Wire tightening tool that can be made at home.

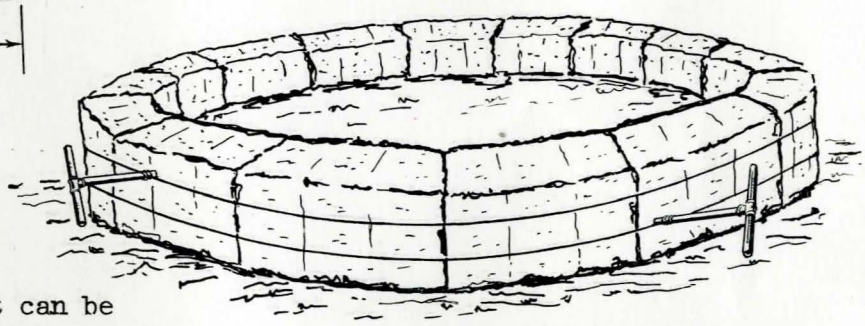

Figure 11
One method of tightening the wire hoops. Both wires must be tightened at the same time.

5. Fill the First Section:

Several rows of bales may be built up before starting to fill the silo.

The discharge pipe of the filler should be adjusted so that the silage is delivered to the center of the silo. Work the silage evenly towards the edge. Keep it well packed by continual tramping. The center should be kept a few inches higher than the edge. Continue filling to within a foot of the top of the top ring of bales.

6. Add and Fill Additional Sections:

Continue adding and filling sections (see steps 4 and 5) in the same manner, until a height equal to the diameter of the silo is reached.

7. Cover the Silo:

Cover the top of the silage with about 5 inches of moist dirt. Some farmers use waterproof paper fastened down with woven wire weighted at the edge to cover this type of silo.

8. Feeding the Silage:

Remove the covering and any spoiled silage. Then remove the silage from the top surface. A slice one foot in depth should be fed every 3 or 4 days. In most cases the straw can be fed along with the silage.