University of Nebraska - Lincoln
DigitalCommons@University of Nebraska - Lincoln

Historical Materials from University of Nebraska-Lincoln Extension

Extension

8-1938

EC764 Special Machinery for Moisture Conservation

H. J. Stockwell

Follow this and additional works at: https://digitalcommons.unl.edu/extensionhist

Stockwell, H. J., "EC764 Special Machinery for Moisture Conservation" (1938). *Historical Materials from University of Nebraska-Lincoln Extension*. 2280.
https://digitalcommons.unl.edu/extensionhist/2280

This Article is brought to you for free and open access by the Extension at DigitalCommons@University of Nebraska - Lincoln. It has been accepted for inclusion in Historical Materials from University of Nebraska-Lincoln Extension by an authorized administrator of DigitalCommons@University of Nebraska - Lincoln.

AGRI
S
185
E7
#764
E.C. #764
LIBRARY
COLLEGE OF AGRICULTURE
RECEIVED
MAY 27 1971
COLLEGE OF AGRICULTURE
LIBRARY

Aug. 1938

Nebraska
COOPERATIVE EXTENSION WORK
IN AGRICULTURE AND HOME ECONOMICS
U. of N. Agr. College & U. S. Dept. of Agr. Cooperating
W. H. Brokaw, Director, Lincoln

Ext. Circ. 764

SPECIAL MACHINERY FOR MOISTURE CONSERVATION

by

H. J. Stockwell

Purpose of Circular

The purpose of this circular is to describe the use of the basin lister, chisels and other equipment designed to conserve moisture and check soil erosion. The equipment that is available from the major manufacturers of farm equipment is listed along with recommendations as to its use. These recommendations are taken from the manufacturers and experiences of farmers that have used the equipment being discussed.

Many pieces of tillage equipment available from competing manufacturers are designed to accomplish the same purpose. There is no deliberate intent of comparing the relative worth of any piece of equipment. The intention of this circular is to place the information before farmers that such equipment is available and something as to what he can expect from its proper use.

Convenience.

During the drought of the past few years in the Great Plains areas, the necessity of conserving moisture has become a dominant factor in crop production. Two moisture conserving methods that have developed largely during this recent period have been contour tillage and approximate contour tillage along with the basin former, basin lister or damming attachment as the case may be. The basin lister, as all these devices are commonly called, can do a lot to eliminate the inconveniences of a lot of short rows, difficult turning and the probable breaks in low spots usually present in a field that is satisfactorily contour tilled. The purpose of the basin lister is to improve contour tillage by the above methods rather than to replace it.

Since all basin listing equipment is simple, relatively cheap, and valuable in conserving moisture if properly used, it has done a lot to bring attention to other methods to the average farmer, when the value of moisture conservation and erosion control was recognized. Basin listing is just the addition of another piece of equipment when the planning of contour tillage, strip cropping, terracing and gully control work on the farm seemed too complicated and too much work or was just simply postponed.

c.1

Draft Requirements.

Experiments have indicated that the basin lister will require an additional 15% to 35% of the original load of the lister or chisel. This percentage depends largely on the design and adjustment of the attachment. Generally, the rotating paddle type of attachment takes less power than the type that lifts when dumping the accumulated dirt.

General Recommendations.

There are two principles involved in the use of the basin lister that are outstanding.

(1) Do not expect basins to hold on slopes in excess of two or three per cent.

(2) Keep the basins effective over as large a percentage of time during the year as possible without interfering seriously with seeding and cultivation.

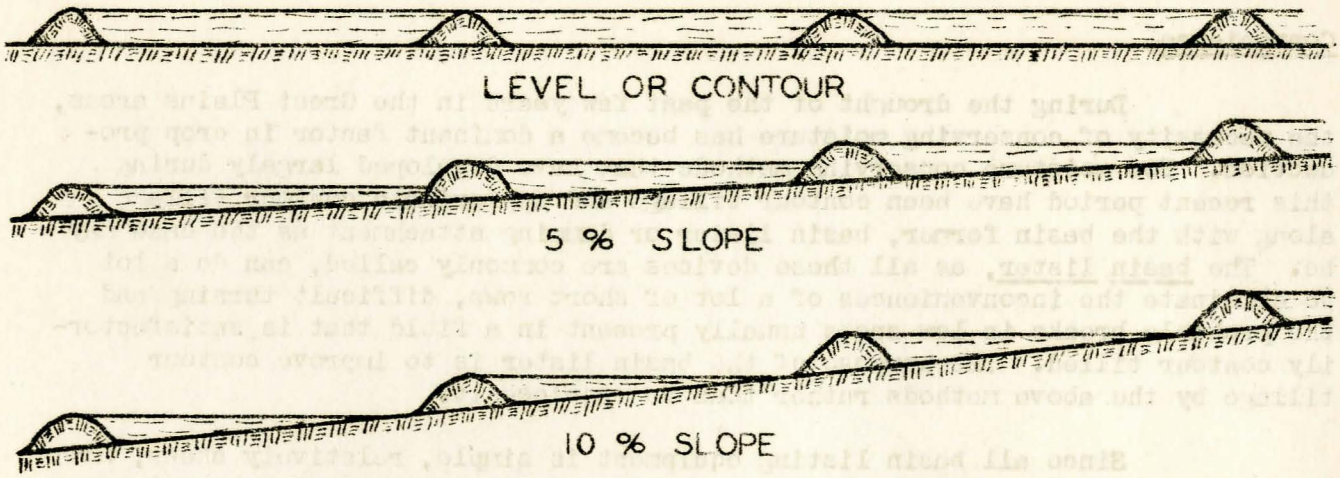

Figure No. 1 - Relative Capacity of well-formed Basins.

19705

The first principle involves the capacity of the furrow which decreases as the slope increases; also, the likelihood of defective dams which may break putting an excessive load on the dams below with the attendant loss of soil.

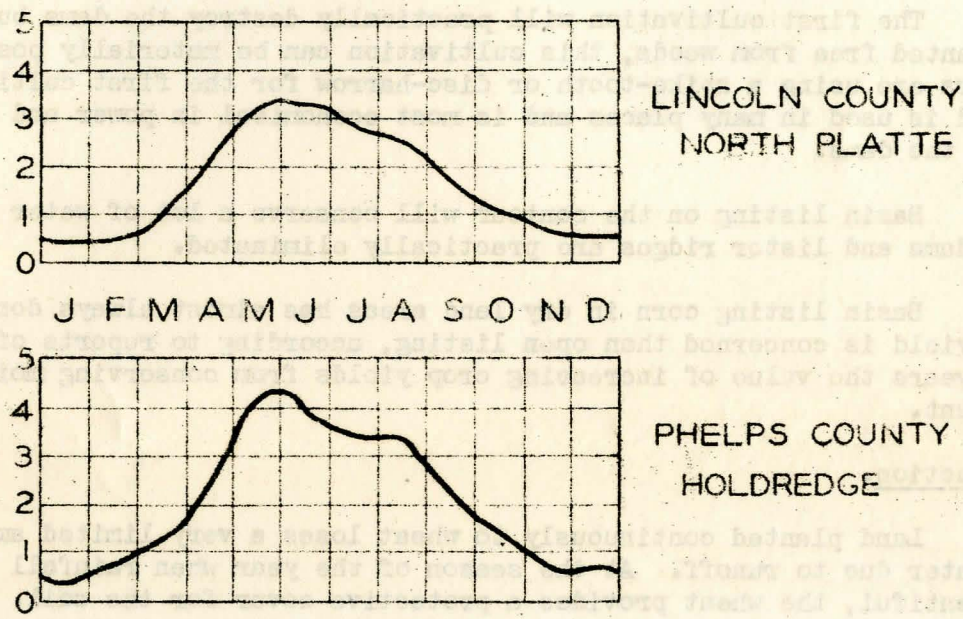

Figure No. 2 - Mean Monthly Rainfall in Inches at North Platte & Holdrege.

Note that the heavy rainfall precedes the heavy demand from crops. Moisture conservation should receive special attention during heavy rainfall periods.

The second principle involves the fact that rainfall is likely to come at any time and much Nebraska rainfall comes before any crop is planted or before clean tillage is commenced. The basins should be on the field at all possible times to conserve the rainfall and hold the soil in place. Especially is it important in early spring when rainfall is more plentiful.

THE BASIN LISTER IN TILLAGE OPERATIONS

Row Crop Production.

If row crops succeed small grain or summer fallow, it is well to basin list the land as soon after harvest as practicable so as to conserve fall rains.

19705

Then in the winter these basins will hold the snow and conserve the melting snow which many times would be completely lost due to runoff from frozen ground. Usually it will not be necessary to re-list and dam the land in the spring but it can be done.

When planting time arrives, the ridges may be worked down with a lister cultivator (go-devil), thus cleaning the field from weeds and making an ideal seed-bed, especially for sorghums. If the row crop follows a row crop, the damming should be done at the earliest opportunity in the spring.

The first cultivation will practically destroy the dams but if the crop is planted free from weeds, this cultivation can be materially postponed. Many farmers are using a spike-tooth or disc-harrow for the first cultivation. This method is used in many places and is most economical in power and time and also saves the dams.

Basin listing on the contour will conserve a lot of water even after the dams and lister ridges are practically eliminated.

Basin listing corn in dry land areas has almost always done better as far as yield is concerned than open listing, according to reports of farmers. In normal years the value of increasing crop yields from conserving moisture is more apparent.

Wheat Production.

Land planted continuously to wheat loses a very limited amount of soil and water due to runoff. At the season of the year when rainfall is usually plentiful, the wheat provides a protective cover for the soil. Therefore, the use of tillage machinery for moisture conservation is limited in the case of wheat production.

A few farmers who have basin listers list their land after harvest instead of plowing and start working the land down about a month later in preparation for seeding. The success of this method is not definitely determined since it has been so limited in its use.

The small basin formers or so-called pox markers which are attached behind moldboard plows, the one-way, rod-weeders, discs and other tillage equipment will be popular especially where there is also some summer fallow on the farm. These machines have a light draft and operate in a manner so as to form small basins immediately behind the tillage tool that is doing the main operation. Usually there is not much advantage in operating this equipment on the contour since the water storage is in round holes. The holes are about the same depth, or slightly deeper, as the penetration of the tillage tool that it follows. The amount of water stored, therefore, depends a lot on how deep the soil is tilled. Generally these small holes are effective in holding all the rainfall but weathering rapidly decreases their capacity. The capacity of the holes is greatest on level land and decreases materially with increased slope. Direction of operation has no effect on the storage capacity of the basins.

19705

If the field to be planted to wheat is free of weeds, the wheat may be drilled over the surface that has been pox-marked. This will leave a limited amount of protection throughout the year and possibly all that is necessary. There has been some objection to this practice in that it may make the surface rough for harvesting machinery, making for some discomfort for the operator.

Summer Fallow.

The principle of the basin lister was first used to design a machine that would make a basin to store all the water that falls on summer fallow land. Here we have an entirely different proposition than in wheat since the land is exposed to runoff, soil loss and evaporation for a long period during the year. Soil losses on smooth, bare fallow are usually greater than on any other crop condition. The value of keeping the basin on the land a large percentage of time is especially important in the case of summer fallow. Many farmers who have summer fallowed only in the past few years have applied only enough of these conserving practices to get under the requirements of the Agricultural Conservation Program. Others who have had more experience realize the benefit of making every effort to conserve water to increase crop yields.

There is a wide variety of machinery and methods in use for summer fallow. The first method used was to use the basin lister in the spring and either work down the ridges with the lister cultivator and other similar implement or repeat the basin listing operation by splitting lister ridges.

The second type of machine to be designed and used might be called the chisel-dammer. These machines are designed to penetrate the ground like a chisel from six to twelve inches deep on about a 20" to 30" spacing. Attached behind the chisel is a damming attachment. As soon as the weeds start to grow, the operation may be repeated by splitting the ridges and re-damming. These machines have been further developed to include seeding attachments of various types which have apparently been successful if used according to the recommendation of the manufacturers.

Since the machines of the second type represented quite an investment when cash was scarce, there was a demand for a cheaper machine that could be satisfactorily used with equipment that the farmer already owned. In the past year, there have been developed a few machines that made holes or pox marks behind tillage tools such as plows and one-way discs as described under wheat production. Although there is little actual data on this type of equipment at the present time, there seems to be no reason why it should not be successful. However, in dry seasons the excessive use of disc tools on summer fallow along with this equipment may lead to pulverizing the soil and a wind erosion hazard. In other words, cultivating the top few inches of the soil should be combined with deep tillage occasionally in order to bring clods to the surface. The danger can be recognized if the cultivation fails to leave a rough, cloddy surface.

19705

AVAILABLE EQUIPMENT[1]

John Deere.

The John Deere Plow Company of Moline, Illinois has two general types of basin forming attachments. One is designed to follow a regular lister, forming dams in the lister furrow. It trips by means of a pressure trip which raises the clutch holding the paddle when sufficient soil accumulates. It is very similar to the attachment illustrated as part of the chisel-damming machine in all respects except that it is somewhat larger and heavier for use in the wider lister furrow. It is generally used in basin listing for row crops and summer fallow. It is sold in individual units and may be attached to any exposed beam or integral type of lister.

The other type of basin attachment manufactured by John Deere is commonly called the Peacock machine. A general side view of this machine is illustrated.

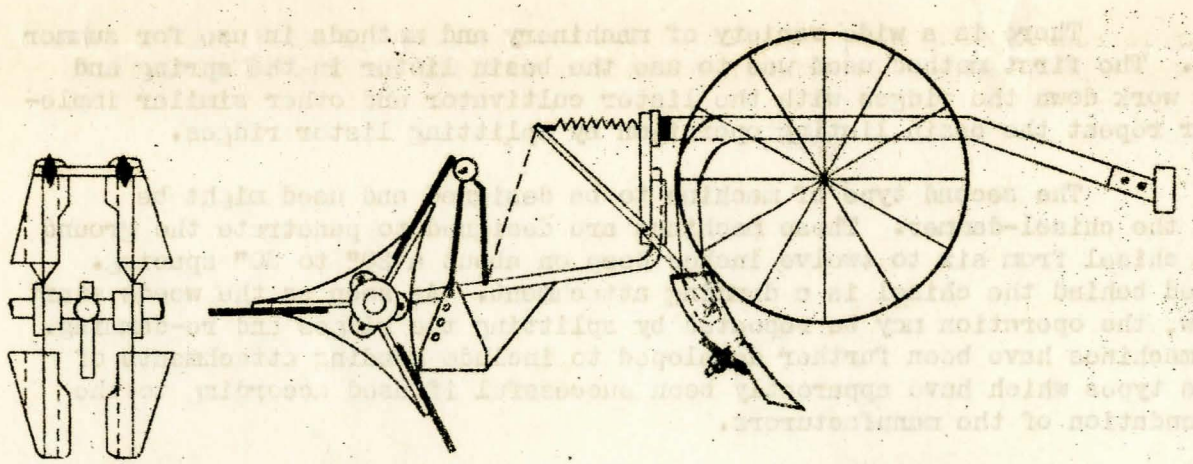

Figure No. 3 - One Unit of John Deere Peacock Machine.

It is designed to act as a light chisel with its four or six inch shovel which goes into the ground from 6 to 12 inches on 20-inch spacings. The damming attachment follows in line with these chisels forming the dams. It was originally sold in five row units and was similar to the three-row tractor lister equipped with shovels instead of lister moldboards, with two additional

1. The sketches of various types of basin listing equipment are not shown in detail of construction or to scale. They merely show the working principles of the machine.

moldboard beams and damming equipment. More recently a four-row unit has been developed to fit more nearly with power units available on the average farm. It can be used as a wheat tillage implement since it is adapted to summer fallow, seedbed preparation and seeding. When seeding is done, the damming attachments are removed and a seeding attachment with accessories is added. A broader shovel is placed on the beam. The wheat is then seeded in double rows, one on each side of the furrow made with the shovel. It is generally recommended that a rod weeder be used in final seedbed preparation.

This machine may be equipped with duckfoot sweep for bindweed eradication.

Both types have a power lift that acts on both the tillage and basin forming equipment. Provision is made for all necessary adjustments.

Dempster.

The Dempster Mill Manufacturing Company, Beatrice, Nebraska, has two types of basin lister equipment. One is designed primarily for damming lister furrows and the other for a wheat production machine. The lister furrow dammer is sold in two and three row units. The spacing of the dams is determined mechanically by a cam trip driven by a chain from the wheel supporting the dammer. The damming attachment is connected so that it raises when the lister is raised with the power lift. The depth of the dams is determined by an adjustment of a pressure spring on this connecting device. It is manufactured to attach to all Dempster listers but the serial number of the lister must be known.

The Dempster tilling, damming, deep furrow, seeding machine is a four-row machine covering a width of 98" in the standard model. As indicated by the sketch, a front row of shovels consists of three 16-inch duckfoot sweeps followed by four 9-inch standard lister bottoms which are located half way between the duckfoot sweeps.

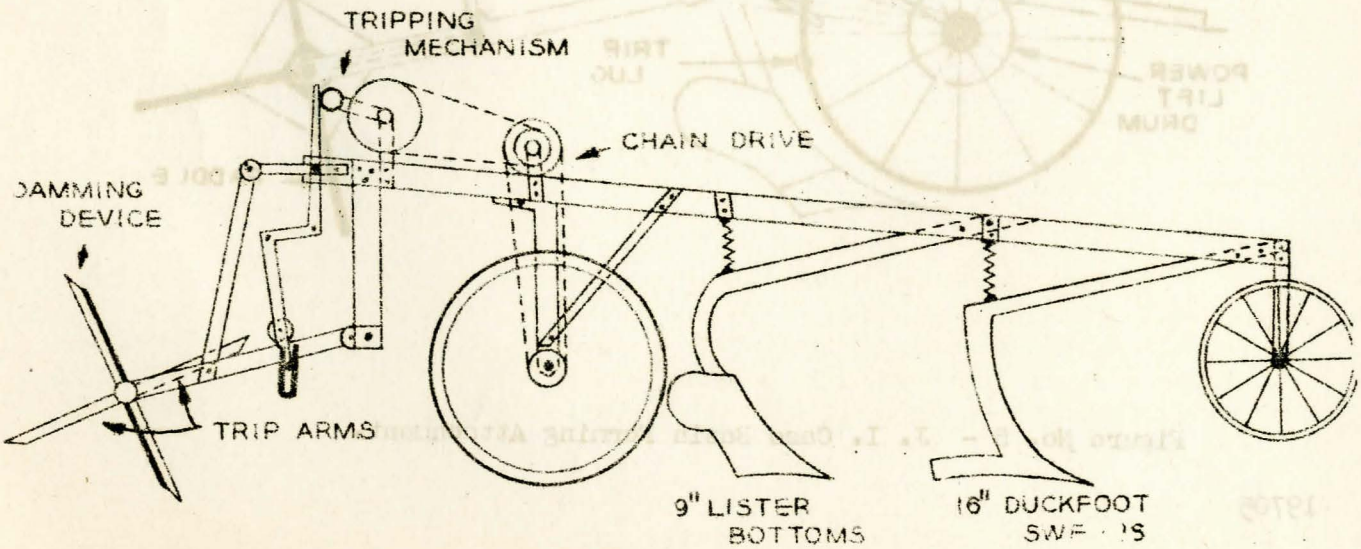

Figure No. 4 - The Dempster Damming, Tilling and Seeding Machine.

The damming paddles are located in line with the lister bottoms. The paddles are tripped all at the same time by means of a cam driven by a chain drive from the drive wheel. More recent models have an individual cam for each paddle which trips each one successively every quarter-revolution. The spacing of dams is controlled by the number of cogs in the drive sprocket.

In summer fallow work, the ridges may be split and new dams made as necessary to control weed growth. In the final operation before seeding, the damming attachment, lister bottoms, and the front rows of duckfoot shovels are removed. The lister bottoms are replaced by duckfoot sweeps on the rear shanks.

At seeding time, a seed box is added with the necessary driving mechanism and 9-inch furrow openers are placed on all seven shanks. The seeding attachment is designed to spread seed evenly over the bottom of the furrow left by the opener.

With a few adjustments as to shovel attachment and rate of seeding sorghum may be seeded with this equipment.

J. I. Case.

The J. I. Case Company, Racine, Wisconsin, manufactures a basin forming attachment to be attached to their own tractor listing equipment.

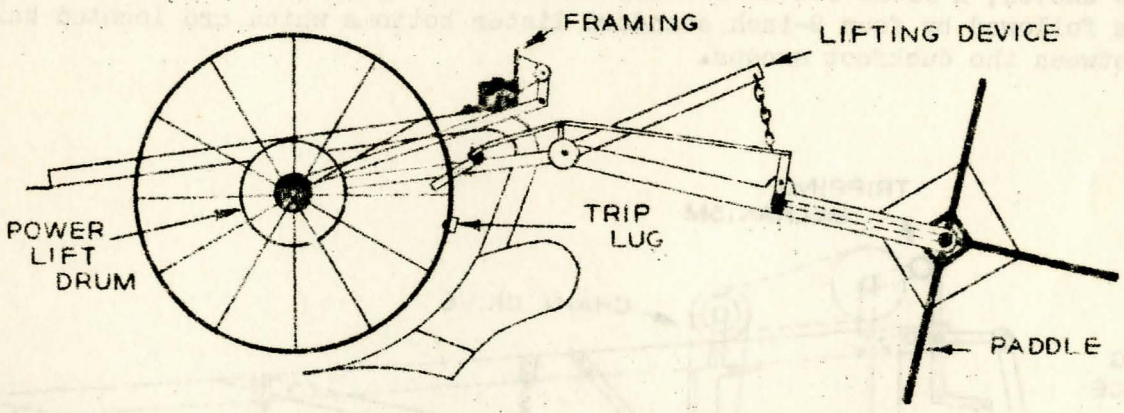

Figure No. 5 - J. I. Case Basin Forming Attachment.

It would be rather difficult to use this attachment on any other type of lister but it could be attached, with the addition of fitting parts, to a lister of similar design. The spacing of the dams depends on the number of lugs on the lister wheel which trips the round bar that holds the paddles while the dirt is being accumulated. The unit is very compact and raised along with the lister by power lift. It is available in two- and three-row units.

International Harvester Co.

The International Harvester Company, Chicago, Illinois, has one type of basin listing attachment that attaches to almost any type of lister. It may be used in connection with a lister for row crop seed bed preparation or planting on summer fallow. This device was the first commercial type of basin forming attachment and carries the simple design of many of the experimental and home-made types.

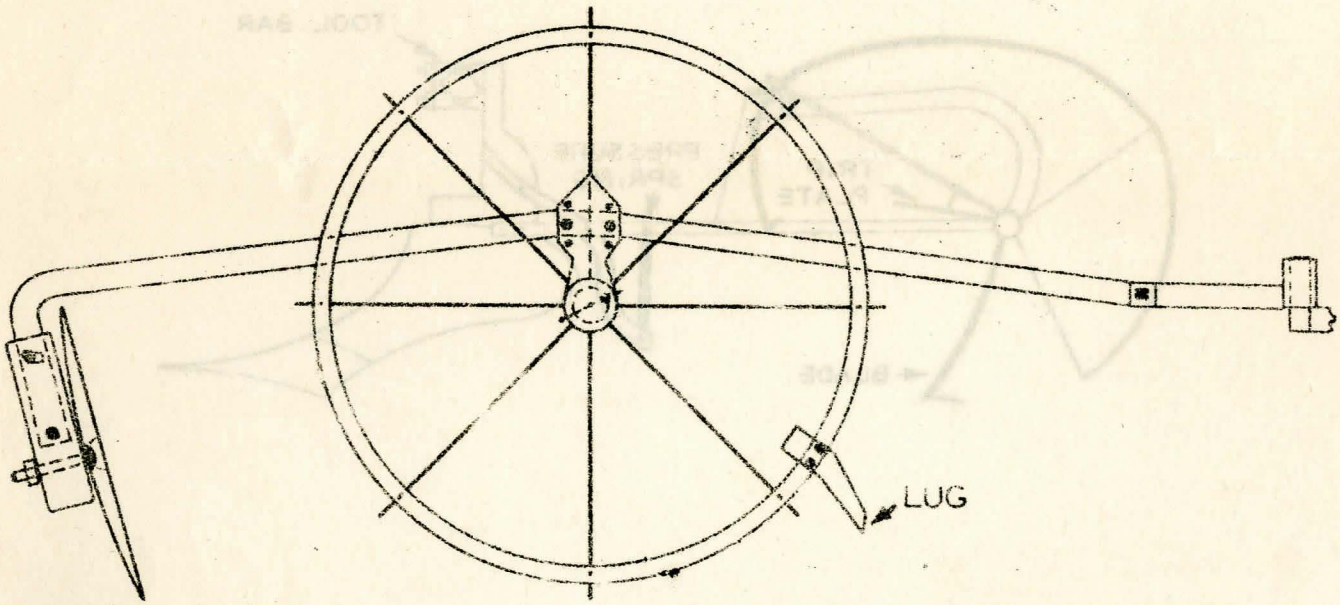

Figure No. 6 - International Harvester Lister-Darner.

As shown in the sketch, it consists of a carrying wheel, a draft bar and a disc for accumulating dirt. The spacing of the dams depends on the number of lugs on the wheel. There are three adjustments on the amount of dirt accumulated. One is at the point where it attaches to the lister, another immediately above the axle on the wheel and there is a few inches

adjustment on the disc in relation to the draft bar. These adjustments are all necessary due to the wide variety of listers on which it may be used.

It has no connection with the lister lifting device but it is provided with a transport wheel that is placed under the disc to be used when moved a long distance.

Minneapolis-Moline.

The Minneapolis Moline Plow Company, Minneapolis, Minnesota, manufactures two basin forming attachments designed for use with their uni-tiller equipment. However, by drilling holes in the lister beam and shaping some strap iron, it can be attached to almost any exposed beam type of lister tillage tool.

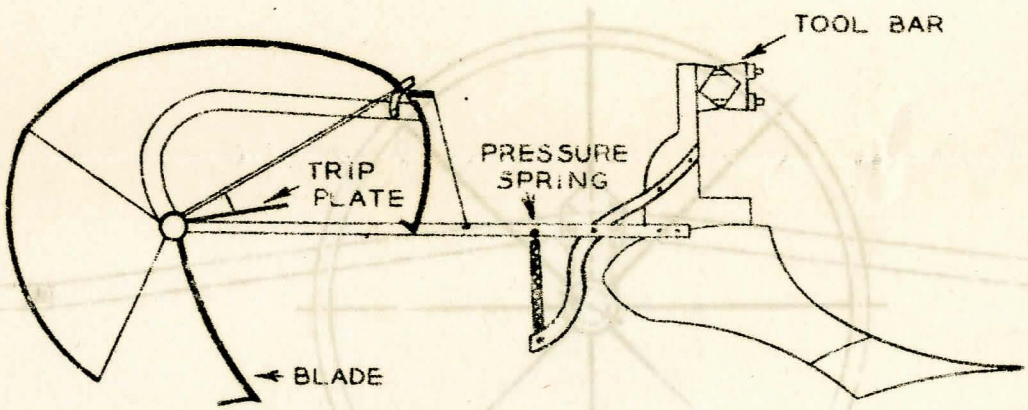

Figure No. 7 - Minneapolis-Moline Lister Dammer.

The dammers are very similar in design, the difference being in their size. One is made to follow the regular size high speed lister bottom while the other is designed to follow a smaller 10" lister bottom. The large dammer is normally used for planting row crops or with the lister on summer fallow. The small dammer is used on the uni-tiller equipment behind a series of small lister bottoms and duckfoot sweeps for summer fallow work.

The spacing of the dams is determined by the pressure on the spring connecting the trip plate and the trip arm. There is no adjustment of the height but the amount of compaction is regulated somewhat by the same spring. It is tripped by pressure of the accumulated soil on the trip plate. The damming attachment is considered as a part of the uni-tiller attachments.

Chase.

The Chase Plow Company, Lincoln, Nebraska, manufactures a basin forming attachment for use behind listers of any design. It operates entirely independent of the lister and just trails behind as an additional piece of equipment. A proper hitch to the lister must be provided.

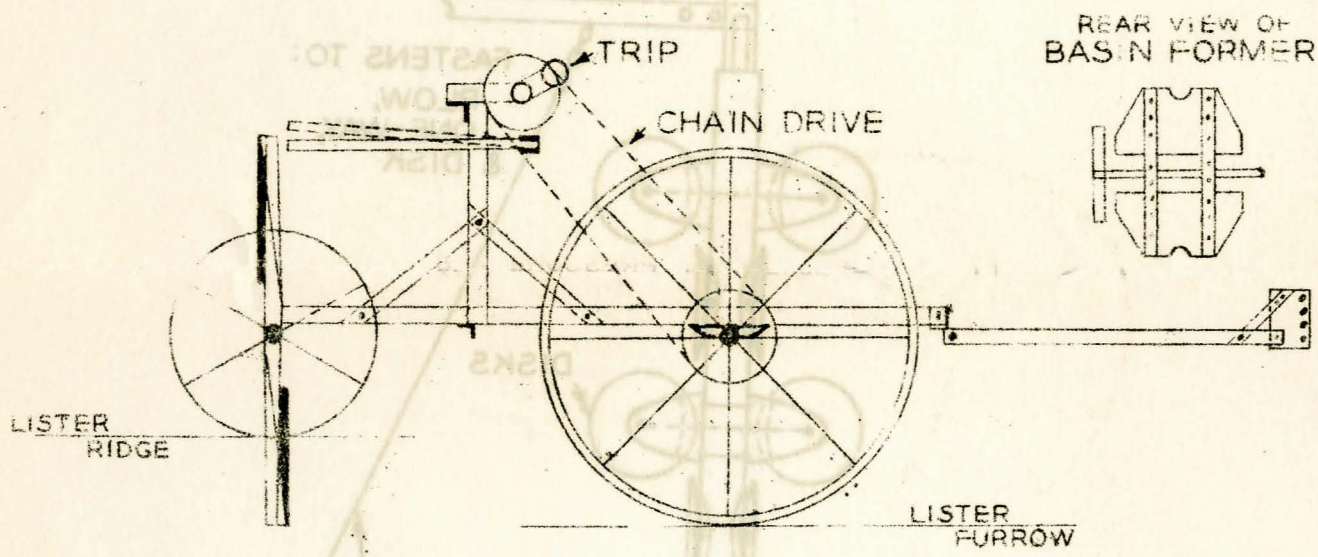

Figure No. 8 - The Chase Basin Forming Attachment.

The attachment is sold in either two- or three-row units. The spacing of the dams is determined by the number of teeth in the sprocket that is driven from the large wheel supporting the attachment. The actual tripping is done by a cam attached to this sprocket wheel. There is no adjustment as to height except as to the wheels that ride the lister ridges. The height and the uniformity of the dams have been very satisfactory.

Miller Manufacturing Co.

The Miller Manufacturing Company of Stratton, Nebraska, has a machine especially designed for summer fallow work. The draft for this type of equipment is light and can be used behind any disc, one-way, rod-weeder, or plow. The basins are formed by the rotation of the discs around the center. The weight of the machine causes it to penetrate the soil slightly deeper than the tillage tool which it follows. As it rolls over, it spades out a round hole. Therefore, it finds little advantage in contour tillage.

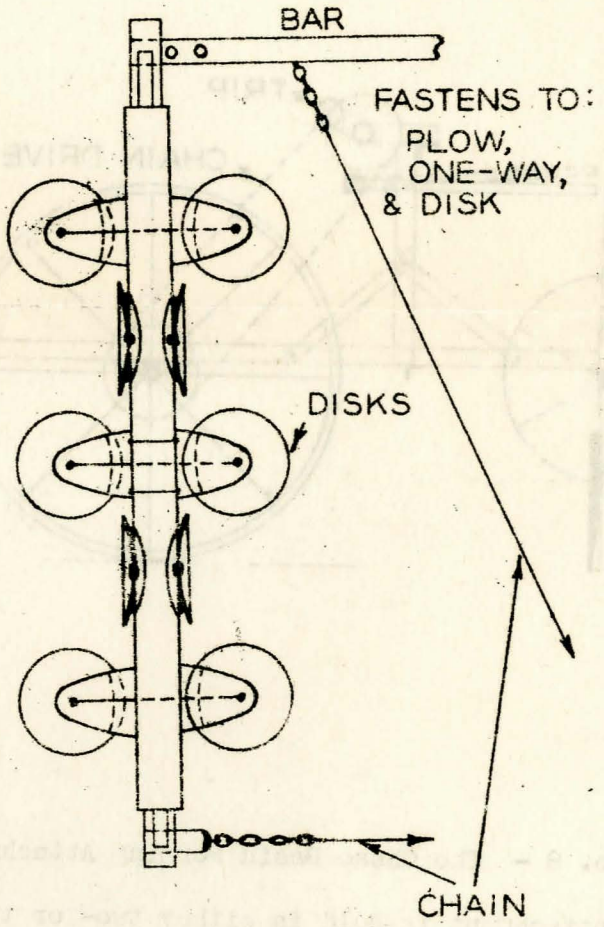

Figure No. 9 - Miller Basin Forming Attachment.

19705

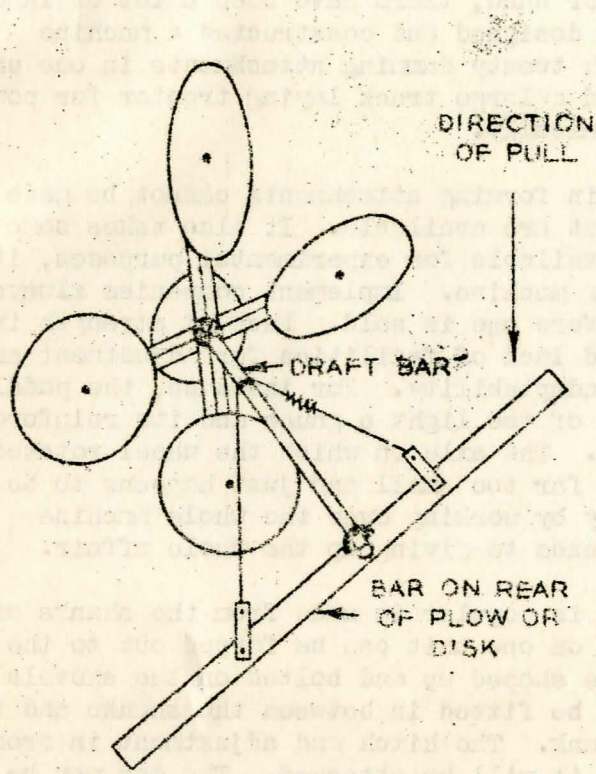

Figure No. 10 - Jayhawk Drought Buster.

Jayhawk Drought Buster.

The F. Wyatt Manufacturing Company of Salina, Kansas, has developed a machine for summer fallow work that follows a plow, one-way, disc or duckfoot. It digs out holes due to the rotation of the four discs set at a definite angle around the draft bar which connects it with the tillage implement. When the "drought buster" is pulled forward it rotates the discs and scoops out a hole at the same time. It may be adjusted as to length of basin by changing the angle between the draft bar with the line of travel. The depth of the basin can be regulated to some degree by reversing the draft bar connection at the hitch to the tillage implement. Contour tillage is of little advantage with this implement but it works most satisfactorily on level ground.

Other Equipment.

There is no doubt there is a great number of other types of basin forming attachments on the market other than the ones described above. In fact, very frequently a patent is issued on some new type of design or an improvement on present designs. However, the above makes that have been described represent the majority of those offered for sale in Nebraska.

The detailed discussion of light chisels has been omitted. Almost every company that manufactures a general farm implement line has a machine that can be used to stir soil to the depth of ten or twelve inches. Duckfoots and listers and special tools can be easily adapted by proper shovels or chisel points. The practice of chiseling cannot be recommended as a good practice under ordinary conditions from the standpoint of crop yield. In the control of wind erosion it has proven valuable.

HOME-MADE EQUIPMENT

Since the basin forming attachments are rather simple and due to poor economic conditions, a number of farmers have made their own with material from the scrap iron pile. Some of those have been very successful, while some

have proven unsatisfactory in practice. A lot of these machines have found their way back to the scrap heap. On the other hand, there have been a lot of ingenious devices. For instance, one farmer designed and constructed a machine similar to the John Deere "Peacock" with twenty damming attachments in one unit, twenty inches on centers. This required a large track laying tractor for power but it covered his acres fast and economically.

There is no reason why basin forming attachments cannot be made at home if the necessary parts and equipment are available. It also takes some degree of ingenuity. Unless money is available for experimental purposes, it should be built similar to some existing machine. Implement companies always build a lot of experimental machines before one is sold. Lack of strength in various parts, poor bearing surfaces and lack of facilities for adjustment are reasons for a lot of failures and poor adaptability. For instance, the paddle or disc, as the case may be, is usually of too light a gauge and its reinforcing or support is inadequate or missing. The axle on which the wheel rotates is a light bolt or a round bar which is far too small and just happens to be available. Adjustments are made usually by working over the whole machine which becomes tiresome and many times leads to giving up the whole affair.

One home-made device which is popular is made from the shanks of an old corn cultivator. The two shanks on one unit can be forged out to the same length. An old one-way disc can be shaped up and bolted on the shovels with U-bolts. The cultivator wheel may be fitted in between the shanks and the cut-off axle bolted or welded to the shank. The hitch and adjustment in front must be made to fit the lister to which it will be attached. The dam may be formed by fastening a lug to the wheel so that it will raise once each revolution.

The Hays Agricultural Experiment Station at Hays, Kansas has blueprints of a home-made basin forming attachment which are available at that station.

FUTURE DEVELOPMENT

There are a number of problems or possibilities for future use with regard to the basin lister. Although the draft is not such a large item, it is often enough to cause overload or necessitate a gear change in the tractor. Designs are being studied on machines that will require less draft. The problem of where is the best place to obtain dirt for the dam is still unanswered.

The use of a basin forming attachment between the row crops after cultivation is completed is a possibility especially in areas where erosion is serious and should be studied. A few companies and Experiment Stations are already working on this problem.

19705