University of Nebraska - Lincoln
DigitalCommons@University of Nebraska - Lincoln

Historical Materials from University of Nebraska-Lincoln Extension

Extension

2-1949

EC784 Revised 1949 Electric Pig Brooders

R. L. DeRose

Follow this and additional works at: https://digitalcommons.unl.edu/extensionhist

DeRose, R. L., "EC784 Revised 1949 Electric Pig Brooders" (1949). *Historical Materials from University of Nebraska-Lincoln Extension*. 2274.
https://digitalcommons.unl.edu/extensionhist/2274

This Article is brought to you for free and open access by the Extension at DigitalCommons@University of Nebraska - Lincoln. It has been accepted for inclusion in Historical Materials from University of Nebraska-Lincoln Extension by an authorized administrator of DigitalCommons@University of Nebraska - Lincoln.

1 AGRI
S
85
E7
#784
E.C #784
COLLEGE OF A.G.
LIBRARY
LINCOLN, NEBRASKA

E.C.784

REVISED
FEB. 1949

ELECTRIC PIG BROODERS

RECEIVED
MAY 27 19
COLLEGE OF AGRICULTURE
LIBRARY

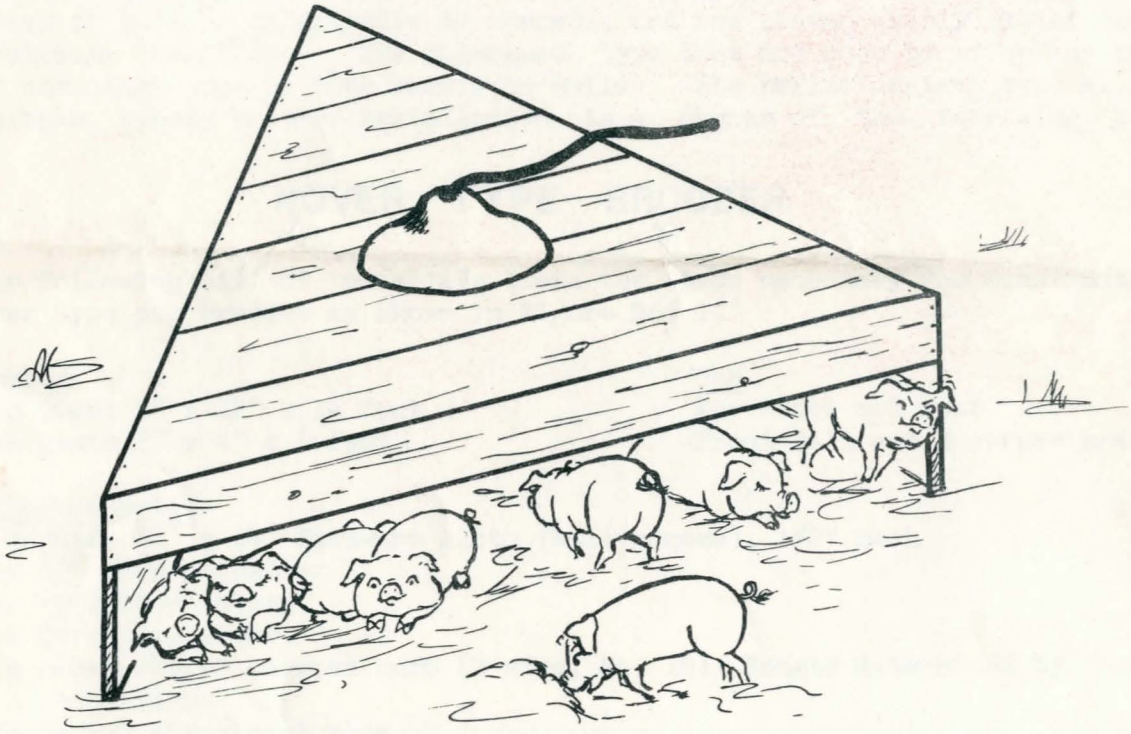

COOPERATIVE EXTENSION WORK IN AGRICULTURE AND HOME ECONOMICS
UNIVERSITY OF NEBRASKA COLLEGE OF AGRICULTURE, AND THE UNITED STATES
DEPARTMENT OF AGRICULTURE COOPERATING, H.G. GOULD, ACTING DIRECTOR
LINCOLN

c.1

ELECTRIC PIG BROODERS

R. L. DeRose
Extension Farm
Electrification Specialist

Experiments have shown that in early spring farrowing, the most serious losses of young pigs occur during the first few days after the pigs are born. These losses are often due either directly or indirectly to chilling. At farrowing time the pigs are small and inactive, and sensitive to low temperatures. In trying to obtain warmth, young pigs lie next to the sow and are often trampled or lain upon. Therefore, a source of warmth other than that supplied by the mother will prevent many deaths. The hover type pig brooder can reduce young pig losses.

There are three general types of pig brooders: the hover, underheat, and the reflector-lamp type. This circular deals largely with the hover type since it is easy to build, inexpensive to operate, and has proven widely satisfactory under Nebraska conditions. The underheat type does not seem to offer any particular advantage and is more costly to build. The reflector-lamp type allows for a simple, speedy brooder installation in a corner of the farrowing pen.

HOVER TYPE BROODER

The following bill of materials lists the items necessary for constructing the hover type pig brooder as shown in Figure No. 1.

Lumber	Use
One piece 1" x 12" x 14 feet	For sides and roof
One piece 2" x 4" x 8 feet	Front rail and 3 corner braces

Other Material

One piece 14" x 14" Hardware cloth (hail screen), 1/2" mesh
One 12" deep reflector
One reflector holder
One porcelain socket
One piece rubber covered cord (2 wire, No. 16) length determined by local conditions
One rubber attachment plug
One 150 watt incandescent lamp (other sizes optional)
$\frac{1}{2}$ lb. 8 penny common cement coated nails
$\frac{1}{4}$ lb. 6 penny common cement coated nails
Asbestos packing - enough to pack around the reflector rim at the opening

---

Acknowledgement is hereby made to F. D. Yung, Research Agricultural Engineer, and Dr. L. E. Hanson, Associate Professor of Animal Husbandry, Nebraska College of Agriculture, Lincoln, for suggestions and assistance in the preparation of this circular and to E. A. Olson, Extension Agricultural Engineer, the previous author.

CONSTRUCTION HINTS

The brooder is made in the shape of a 90° triangle so that it can be set in the corner of the farrowing pen. The sides are made from the 1" x 12" material and should be cut to the length as indicated in Figure No. 1. The roof and 2 strips of 1" x 2" material can be made from the 1" x 12" board. The 1" x 2" material is used for holding the hardware cloth or hail screen in place under the reflector opening. The 2" x 4" material is cut to the length as indicated in Figure No. 1 for the front rail or guard. Be sure that the inside corner of the frame is square before marking the 2" x 4" for cutting on the front guard rail. It may be necessary to nail temporary braces across the frame to hold it square. The three 2" x 2" braces shown in the corners are obtained by ripping the remaining length of 2" x 4" material. These braces help to prevent the 1" x 12" sides from warping. Cut the reflector opening as near as possible to the exact size of the reflector so that it will easily slip through the opening and rest on the hardware cloth below. Place asbestos packing around the reflector rim at the opening to conserve as much heat as possible within the brooder.

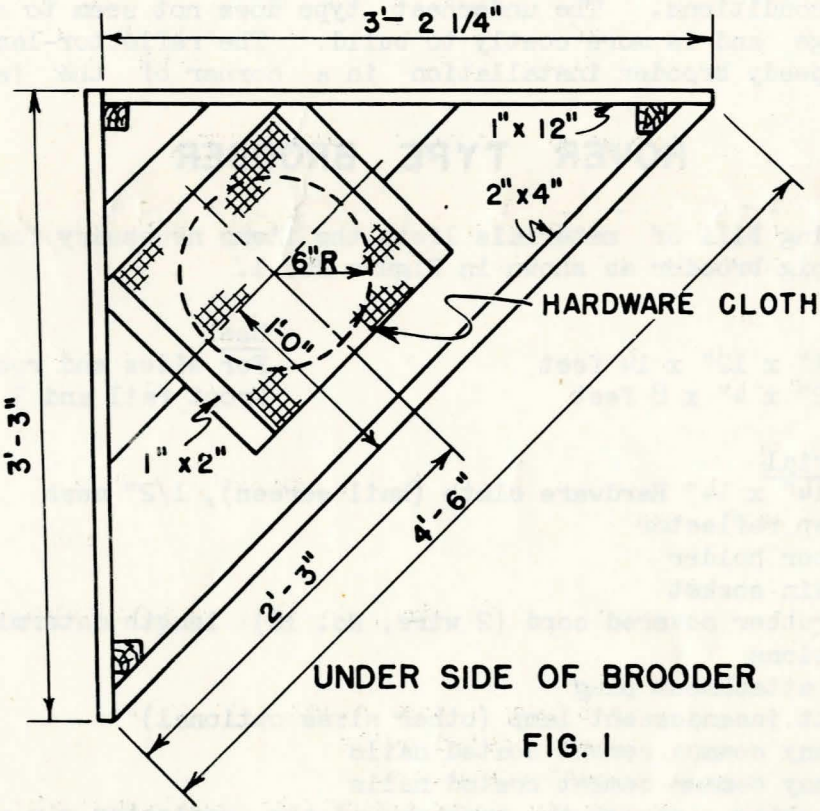

FIG. 1

After the hardware cloth and the two strips of 1" x 2" material are nailed into position, the brooder should be painted. If aluminum paint is available, it should be used for the inside because of its heat reflecting qualities. If paint is not used, two coats of linseed oil should be applied.

After the brooder has been constructed, the reflector unit should be assembled. Do not substitute for the porcelain socket, as this type will help to eliminate the danger of "shock". The length of rubber covered cord will be governed by local conditions. This cord should be of ample length and kept out of reach of farm animals.

USING THE BROODER

After the farrowing pen has been thoroughly cleaned, the brooder should be installed in a corner, preferably an inside corner. NAIL OR ANCHOR THE BROODER SECURELY IN PLACE. To prevent the sow from getting on top of the brooder and doing damage, a guard fence should be placed above the brooder as shown in Figure No. 2.

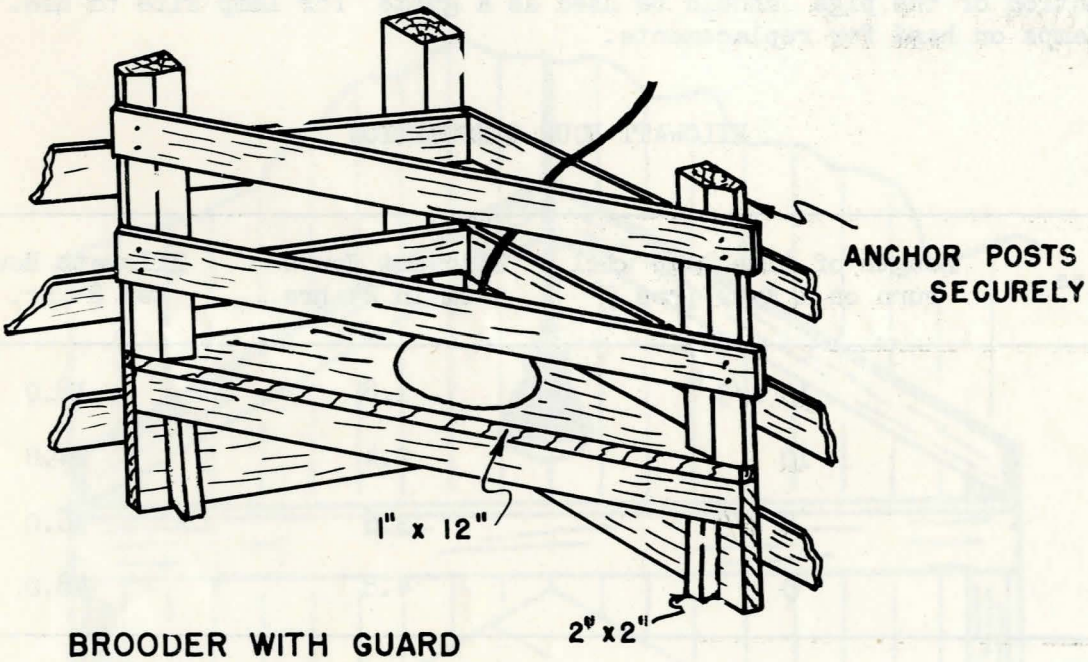

BROODER WITH GUARD FENCE IN PLACE.

FIG. 2

It is usually advisable to place the sow in the pen at least a day or two before farrowing. Young pigs should be repeatedly placed under the brooder by hand until they learn where to go for warmth. The brooder lamp should be left on continuously. It is usually desirable to leave the brooder with the sow and pigs for a period of at least 10 days during the early spring months. Extremely cold weather conditions may require a longer period of time. It may be possible to use the brooder first with one sow and then another. This will not be practical unless farrowing dates are at least 10 days apart.

WIRING

Adequate and proper installation of wiring to the brooders is essential for safety and for satisfactory operation. Under no conditions should a rubber covered cord be laid on the ground to bring electricity to the brooder. If no previous wiring has been installed for pig brooders, it is doubtful if the wiring should be attempted by the farmer himself, unless he has had considerable experience. A competant electrician should be employed for safe and proper wiring.

INCANDESCENT LAMPS

Heat in the brooder is supplied by the lamp. The size used will depend largely on weather conditions. Under normal conditions, a 150-watt lamp can be used satisfactorily; during extremely cold weather, a 200-watt lamp can be used. The reaction of the pigs should be used as a guide for lamp size to use. Have extra lamps on hand for replacements.

KILOWATT-HOUR CONSUMPTION

Lamp Size	Length of time lamp will burn on 1 Kwh. (hrs.)	Kilowatt Hours used in 24 hrs.	Kilowatt Hours in ten 24 hr. days
75	13 1/3	1.8	18.0
100	10	2.4	24.0
150	6 2/3	3.6	36.0
200	5	4.8	48.0

REFLECTOR—LAMP TYPE BROODER

This type of pig brooder can be used without a hover in a corner of the farrowing pen. The heat can be supplied from a number of sources:

(A) Infrared heat lamps - These lamps are available with sealed-in reflectors or for use with external lamp reflectors. In general, heat lamps produce more heat rays than ordinary incandescent lamps and they usually have longer life.

(B) Incandescent lamps - Some of these lamps can be obtained with sealed-in reflectors; however, common 150 or 200-watt lamps can be used in ordinary reflectors.

Some types of lamps are made of heat resistant glass which will not break easily when accidentally splashed with water, however, it is well to protect all lamps from contact with water. Some heat lamps have colored glass to screen out much of the visible light.

All types of lamps, serving as heat sources, should be kept from contact with inflammable material. Safe practice would indicate that lamps with sealed-in reflectors should be kept at least 24 inches from this material. For the most satisfactory brooding results, it is best to vary the height of the lamp according to the warmth requirement of the young pigs.

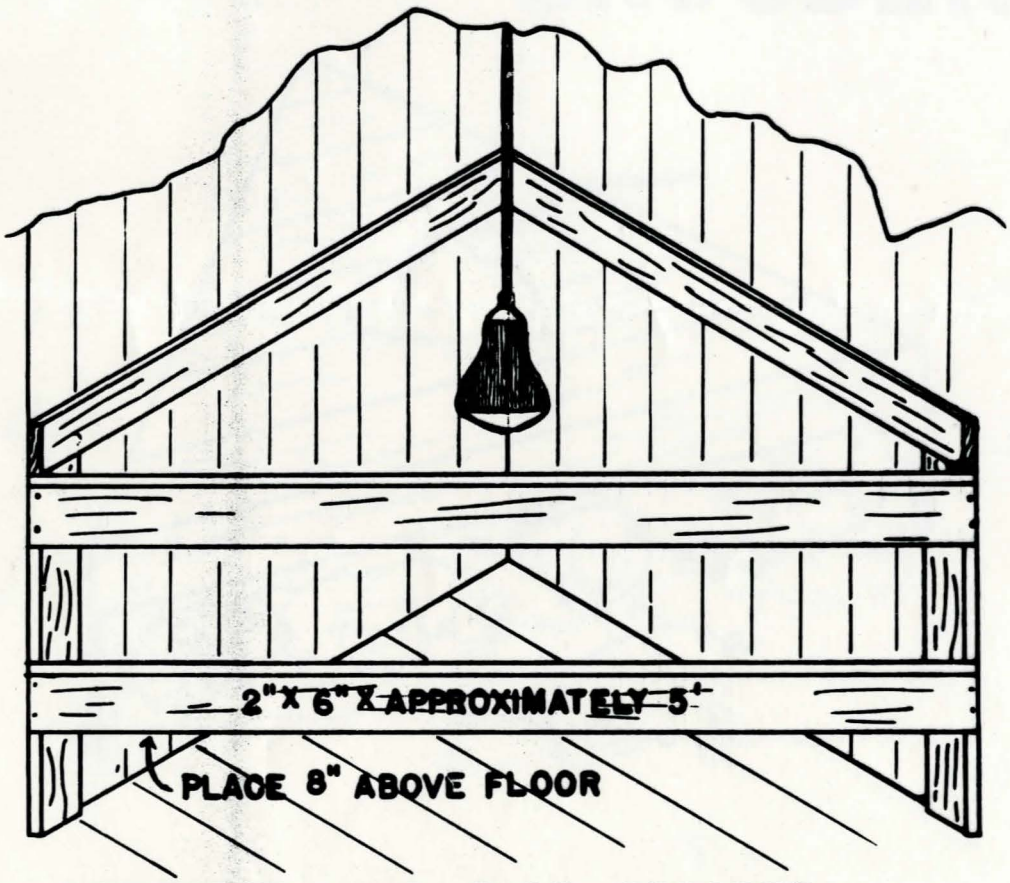

REFLECTOR-LAMP TYPE BROODER
FIG. 3

ELECTRICITY, WHEN PROPERLY USED, IS PERFECTLY SAFE, BUT TREAT IT WITH RESPECT.