University of Nebraska - Lincoln
DigitalCommons@University of Nebraska - Lincoln

Historical Materials from University of Nebraska-Lincoln Extension

Extension

1948

EC788 Home Made Manure Loader

L. F. Larson

R. M. Loper

Follow this and additional works at: https://digitalcommons.unl.edu/extensionhist

Larson, L. F. and Loper, R. M., "EC788 Home Made Manure Loader" (1948). *Historical Materials from University of Nebraska-Lincoln Extension*. 2288.
https://digitalcommons.unl.edu/extensionhist/2288

This Article is brought to you for free and open access by the Extension at DigitalCommons@University of Nebraska - Lincoln. It has been accepted for inclusion in Historical Materials from University of Nebraska-Lincoln Extension by an authorized administrator of DigitalCommons@University of Nebraska - Lincoln.

Nebr A. Un 3/3, 4: 788
AGRI
S
85
E7
#788

Home Made Manure Loader

L. F. Larson and R. M. Loper

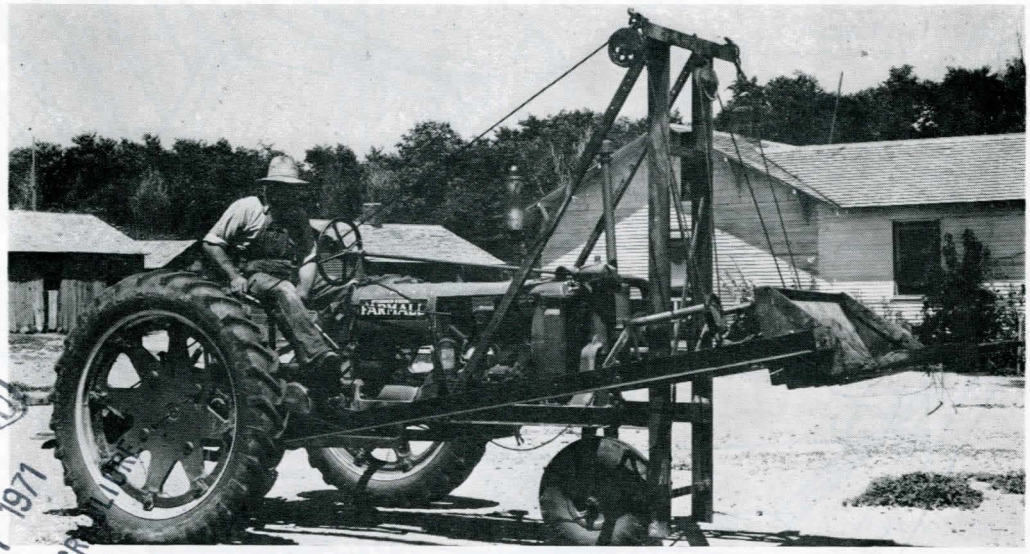

RECEIVED
MAY 27 1971
COLLEGE OF AGRICULTURE
LIBRARY

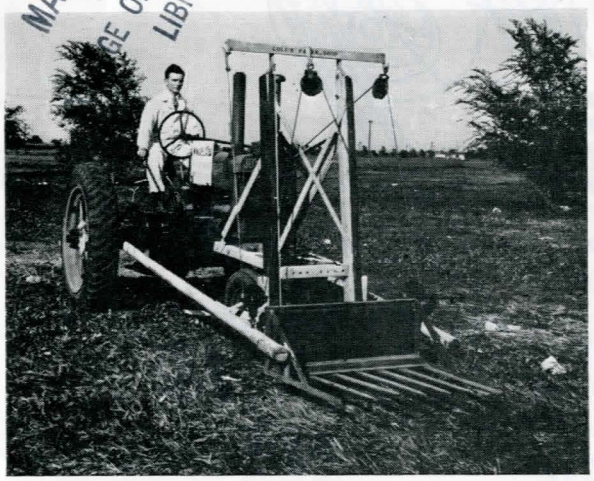

The manure loader is probably one of the greatest labor saving devices on the farm for accomplishing many tedious tasks such as loading manure, cobs or corn; moving dirt, and numerous other jobs.

Nearly all home-made manure loaders have the fork on the front end of the tractor but many differ in the lifting mechanism. Some builders use a belt driven lift, some use a hydraulic lift, and others use the power take-off to drive a winch for lifting the load. This circular suggests an auto rear axle driven by the power take-off which is simple to construct and dependable in operation.

Many parts of this loader can be built from used auto and truck parts when other material is not available.

The authors wish to express appreciation for helpful plans furnished by the Ohio State University. Figures 2 and 7 are modifications of these plans. Fig. 11 is furnished through the courtesy of the South Dakota Experiment Station.

UNIVERSITY OF NEBR.
LIBRARY
MAY 5 1948
DOCUMENTS

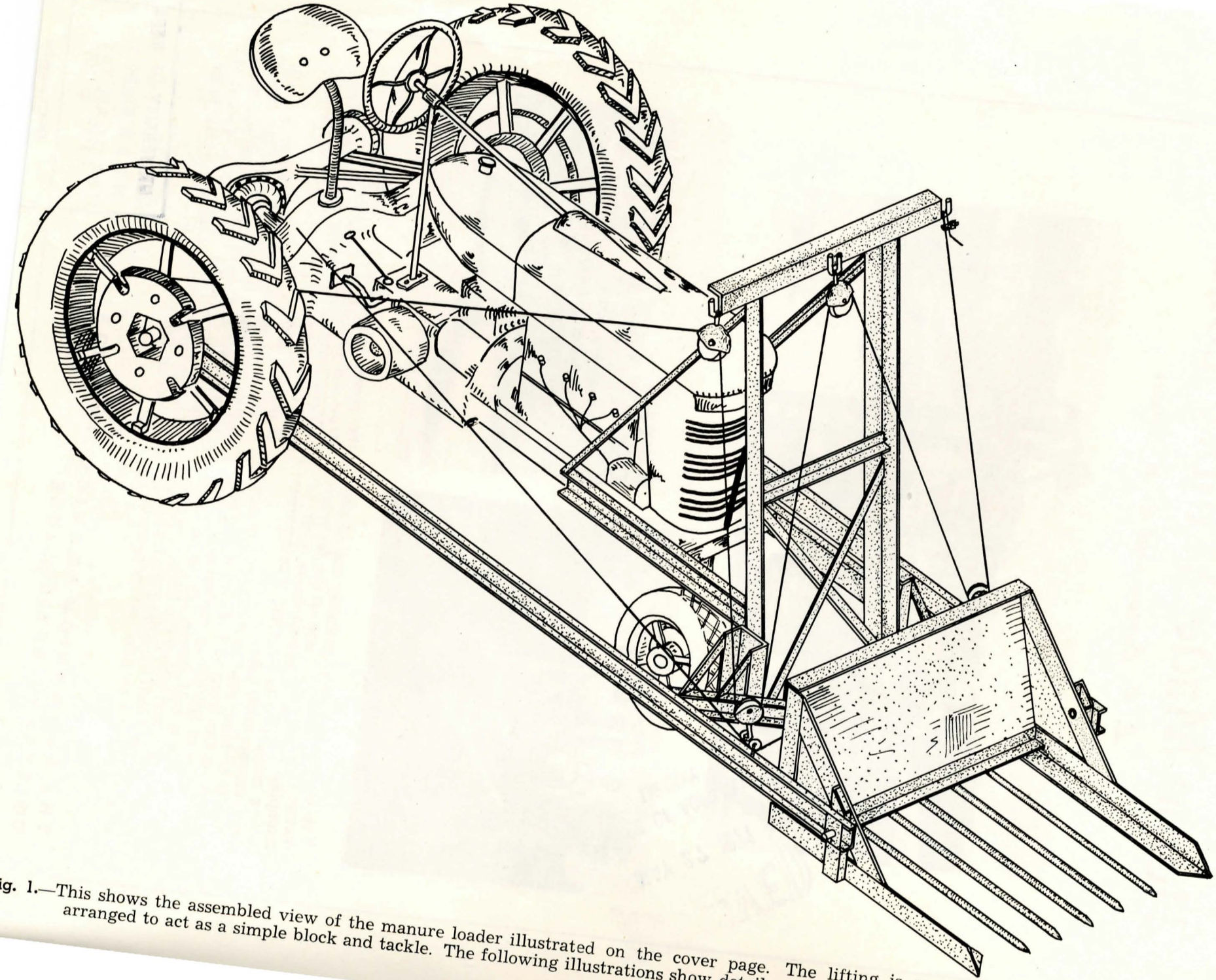

Fig. 1.—This shows the assembled view of the manure loader illustrated on the cover page. The lifting is accomplished by using one cable arranged to act as a simple block and tackle. The following illustrations show details of the various parts of this load

Fig. 2.—The lifting frame can be constructed of angle iron, channel iron, or auto frame. In this illustration, 2″ x 6″ hardwood strips are bolted on the sides of the steel frame to make a wider surface for the angle iron guides to ride against as the fork is raised. The hoist frame should incline slightly towards the rear so the arc path of the angle iron guides will be on the 2″ x 6″. Some builders prefer not to use the wood but make the iron guides wider as indicated in Fig. 1. Either method is satisfactory. The hoist frame should be located as close to the front wheels as possible without interfering with turning. In other words, have the hoist frame as near as possible to the front end of the tractor in order to minimize the load on the front steering assembly.

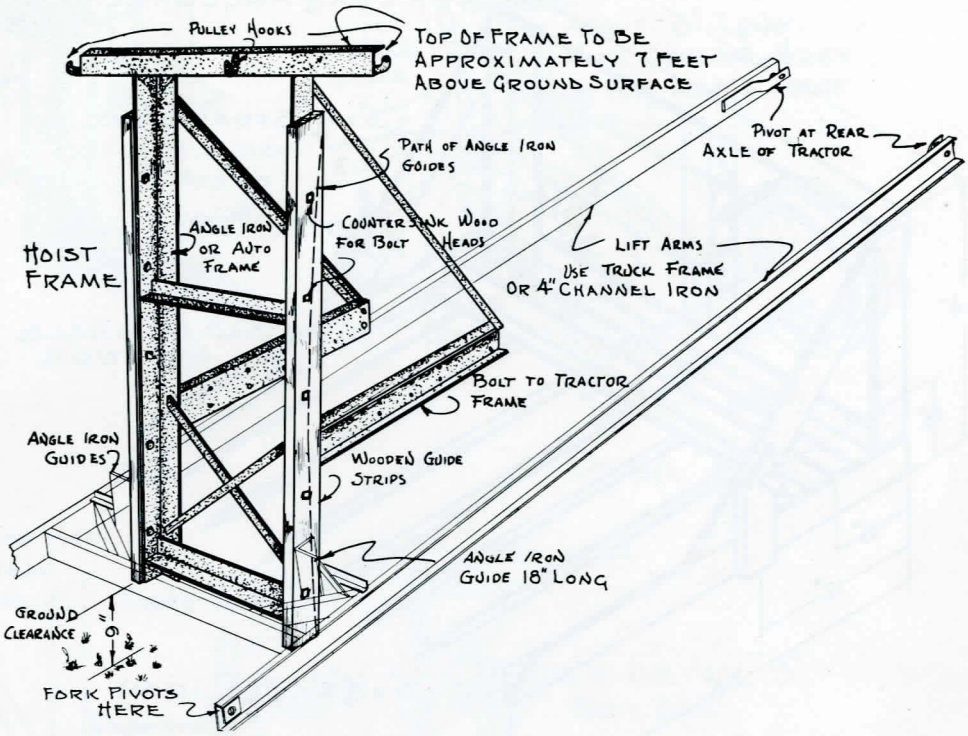

Fig. 3.—This indicates the general details of the lift arms, fork, and latch. The lift arms can be made from old truck frames or 4″ channel irons. For heavy duty, a heavier channel iron should be used. These arms should be hinged no lower than the rear tractor axle. The guide arms are important to keep the fork lifting evenly. They should be 18″ long and fit close to the hoist frame.

The front end of the fork teeth should not be over 5′ from the front end of the tractor. Any greater distance puts an unnecessary load on the front end assembly of the tractor. The latch is a very simple barn door type of hook that is easy to build and satisfactory.

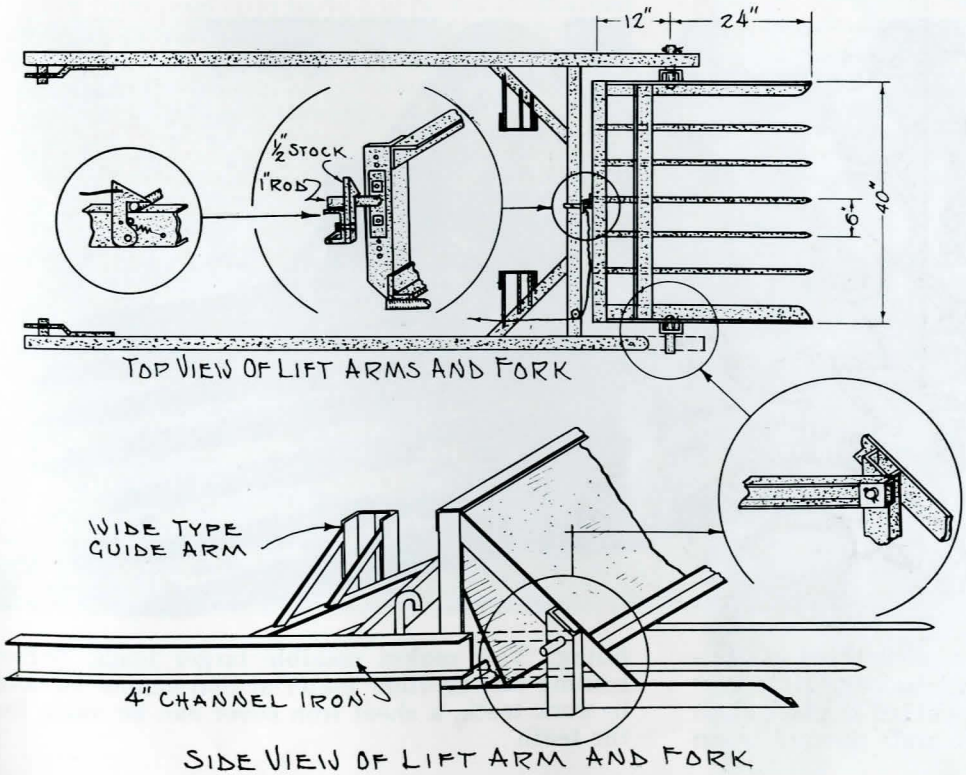

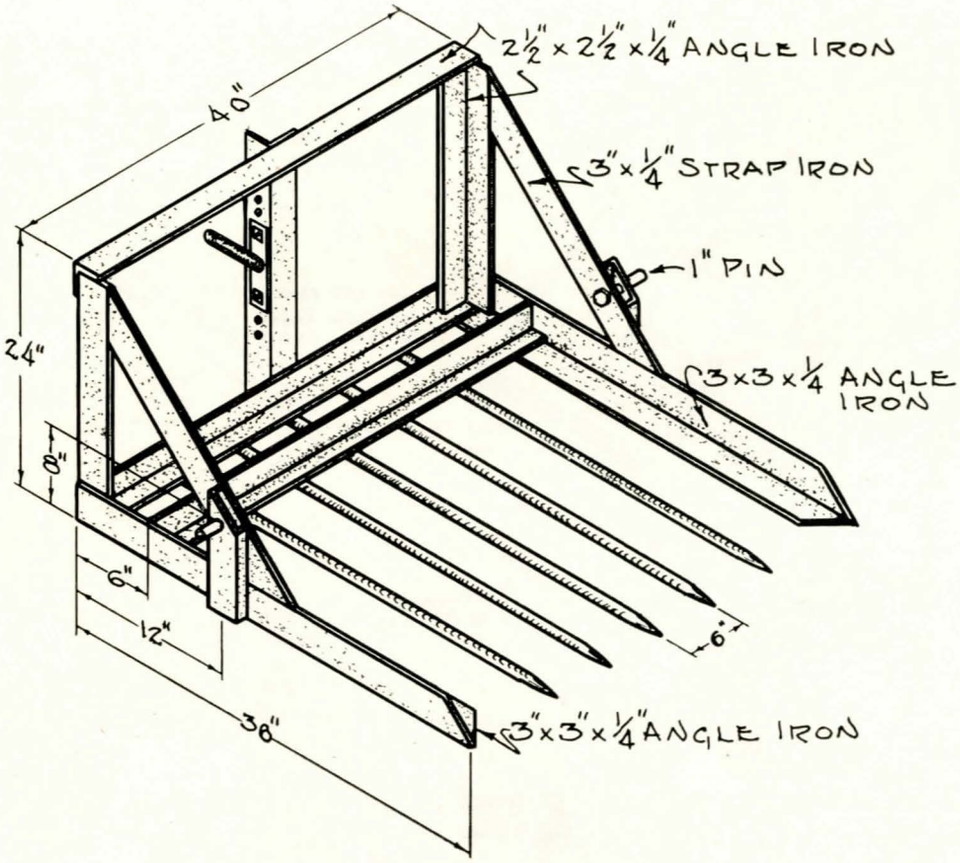

Fig. 4.—The fork frame is made entirely from angle iron welded together. The catch pin is made from a 1″ steel rod and should be mounted so that it can be adjusted for setting the proper angle of the fork teeth. The teeth can be made from angle iron or "T" iron. When available, used auto drive shafts make very good teeth. Used auto rear axles make excellent teeth and can be used by making the fork slightly shorter in length.

If dimensions, as indicated, are followed, it will not be necessary to use any springs, chains, or levers to bring the fork back to home position after unloading, as the fork is balanced and its own weight will snap it back into place automatically.

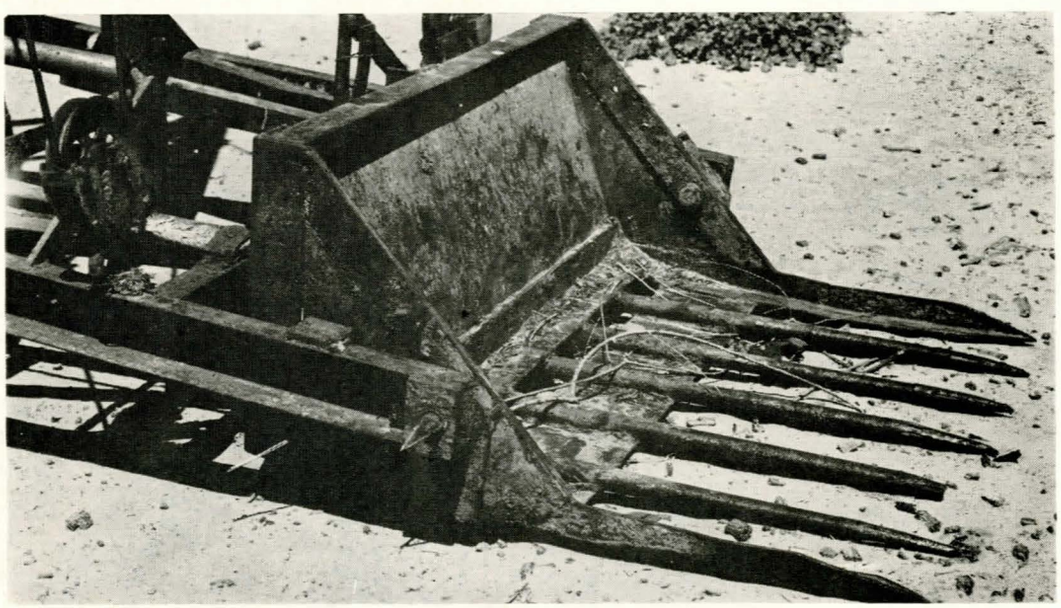

Fig. 5.—This fork has been constructed as illustrated in Fig. 4 and found satisfactory. Note how the sheet iron back has been welded in place at an angle allowing the manure to slide upward when filling. This makes possible larger loads. When loading dirt or other material that cannot be held by fork teeth, a sheet iron cover can be made for the teeth.

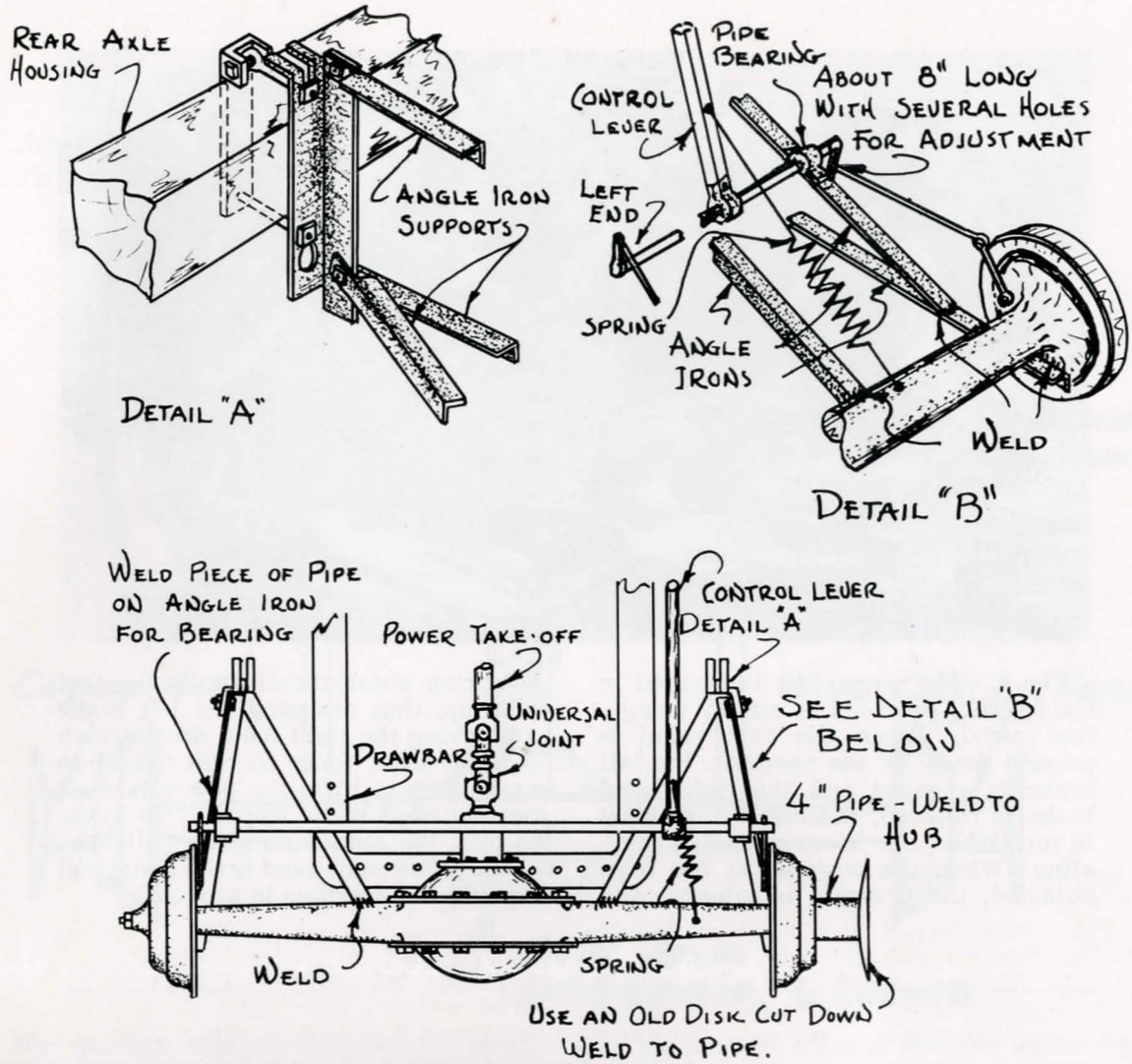

Fig. 6.—The power lift mechanism is made mainly from used auto parts and power is obtained from the power take-off. Detail "B" shows how the control lever is arranged to operate the brakes. By pushing the control lever forward, the left hand brake is applied and the right hand brake is released. With the control lever released and held back by the spring, the opposite effect is produced. This simple arrangement makes it possible to use an auto rear axle as a power lift, clutch, and brake, while the power take-off is operating.

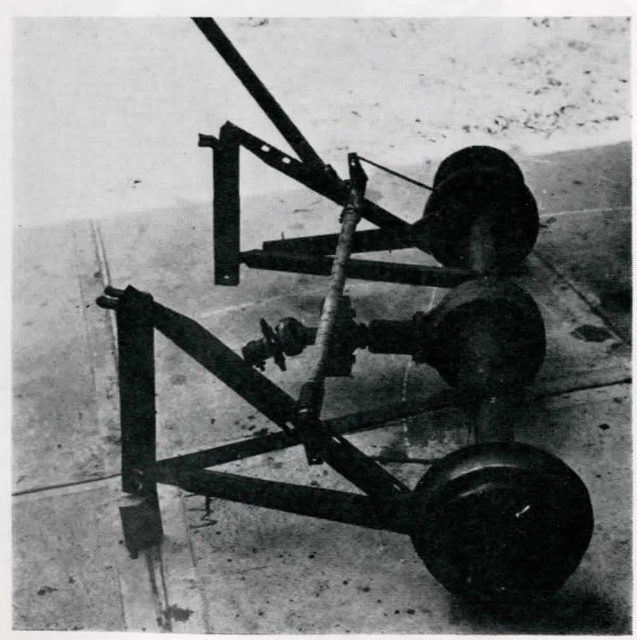

Fig. 7.—This type of power lift works equally well for a manure loader, power buck rake or stacker bucker. It is important to use two universal joints to avoid any misalignment of the power drive parts. Most any auto rear axle is suitable for this purpose but the type having a universal joint near the rear end of the drive shaft is preferred as it is easier to convert for this use.

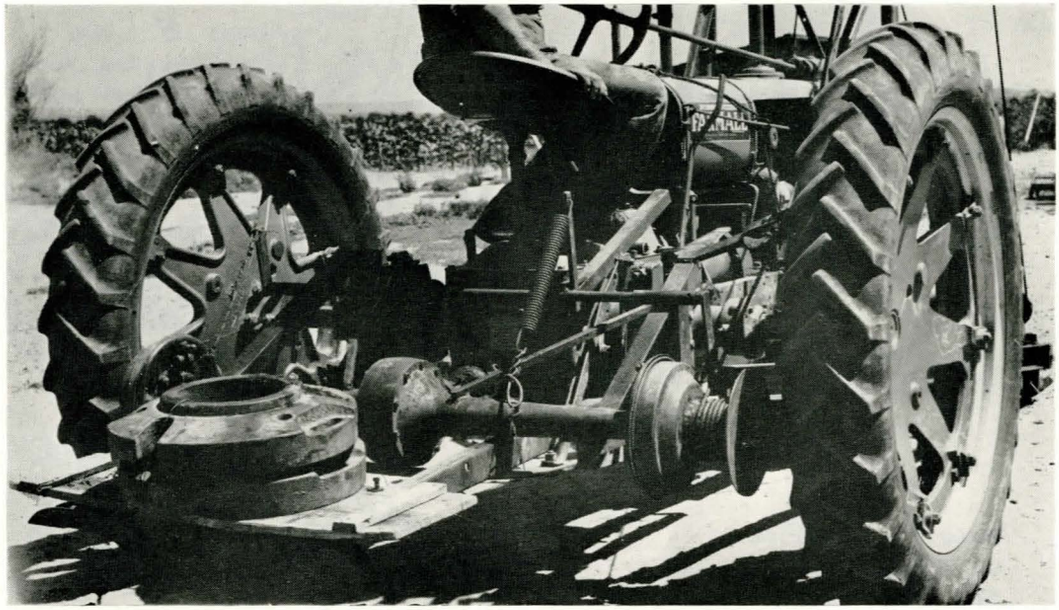

Fig. 8.—The power lift illustrated in the figure is operated by simply using a foot pedal. When the foot pedal is pressed down by the operator, the left brake is engaged and the right hand brake is released, causing the windlass to turn when the power takeoff is operating. When the desired lift has been obtained, the pressure is released and the spring automatically pulls the foot pedal up, thus releasing the left brake and locking the right hand drum which holds the load. Since the left hand hub is now free to turn, the power take-off does not need to be stopped. To lower the fork, the pedal is depressed slightly, releasing the right hand brake drum and allowing the windlass to unwind.

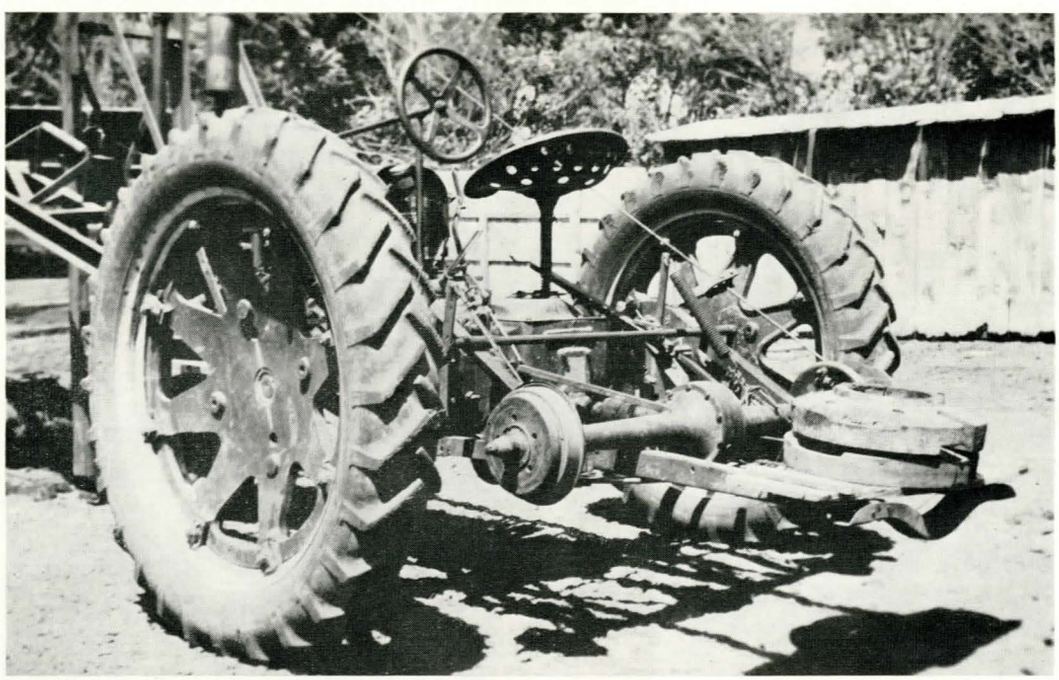

Fig. 9.—An added frame has been attached to the rear of this tractor to carry extra weights which were used to reduce the weight on the front end of the tractor.

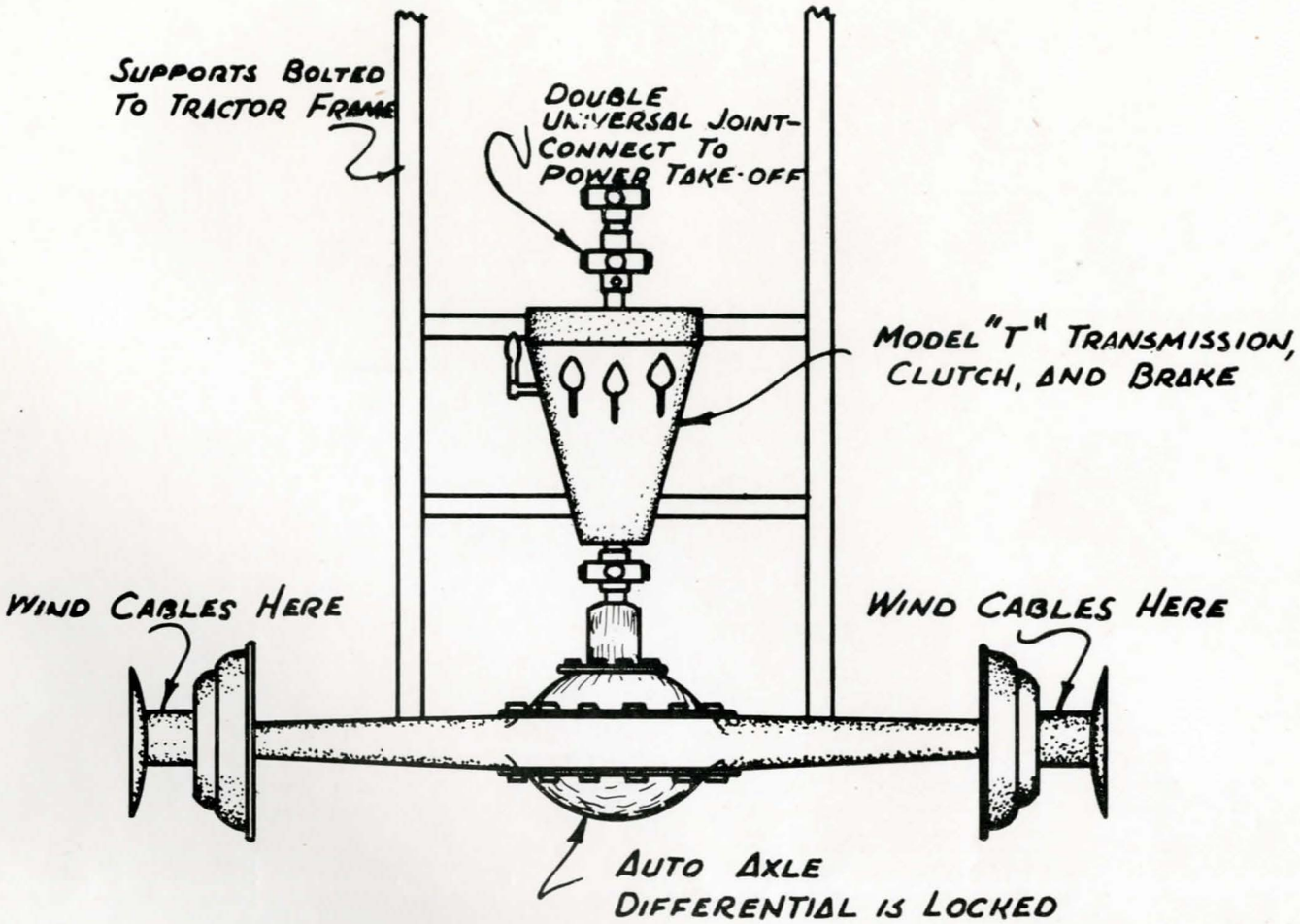

Fig. 10.—Another type of lift used by some builders which could be used on the loader illustrated in Fig. 1 by using a separate cable on each side of the loader. In this illustration the differential has been locked and a clutch inserted between the power take-off and the rear axle. Any type of clutch may be used for this purpose; however, this makes the lift more complicated to build and operate than the one shown in Fig. 6 and 7.

Fig. 11.—Another type that has the advantage of lifting separately on each side of the fork as in Fig. 10, and also the simplicity of operation of the lift described in Fig. 6 and 7.

Distributed in furtherance of Acts of May 8 and June 30, 1914. Extension Serivce of the University of Nebraska College of Agriculture, the U. S. Department of Agriculture cooperating. W. H. Brokaw, Director, Lincoln, Nebraska. 9-44-10M