University of Nebraska - Lincoln
DigitalCommons@University of Nebraska - Lincoln

Historical Materials from University of Nebraska-Lincoln Extension

Extension

8-1957

# EC57-701 Irrigation Turbine Pump Drives

Delbert E. Lane

Paul E. Fischbach

H. Robert Mulliner

Follow this and additional works at: http://digitalcommons.unl.edu/extensionhist

Lane, Delbert E.; Fischbach, Paul E.; and Mulliner, H. Robert, "EC57-701 Irrigation Turbine Pump Drives" (1957). *Historical Materials from University of Nebraska-Lincoln Extension*. 3378.
http://digitalcommons.unl.edu/extensionhist/3378

This Article is brought to you for free and open access by the Extension at DigitalCommons@University of Nebraska - Lincoln. It has been accepted for inclusion in Historical Materials from University of Nebraska-Lincoln Extension by an authorized administrator of DigitalCommons@University of Nebraska - Lincoln.

57-701
CYT
Vert.
File
S
85
E7
no. 701

August 1957 E.C. 57-701

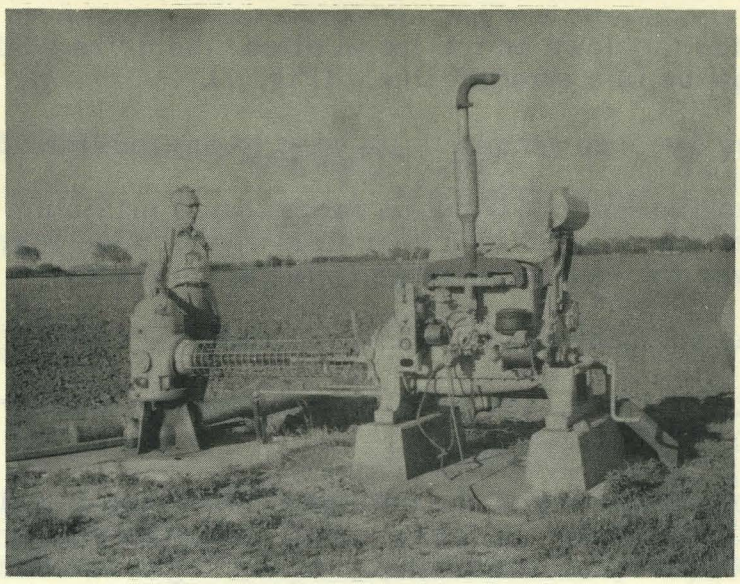

# Irrigation Turbine Pump Drives

by

Delbert E. Lane, Paul E. Fischbach, and H. Robert Mulliner

The efficiency and installation of the four common types of pump drives in Nebraska is discussed in this circular.

The right-angle gear head drive is used extensively and is usually about 95 percent efficient. It is considered the most dependable, and is not affected greatly by moisture and temperature conditions.

The V-belt drive, when properly installed, is approximately 95 percent efficient. Temperature and moisture conditions will have some adverse effect on efficiency. V-belts are not affected by rain as much as flat belts. The manufacturer lists the correct pulleys and belts for maximum efficiency under nearly all conditions.

Generally, not more than seven belts should be used on a quarter-turn drive because the distance between the point where the belts leave the driven pulley and enter the drive pulley is not the same and it is not possible for all belts to have the same tension. This condition is one reason why it is not permissible to have a distance less than 62 inches between pump pulley and power unit pulley on a two-belt quarter turn drive.

The direct drive, such as a hollow shaft electric motor used on turbines, approaches 100 percent efficiency. It is usually the cheapest. It is limited to those conditions where the speed of the power unit is the same as the rated speed of the pump. Extreme care must be exercised in selecting the size of the motor to fit the pump.

Flat-belts are still in use on some of the shallower wells, but their transmission efficiency varies from 80 to 95 percent. Losses are numerous but occur largely in slippage. Quarter turn, half turn drives and idler pulleys all reduce the efficiency of flat-belt drives. They are not recommended for operation in damp conditions.

## Drive Shaft Alignment

1. Yoke A and B must be lined up in the same plane when pump shaft and engine shaft are parallel (See Fig. 1), otherwise undue vibrations will occur in the drive shaft.

2. Looking from the top down on the installation, the drive shaft, the engine, and the gear head should all be in a straight line. (Fig. 1).

3. Pump should be fastened firmly to its base to prevent misalignment.

4. Center line of engine shaft must not be more than a maximum of 5/8 inch higher or lower than the center line of a 36 inch gear head shaft. (See Fig. 2). This enables more uniform wear over the needle bearings in the drive shaft.

5. Shafts of engine and gear head must be parallel.

6. Universal joints, in pairs, can be aligned so that the angular fluctuations of the joints will cancel each other.

7. If the shafts connected to one of the universal joints are in a different plane than the shafts connected to the other universal joint, the yoke on the intermediate shaft should be placed out of line by an amount equal to the angle between the planes.

8. Oil should be changed in the gearhead every 1000 hours of operation. Use a high grade turbine oil of 300 viscosity at 100° F. for winter and 500 viscosity at 100° F. for summer.

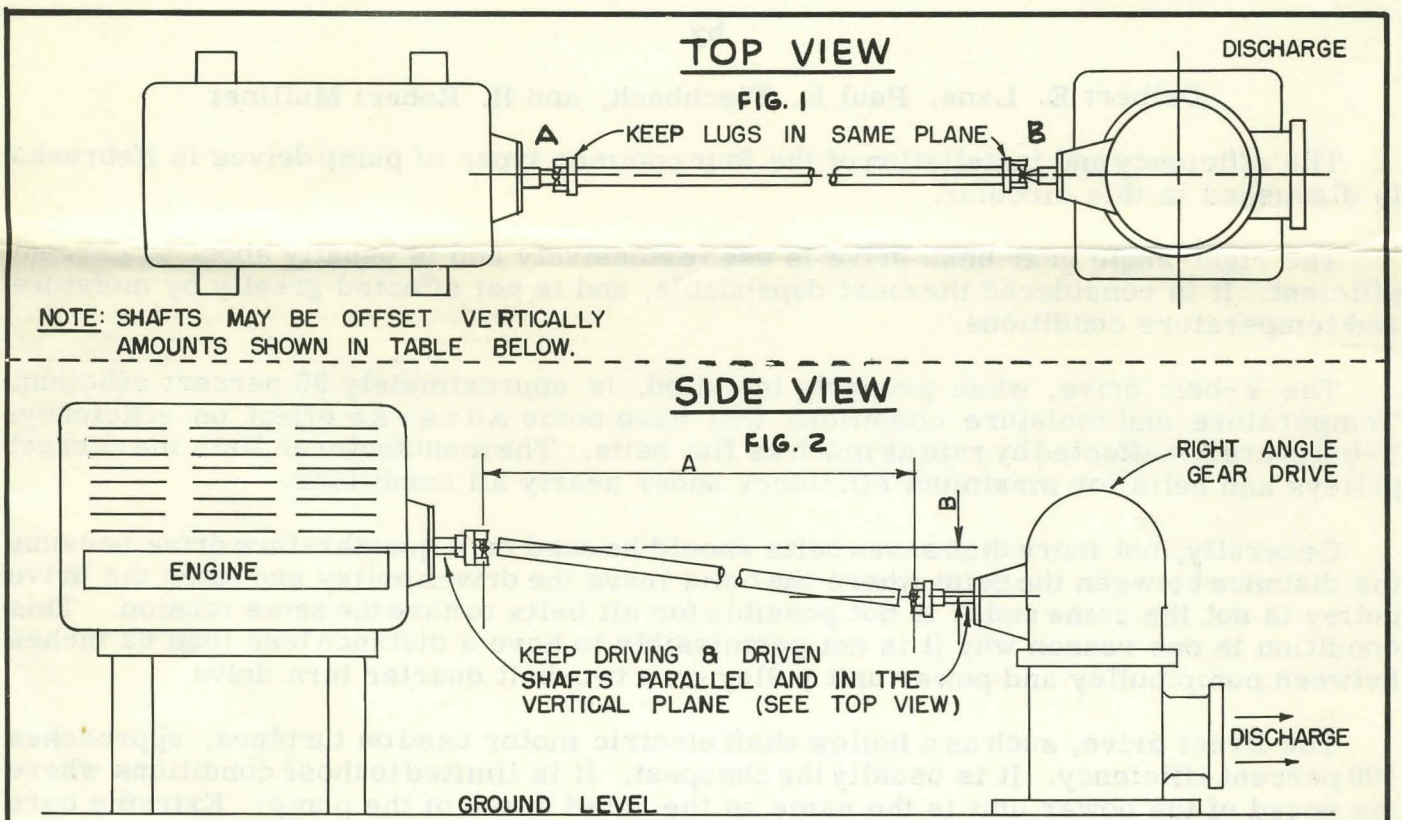


| A (INCHES) | B (INCHES) |
|---|---|
| 20 | 3/8 |
| 30 | 1/2 |
| 40 | 3/4 |
| 50 | 7/8 |
| 60 | 1 |

UNIVERSITY OF NEBRASKA
COLLEGE OF AGRICULTURE
AGRICULTURAL EXTENSION ENGINEERING

IRRIGATION PUMP DRIVE

| | |
|---|---|
| DESIGNED BY D.E.L. | NO SCALE |
| DRAWN BY F.V.L. | DATE: 30 APRIL, 1957 |
| CHECKED BY D.E.L. | PLAN NO. 10.41241-2 |

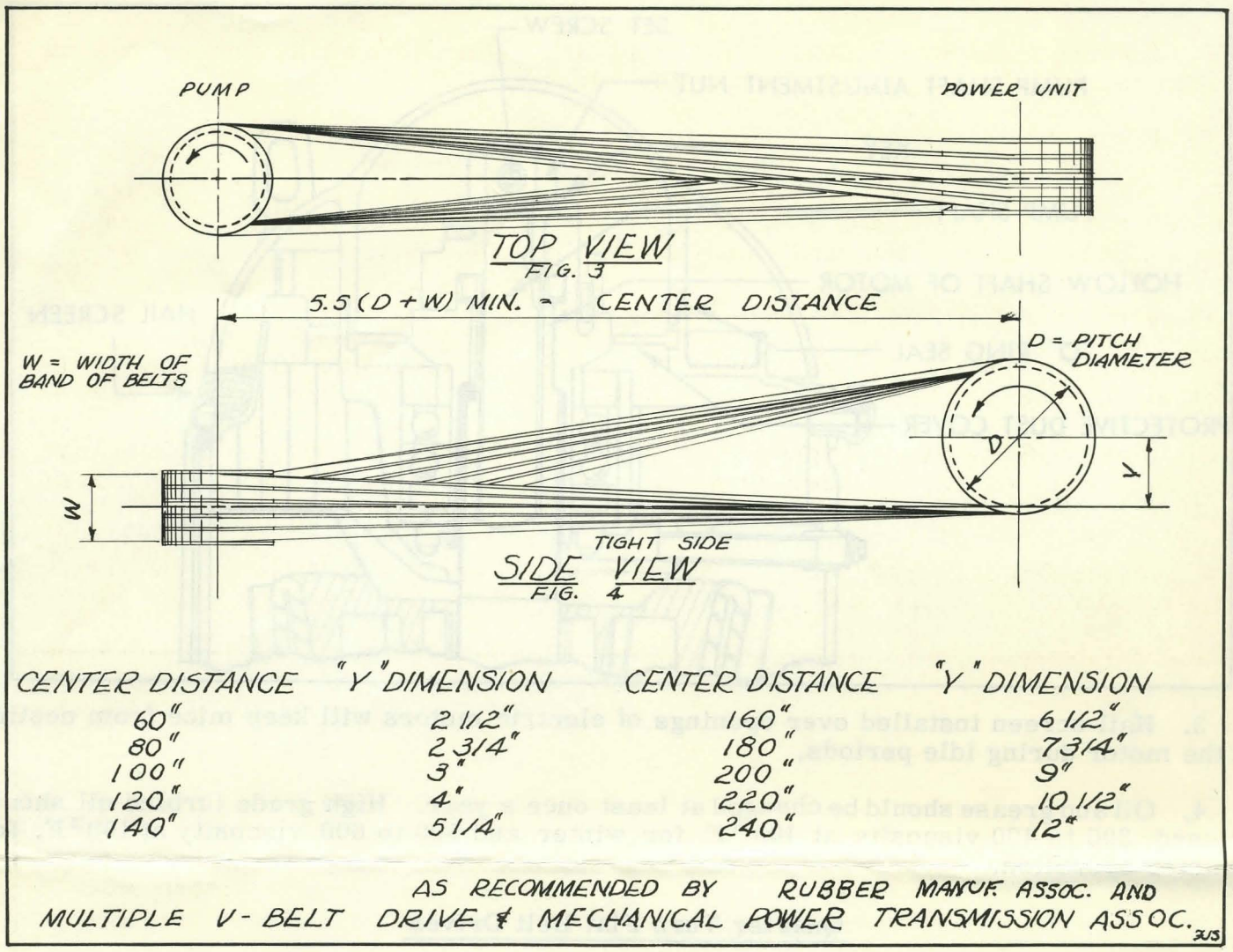


## V-Belt Alignment

1. Always use deep groove sheaves (pulleys) on quarter turn drives.

2. Always use a set of matched belts.

3. Center line of pump pulley should be in line with center line of power unit pulley as shown (Fig. 3).

4. Direction of rotation must be such that the tight side of the belts will be on the bottom.

5. It is recommended that the pulley size be not less than 9 inches in diameter for "C" belts.

6. Center line of pulley on engine should be offset a distance Y as shown in sketch (Fig. 4).

7. All V-belt pump drives should be engineered for length of belt, pulley size, and number of belts.

## Direct Drive for Electric Installation

1. Before assembling, start motor to check for correct rotation.

2. Put in key, put on the adjusting nut, pull up pump shaft according to manufacturer's instructions, then insert set screws.

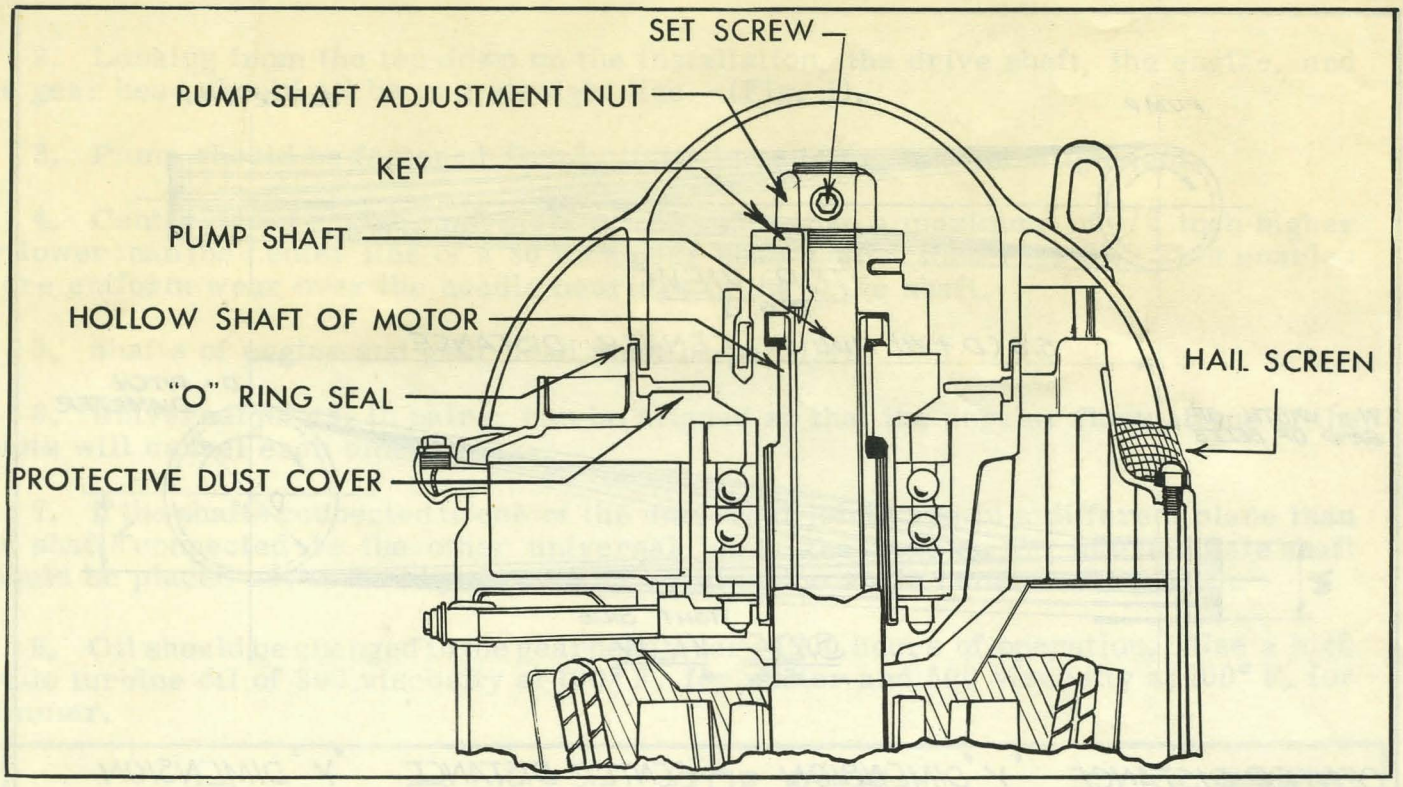


3. Hail screen installed over openings of electric motors will keep mice from nesting in the motor during idle periods.

4. Oil and grease should be changed at least once a year. High grade turbine oil should be used; 300 to 400 viscosity at 100° F. for winter and 500 to 600 viscosity at 100° F. for summer operation.

## Quarter Turn Flat Belt Drives

1. Pulley faces, diameters, and belt thickness should be in accord with belt manufacturer's recommendations.

2. Belts should be at least 1 to 2 inches narrower than pulley faces to prevent possible damage to belts from rubbing against supports.

3. Quarter turn drives should be designed to run with slack side on top. Belt must always lead straight into the pulley.

4. Do not add more tension to belt than is necessary to pull the load. An excess of ten (10) percent in tension will decrease belt life sixty (60) percent of its rated life.

## Safety

A shield gives no protection if it is not used. The development of adequate shields will be the farmers responsibility i many cases.

Protection can be provided with shields made from welded steel wire, sheet metal or wood.

Practice safety:

1. Keep shields in place.
2. Have adequate shields.
3. Be alert at all times: