University of Nebraska - Lincoln
DigitalCommons@University of Nebraska - Lincoln

Historical Materials from University of Nebraska-Lincoln Extension

Extension

1964

EC64-737 What's Your Question on Slotted Floor?

E. Olson

Follow this and additional works at: https://digitalcommons.unl.edu/extensionhist

Olson, E., "EC64-737 What's Your Question on Slotted Floor?" (1964). *Historical Materials from University of Nebraska-Lincoln Extension*. 3687.
https://digitalcommons.unl.edu/extensionhist/3687

This Article is brought to you for free and open access by the Extension at DigitalCommons@University of Nebraska - Lincoln. It has been accepted for inclusion in Historical Materials from University of Nebraska-Lincoln Extension by an authorized administrator of DigitalCommons@University of Nebraska - Lincoln.

AGRI
S
85
E7
#64.737

EC 64-737

FLOOR SHAPES WITH SLOTTED FLOORS

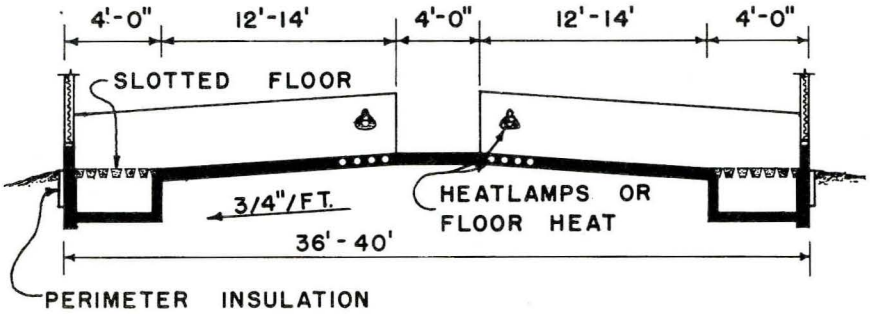

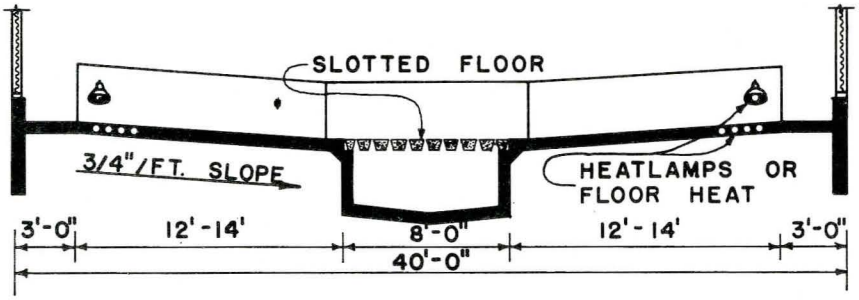

What's Your Question on Slotted Floor?

By E. A. Olson

"Should I use slotted floors in my hog house?" This has been a common question in swine circles for the last two years.

Slotted floors are not new. They originated in Iceland about 200 years ago for sheep. About 30 years ago Norwegian farmers adapted slotted floors for sheep and goats. Since the early '50's considerable use has been made in Europe of slotted floors for all types of animal. Here in the United States we have been using them for poultry and dairy calves for some time.

Slotted floors are an elevated floor made of uniformly spaced slats or bars. A variety of materials —wood, concrete, or steel—are being used. The slot openings allow the manure to be worked through the floor by the ainmals into the space below.

Why Slotted Floors?

Less labor is required to remove waste material in the slotted floor building, according to recent Illinois research. Cleaning time was 5½ minutes per day in the slotted floor building as compared with 17 minutes for a solid floor building, during a 113 day test period.

Another advantage is that the building can be cleaned at your convenience. Regular or daily cleaning is advisable in a solid floor or regular concrete floor building. Additional reasons for interest in slotted floors are:

1. Bedding material is not required.
2. More hogs can be handled in a pen or building.
3. Sanitation is improved, since the pig is quickly separated from his waste.
4. Pigs are clean and dry.
5. Better control of manure odors with liquid submersion systems.

Complete or Partially Slotted Floor

Your choice of feeding methods, management and cost will help determine whether you use a partial or a floor that is completely slotted. Partially slotted floors are being used successfully in farrow-to-finish buildings.

Feeding directly on the floor is gaining in popularity and can be done with a partially slotted floor. Equipment is now on the market for automatic interval feeding and may be used to limit feed.

With the completely slotted floor, self-feeders must be used—a type which can easily be adjusted to prevent feed wastage is advisable. More research and experience is needed to help determine which floor system is best.

Slotted Floor Materials

Wood—Oak material is preferred, however, other hardwood such as Elm, Hickory, and Maple can be used. Cut these woods while they are green, leaving the top surface of the slats rough. Slat dimensions are shown below—note that the size is dependent on the distance between the supports.

To keep slots uniform in width, the slats are sometimes fastened together with wood or steel dowels. Wood strips can be nailed across the top of the slats—space every

EXTENSION SERVICE
UNIVERSITY OF NEBRASKA COLLEGE OF AGRICULTURE AND HOME ECONOMICS
AND U. S. DEPARTMENT OF AGRICULTURE COOPERATING
E. F. FROLIK, DEAN J. L. ADAMS, DIRECTOR

WOOD SLAT DESIGN

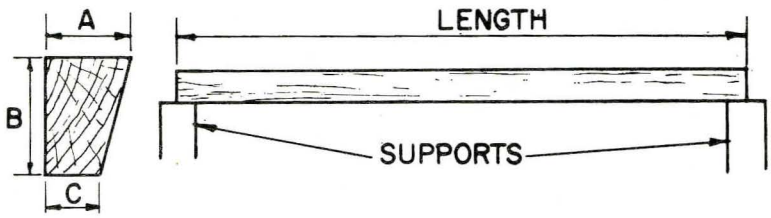

LENGTH	A	B	C
4'	2"	2 1/2	1 3/4"
6'	2 1/2"	3"	2"
8'	3"	3 1/2"	2 1/4"
10'	3 1/2"	4"	2 1/2"

NOTE: When groups of slats are fastened together with steel rods or wood dowels, dimensions A and C may be reduced:

1/2 in. for 4 ft. and 6 ft. lengths
5/8 in. for 8 ft. and 10 ft. lengths.

three or four feet—to maintain the uniform opening. Reports show that wood slats will wear out in 2-5 years. Costs for prefabricated wood floors will run about 45 cents per square foot.

Concrete—This is one of the most durable materials for making slotted floors. It costs more than wood, but less than steel. At present prices, the *annual* cost is likely to be less than for other materials. European reports show a preference for concrete over wood.

Two reinforcing bars are required in each beam. The top bar prevents cracking during handling. The lower bar carries the load on the beams—its size is determined by the length of span. When large feeders are used, provide additional support to carry the extra load.

Beams should be formed carefully to avoid rough or chipped edges and with the top surface slightly arched. A good quality concrete is essential to assure satisfactory results. If concrete is mixed on the job, use a mix with not more than five gallons for each sack of cement. (Sand and gravel will contain some water unless it is extremely dry.)

To develop full strength of the concrete, proper curing is essential. Keep the concrete wet or damp for *at least 5 days.* Concrete kept wet will gain strength and assure a more satisfactory wearing surface. Pre-cast concrete slats are available from at least two plants in Ne-

(continued on next page)

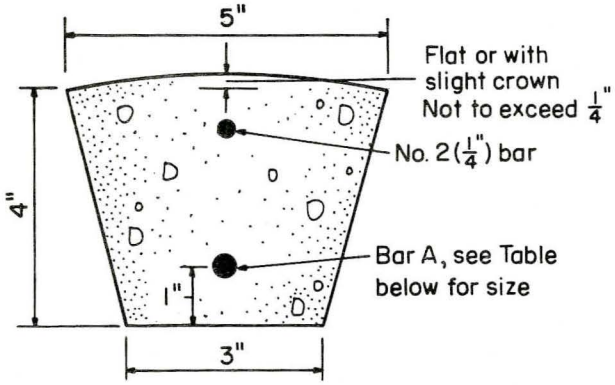

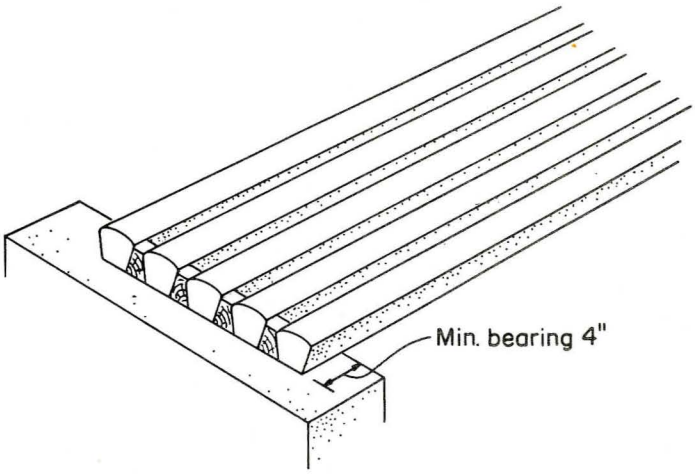

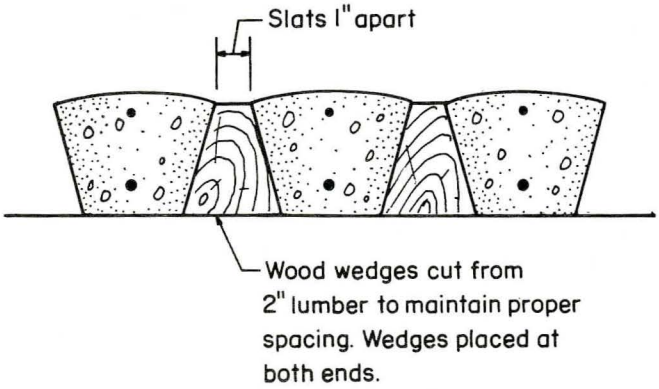

Concrete Slats

CLEAR SPAN	SIZE, BAR A
4'-0" to 7'-0"	No. 3 (3/8")
8'-0" to 10'-0"	No. 4 (1/2")

STEEL SHAPES FOR SLOTTED FLOORS

3/4" STEEL MESH

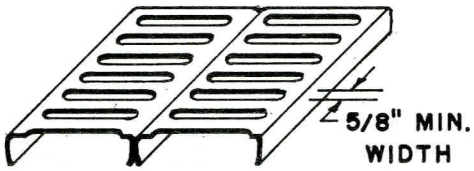

PERFORATED PLANK

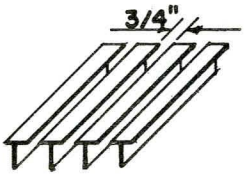

T - BAR

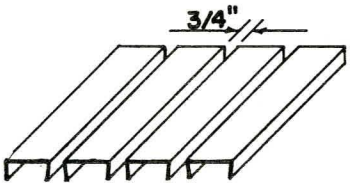

INVERTED U - BAR

braska. Costs range from 60-90 cents per square foot.

Steel in a variety of forms is being used for slotted floors. At present, it is the most expensive material, but is smooth, nonporous and cleans easily.

Expanded steel mesh—flattened—has been used in a number of locations for slotted floors. Supports are needed about one foot apart. Galvanized ¾ inch pipe can be used to bridge a gutter 4-5 feet wide.

Information on the supports needed for the many different steel shapes—T-Bar, perforated plank, and inverted U-Bar—can be obtained from the steel supplier.

Keep in mind that the steel floor needs to be strong enough to prevent bending under the pigs' weight. Pigs do not like to get on a floor that flexes as they move around.

Rusting has been a problem with ordinary floors—bars have lasted only 3-4 years. New special corrosion-resistant steels are being tested and may overcome this problem. Prices for steel slotted floors will range from about $1.20 to $2.00 per square foot.

How Wide a Slot?

Slot widths vary with the size of the pig and the top slat width. Iowa recommends a one-inch slot if the slats are three inches in width or more, even for baby pigs. In fact, University of Illinois researchers found that small pigs have much less trouble with their feet getting caught in slots one inch wide as compared with one-half inch slots.

Supporting the Floor

The supporting system for a slotted floor will depend on the building construction and the type of slat used. With partially slotted floors, the gutters can be spanned with bars or slats of concrete, wood or steel with only end support.

For a completely slotted floor, a system of girders or supporting walls is needed to hold up the floor. The table in Figure 5 gives girder sizes for different spacings and lengths when using wood slats or the lighter types of steel bars. Concrete beams for slotted floors are usually supported on masonry walls. If concrete blocks are used, the top course should be solid or covered with pressure-treated plank to provide a sill under the beam ends.

Large storage-type self-feeders occupy valuable floor space and require additional strength in the floor support system. Small feeders, filled mechanically, use minimum floor space and provide fresh feed.

Slat length between girders	Girder sizes for spans of:		
	8′	10′	12′
4′	2″ x 8″	2″ x 10″	2″ x 12″
5′	2″ x 8″	2″ x 10″	2″ x 12″
6′	2″ x 10″	2″ x 12″	3″ x 12″
8′	2″ x 10″	2″ x 12″	3″ x 12″
10′	2″ x 12″	3″ x 12″	4″ x 12″

What Type of Building?

Slotted floors can be used in any kind of building with adequate insulation and ventilation to properly control temperature, moisture and odors. The amount of insulation recommended is 2 inches for the walls and 3 inches for the ceiling with a vapor barrier on the inside surface. During the winter, this amount of insulation will hold the inside temperature well above freezing most of the time, if the building is full of animals. In the hot weather season, the insulation helps to make a cooler building and more comfort for the pigs.

Ventilating systems for slotted floor buildings must be engineered for adequate and variable capacity, automatic control and dependability. The ventilation requirement is increased to some extent by the heat, moisture and gases resulting from bacterial digestion of the animal wastes in the underfloor holding pits.

During hot weather the main problem is to remove heat from the building. Ventilation capacity may need to be as high as 100 cfm (cubic feet per minute) for each market size hog.

Wintertime ventilation capacity is dictated by the need to remove moisture and harmful gases. With average outdoor temperatures the ventilation rate is in the range of 5 to 8 cfm per animal (assuming 200-pound pigs). About one-third of this rate is needed as a minimum during very cold weather. Supple-

ENTIRE FLOOR SLOTTED

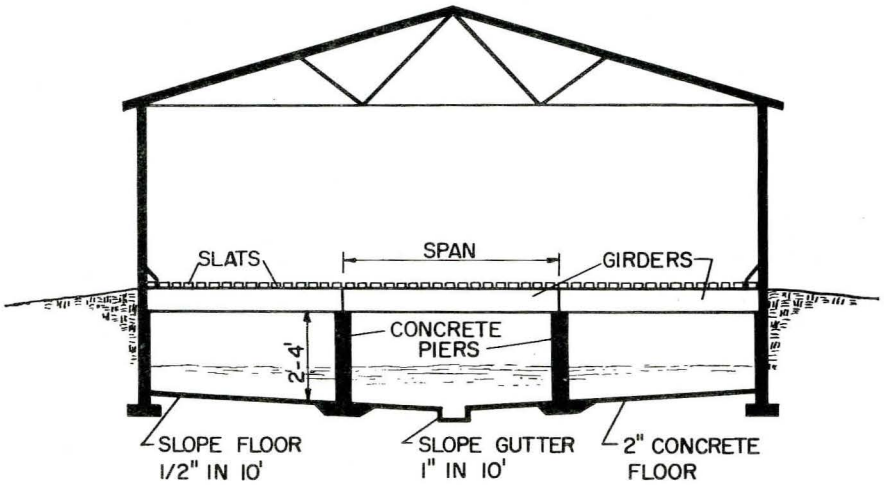

mental air heating may be necessary to permit adequate air changing and also maintain temperature at a desirable level.

To prevent the accumulation of harmful gases that are heavier than air it is advisable to provide some air outlets below the floor level. In closed buildings, some emergency means of admitting fresh air should be provided in case of power or equipment failure. An alarm system to warn of ventilation failure could be a good investment.

Removing Animal Waste

The manure-water mixture which accumulates under slotted floors can be removed by simply pulling a drain plug, or opening a valve, if site conditions permit discharge through a gravity outlet. The plug or valve must be located inside of the building for protection against freezing. In situations where a gravity outlet is not possible, a liquid manure pump can be used to remove the waste. With either method of removal, the watery mixture may be released to a lagoon, or put on the land with suitable hauling and spreading equipment.

The gutters under partially slotted floors can be emptied more completely and cleaned more easily than the holding pits which extend under all of the floor area. A slope of about 1 inch in 25 feet seems to be satisfactory for wide gutters and the floors of large holding pits. Narrow gutters and those with V-shaped bottoms will empty better with somewhat more slope.

The capacity of the gutter or underfloor pond largely determines the frequency of emptying. About ½ cubic foot of capacity is needed per day for 5 hogs.

Slotted floors cannot replace good management, but they make it possible to greatly reduce the labor requirement in confinement systems. As more experience and research information is obtained there will be better answers for some of the questions being asked today.

Plans

Building plans showing the use of slotted floors are available through your County Extension Agent or from Extension Service, College of Agriculture, University of Nebraska, Lincoln. Several farrow-to-finish systems are shown in Plan 72676. Slotted floor swine finishing systems are described in Plan 72675. Each plan shows several arrangements with details on insulation, ventilation, gutter construction, and management suggestions. Plans are $1.00 each.

E. A. Olson is Professor of Agricultural Engineering (Agricultural Extension).

Acknowledgment: Much of this information has been adapted from Report No. 6 "Designing Slotted Floors for Swine" prepared by Fred Roth, Extension Agricultural Engineer, Iowa State University.