University of Nebraska - Lincoln
DigitalCommons@University of Nebraska - Lincoln

Historical Materials from University of Nebraska-Lincoln Extension

Extension

1971

EC71-726 Dairy Housing and Equipment Handbook

Follow this and additional works at: http://digitalcommons.unl.edu/extensionhist

"EC71-726 Dairy Housing and Equipment Handbook" (1971). *Historical Materials from University of Nebraska-Lincoln Extension*. 4073.
http://digitalcommons.unl.edu/extensionhist/4073

This Article is brought to you for free and open access by the Extension at DigitalCommons@University of Nebraska - Lincoln. It has been accepted for inclusion in Historical Materials from University of Nebraska-Lincoln Extension by an authorized administrator of DigitalCommons@University of Nebraska - Lincoln.

AGRI
S
85
E7
#71-726

MWPS-7

EC 71-726

RECEIVED
FEB 16 1971
COLLEGE OF AGRICULTURE
LIBRARY

DAIRY HOUSING AND EQUIPMENT HANDBOOK

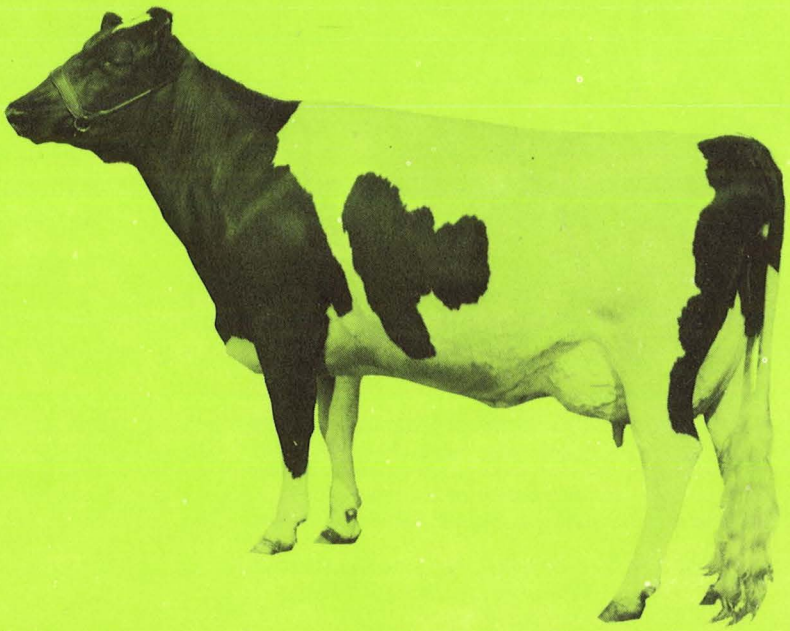

EC 71-726

UNIVERSITY OF NEBRASKA COLLEGE OF AGRICULTURE AND HOME ECONOMICS AND U.S. DEPARTMENT OF AGRICULTURE
COOPERATING

E. F. Frolik, Dean J. L. Adams, Director

The Midwest Plan Service prepares publications under the direction of agricultural engineers and consulting specialists. It is an official activity of thirteen Land-Grant Universities and the U.S. Department of Agriculture. The following are cooperating members:

University of Alaska
College, Alaska 99735

University of Illinois
Urbana, Illinois 61801

Purdue University
Lafayette, Indiana 47907

Iowa State University
Ames, Iowa 50010

Kansas State University
Manhattan, Kansas 66502

Michigan State University
East Lansing, Michigan 48823

University of Minnesota
St. Paul, Minnesota 55101

University of Missouri
Columbia, Missouri 65201

University of Nebraska
Lincoln, Nebraska 68503

North Dakota State University
Fargo, North Dakota 58102

Ohio State University
Columbus, Ohio 43210

South Dakota State University
Brookings, South Dakota 57006

University of Wisconsin
Madison, Wisconsin 53706

This book was prepared under the direction of the Dairy Work Committee of the Midwest Plan Service:

T.J. Brevik, Agricultural Engineering Department, University of Wisconsin, Chairman

J.S. Boyd, Agricultural Engineering Department, Michigan State University

A.R. Carlson, Agricultural Engineering Department, University of Alaska

C.O. Cramer, Agricultural Engineering Department, University of Wisconsin

D.J. Johnson, Agricultural Engineering Department, North Dakota State University

H.G. Young, Agricultural Engineering Department, South Dakota State University

J.H. Pedersen, ex-officio, Manager, Midwest Plan Service

Printings:
1st, 12M, Jun'63
2nd, 5M, Nov'63
3rd, 5M, Sep'64
4th, 10M, Oct'66

5th, Revised, 10M, Jan'71

For additional copies of this book or any of the publications listed on the back of this book, write to:

EXTENSION AGRICULTURAL ENGINEER

at any of the above institutions.

$2.00

Copyright ©1971, Midwest Plan Service
Iowa State University, Ames, Iowa 50010
Rights negotiable, inquiry invited

CONTENTS

PLANNING 1
- Planning Procedure
- Facilities
- Housing definitions
- Milking herd housing

FREE STALLS 3
- Free stall dimensions
- Typical free-stall barns
- Confined free stall layouts
- Free stall open lot

STANCHION BARN 9
- Cross sections
- Typical layouts
- Outside silage feeding layouts
- Milkhouses
- Milking room

MILKING PLANT 14
- Milking room
- Milkroom
- Holding pen
- Milking plant layouts

CALF HOUSING 19
- Warm Barn
- Cold Barn
- Pens

VENTILATION 22
- Buildings kept warm in winter
- Vapor barriers, Fans, Inlets
- Buildings kept cold in winter

MANURE HANDLING 27
- Comparison of methods
- Pond management
- Solid manure handling
- Liquid manure handling
- Waste from milking plant
- Slotted floor construction

FEEDING

Bunk Planning 35

Fenceline Bunks 37

Covered Mechanical Bunks 40

Mechanical Bunks 41

Feeding Fences 42

Lot Bunks 44

Self-Feeding Wagon 45

Silage Carts 46

Mineral Feeders 47

Covered Hay Feeder 48

Waterers 49

FENCING

Windbreak Planning 51

Windbreak Fences 52

Fences 54

Gates 56

Hinges and Latches 58

Stiles and Passes 59

Stock Guards 60

HANDLING

Stalls & Pens

- warm barn 61
- calf stall 62
- cold barn 63
- pens for pastures 64

Bull Pens 65

Breeding Rack 67

Corrals 68

Headgates 69

Loading Chutes 70

Sun Shades 71

Tilting-Cow Table 72

Tilting-Calf Table 73

CONSTRUCTION 75
- Materials
- Concrete
- Paint
- Fasteners
- Nails, Screws, Bolts, Glue

TABLES 82

INDEX

PLANNING

Planning Procedure

Write down each decision as it is made.

1. Determine herd size from the table below.
2. Decide on the type of each facility desired, selecting from the major alternatives listed in the outline at right.
3. Compute the sizes of all facilities using the data and suggestions throughout this book. Sketch each major building or facility. You'll need an idea of the sizes before you can plan further.
4. Identify possible sites, considering such things as overall size, access from the rest of the farm and farmstead, and possible use of existing buildings. The best site may well not include the old barn, which may have been poorly located.
   The site selected will affect the layout of buildings and facilities, and the layout needed will affect the choice of the best site.
5. Sketch tentative layouts for each possible site, using the recommendations for orientation, traffic routes with all-weather access, snow and wind control, drainage, waste disposal, and the building sizes selected.
6. Select the combination of site and layout which best fits your needs and the recommendations given.
7. After all decisions are made, and before starting construction, get approval from health and marketing authorities.

Facilities Needed

Housing

- Milking Herd
  Free stall
    open lot, cold covered, warm enclosed
  Stanchion barn
    stanchion, tie stall, comfort stall
- Dry Cows and Heifers
  Free stall, loafing shed, stanchion
- Calves
  0 to 6 weeks of age
    individual stalls or pens
  6 weeks to 10 months of age
    pens—solid or slotted floor,
    loafing sheds, free stall

Milk Handling

- Stanchion Milking
- Milking Parlor
- Milk House

Feed Storage

- Roughage
- Grain

Feeding Facilities

- Stanchion Barn
- Free Stall
- Milking Parlor

Manure Handling Facilities

- Solid Waste Handling
    Stacking, daily hauling
- Liquid Waste Handling
    Slotted or solid floors, tanks, lagoons

Table 1. The make-up of a typical dairy herd

		Milking Cows[1]	10	20	30	40	50	100
		Dry Cows	2	5	7	9	11	22
		Total Mature Cows	12	25	37	49	61	122
Weights of mature cows in milk		Heifers, 10 months to freshening	5	11	16	21	27	53
		Calves, 1½ to 10 months old[2]	3	6	9	12	15	29
Breed	Weight	Calves, Up to 1½ months old[3]	2	4	6	7	9	18
Jerseys	1000 lbs							
Guernseys	1100 lbs	Total Animals in Herd	22	46	68	89	112	222
Ayrshires	1200 lbs							
Brown Swiss	1400 lbs							
Holsteins	1500 lbs							

1. Milking cows = cows in milk.
2. Bull calves raised for sale will increase this figure.
3. Includes all calves—bulls and heifers.

Housing Definitions

"Cold" housing—means cold in winter. It is designed to use natural air movement to keep inside temperatures within a few degrees of outside conditions.

"Warm" housing—means warm in winter. It is designed to use fans to provide air movement, at least in winter. Insulation helps retain animal heat to keep inside temperatures above about 45° in winter.

Stanchion barn—each cow is tied in a stanchion, tie stall, or comfort stall. Buildings are usually insulated, ventilated, and operated warm (45°-50° in winter). Cows may be milked in the stanchion or in a milking room.

Loose Housing—cows are free to move between resting, feeding, and watering areas. Cows rest in free stalls or loafing sheds (manure pack). Cows are usually milked in a milking room.

Open lot—loose housing with feeding and watering outdoors; resting in a shed with free stalls for the milking herd, free stalls or manure pack for dry cows and youngstock.

Enclosed—loose housing with all facilities under roof: usually free stalls, mechanical bunk feeding, and milking parlor. The building may be open front, closed but uninsulated ("cold" housing), or insulated and ventilated for "warm" operation.

Milking Herd Housing

Two types of housing are common for the milking herd: stanchion (or stall) barns and free stall housing. Some loose housing systems are still used but most have been converted to free stalls. Weigh the advantages and disadvantages of each, study the alternatives in each system, consider the initial and operating costs of each and, above all, develop a complete plan before construction begins.

A *free stall barn* is of most interest for the growing herd. Chores are readily mechanized, flexibility in herd size is easily accomplished, and milking parlor milking is most adaptable. Also, bedding requirements are low and liquid manure systems work well.

Problems in a free stall barn include handling manure as a solid, manure spread over solid floor areas, moisture control in "warm" free stall systems, freezing in "cold" free stall systems, and maintaining dirt floors in stalls.

The *stanchion barn* is the most common in the upper midwest, particularly for milking herds under 50 cows. Many herds of this size have grown gradually by adding to an existing barn.

For larger herds there is more interest in building a new free stall facility for milking cows, and using the old barn for calves and heifers.

The stanchion barn permits orderly arrangement of cows in stalls and individual attention to each cow. Barn cleaning and manure hauling are daily chores. Chores are less easily mechanized so labor requirements per cow are generally higher.

Herd size should equal the number of stanchions available.

Three types of stanchions are in use: stanchions, tie stalls, and comfort stalls. See page 9 .

Stanchion

- Requires minimum space
- Less time required "stanchioning" as compared to other types.
- Can be lever operated.
- Cow has less freedom.
- Older cows may have difficulty in getting up and down.
- Heifers with calf should be stanchioned early enough to get used to getting up and down.

Tie Stall

- Provides more cow comfort and freedom.
- Easier for the cow to get up and down.
- Requires more space.
- Higher level of management needed to keep cows clean.
- Extra time required in tying and untying cows.

Comfort Stall

- Similar to a tie stall.
- Cow can reach full width of manger.
- Vacuum and water lines in front of the cow put her in a better position to drop manure when she raises her head.
- Pipes may interfere with tying and untying some cows.

FREE STALLS

Free stalls have become popular in new construction of confinement housing with bunk feeding and central milking. Both stanchion barns and loose housing areas have been converted to free stalls.

- Provide a stall for each animal +5%.
- Do not feed or water in stalls.

In severe climates, consider warm or enclosed cold housing. In moderate climates, free stalls may be used in open-front resting sheds.

The advantages of free stalls over loafing sheds are:

- Bedding costs may be reduced up to 75% compared with a manure pack that is not carefully managed.
- Less labor is required to clean and bed stalls.
- Cows are cleaner, requiring less cow-washing time.
- Resting area requirement is less.
  60-80 sq ft/cow in conventional loafing sheds.
  Down to 50 sq ft/cow in free-stall housing.

But, a free stall resting area will cost more than a conventional open resting area.

Provide box stalls (120 sq ft each) or stanchions to confine cows in heat and for artificial breeding: 1 stall per 20 cows in milking herd. Include water and feeding space. Locate for convenience of veterinarian, and for ease in separating cows at milking time.

Cow Introduction

A few days may be necessary to acquaint the animals with free stall housing. During this period:

- Fill bedded area about half full to prevent cows from kicking the bedding into the alley.
- Cows may rest in the alley; if so, tie the resisting animals (2%-3% of herd, usually older cows) in the stalls for a few nights.

After the animals are acquainted with the stalls, fill the bedded area to almost full height of the curb and add bedding as required.

Some cows familiar with other systems may not adapt to free stalls.

Cleaning

Remove manure from the bedding and curb twice a day. A good time for one cleaning is in the morning right after the animals get up.

Scrape alleys at least once a day. Some operators flush the alleys with water.

A typical cleaning time is 20 minutes per day for a 50-cow herd.

Facilities for handling sloppy manure with little bedding are required. A manure loading ramp and an end gate on the manure spreader, or a liquid manure tank, have proven satisfactory.

Ventilation

Ventilation is essential to prevent condensation. Openings under eaves, ridge vents, and openings in walls provide ventilation.

In severe climates, locate large openings in only one wall to prevent drafts. In moist or cold climates, a solid or insulated roof deck, with vapor barrier below, will reduce condensation. See page 25 .

Alley

Pave the alley, and make it about 10' wide to accommodate cleaning equipment. Slope it 1"/10' in direction of manure movement, but do not provide a crown.

A continuous curb, 8"-10" high, is needed along both sides of the alley. Use pressure-treated plank on edge, or 4"-6" wide concrete. Install a concrete curb if water flushing is used. Some milk markets may not approve plank.

Stall Dimensions

Consider longer stalls for longer building usefulness—cows are getting larger with improved breeding and feeding; a long stall can be made shorter, but a short stall can't be lengthened. Control dunging with neck rails. Greater cow comfort and cows not hanging over curb are additional advantages.

Stall Floor

Stall fill and floor are usually crushed limestone or dirt, plus bedding. Sand or gravel floors are not recommended, especially where liquid manure pumps are used.

Partitions

Partitions start 18"-20" above floor level so legs will not get caught. Slant alley post inward 1' to 2' or set alley post back from alley to facilitate cleaning. Posts may be 4"x4" or 4"x6" wood, pressure preservative treated or 2½" standard pipe.

A low top rail prevents installing a neck rail to control dunging, and may also permit the cows to stand sideways with heads over the partition.

After cows are adjusted to stalls mount a training rail 18"-24" (large vs small breeds) from the front of the stall to help keep stalls clean. Adjust to minimize dunging in the stalls.

Table 2. Dimensions of free stalls

Calves	
0-6 weeks	1½′x3½′
6 weeks to 6 months	2 ′x4 ′
6-10 months	2½′x4½′
Heifers	3 ′x5 ′
Weight, herd average	
1000 lb	3′-6″ x 6′-10″
1200	3′-9″ x 7′-0″
1400	4′-0″ x 7′-2″
1600	4′-2″ x 7′-4″

In pole buildings, stalls may extend to siding, permitting narrower building or wider alleys; stalls will be too short if barn is later insulated and lined.

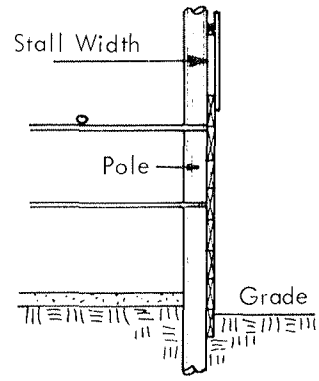

Typical Free-Stall Details

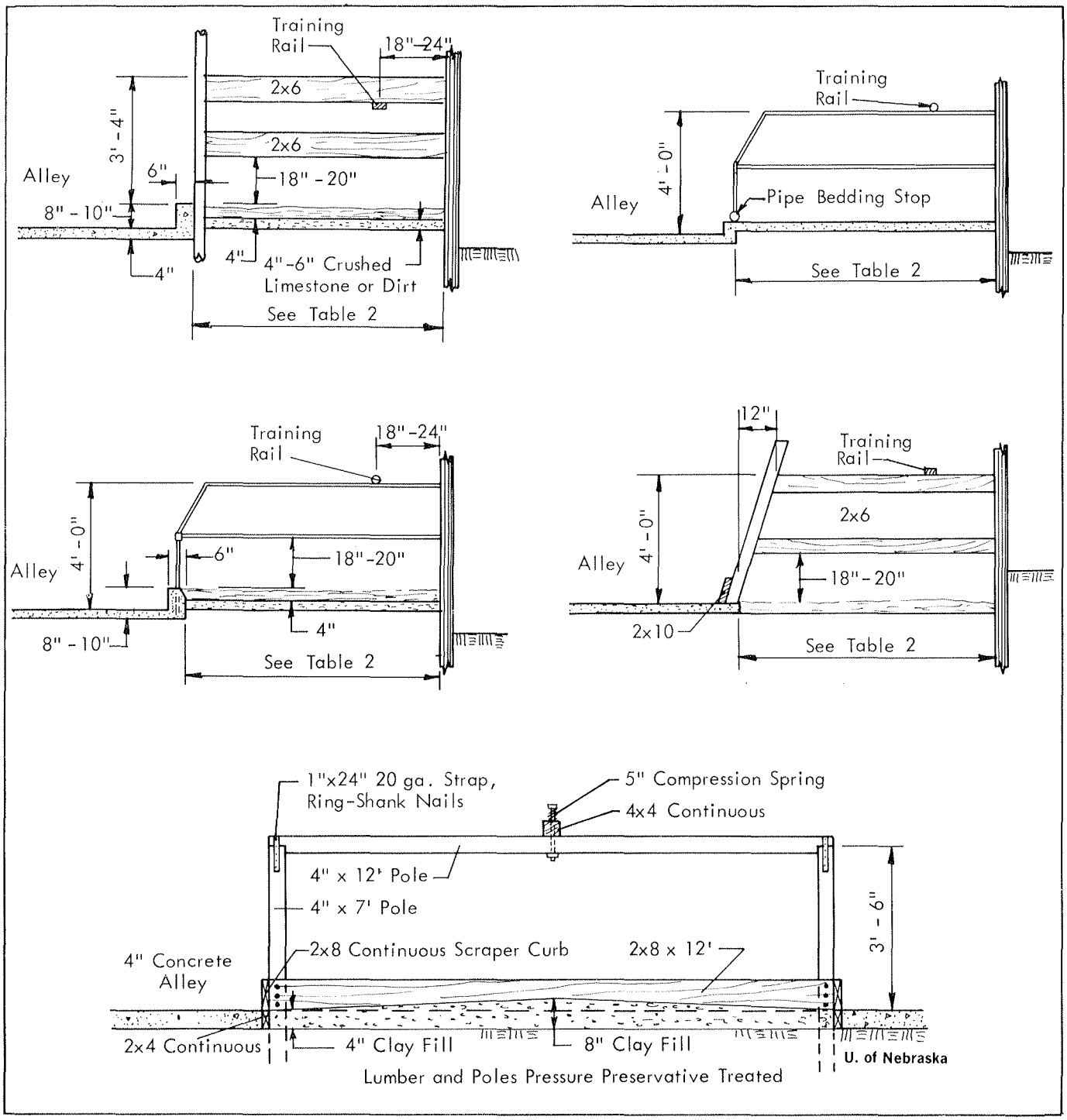

Typical Free-Stall Barn Cross Sections

Stalls are shown 7' long; walls and curbs are assumed 6" thick. Alley width may be adjusted for other stall lengths, and wall and curb thicknesses.

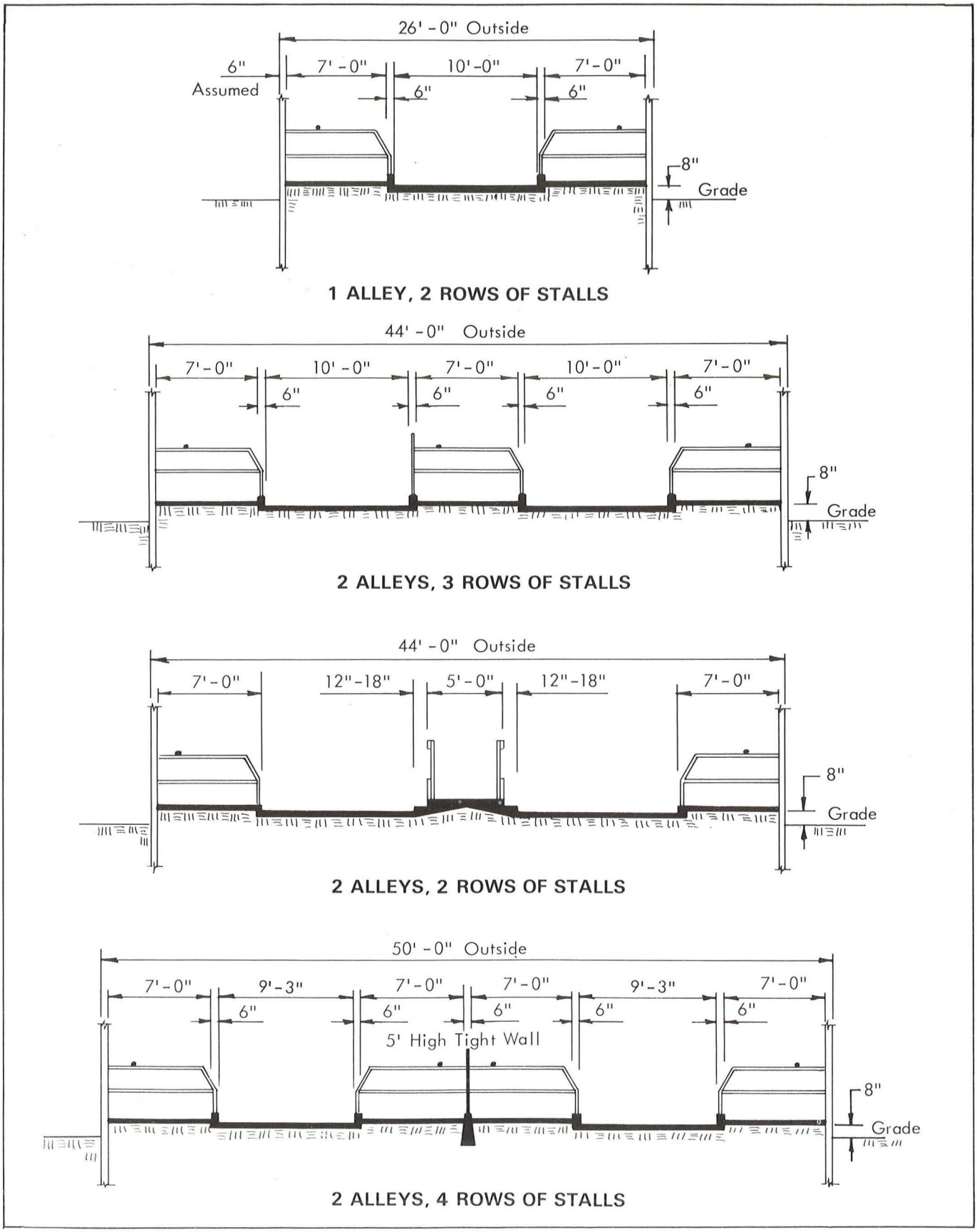

Confined Free Stall Layouts

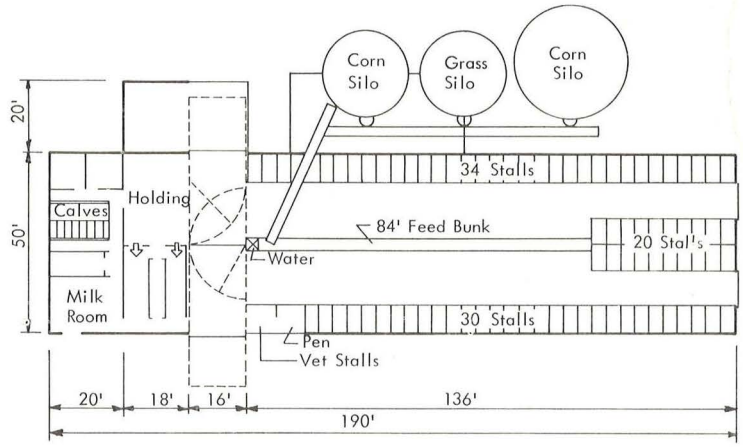

An efficient layout for calves to 6 weeks, and for holding and milking 84 cows, is at the end of a free-stall housing and feeding barn. Dotted lines indicate possible location of a liquid manure tank. Michigan State U. Plan 723-C1-83

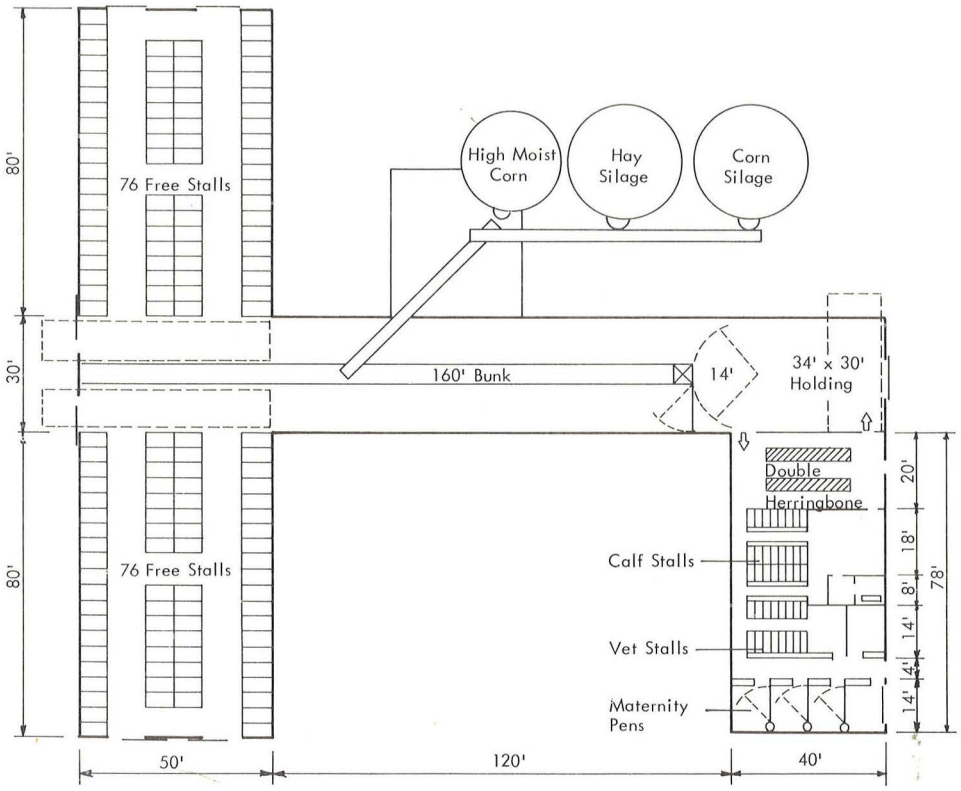

This layout shows free-stalls for 152 milking cows. Other facilities are needed for dry cows, and young-stock. The herd can be divided into two groups on the basis of production so separate rations can be fed to each group. Liquid manure tanks can be located as shown with dotted lines. A side unloading wagon may be used for feeding, permitting silage storage elsewhere on the farm. Michigan State U. Plan 723-C1-86

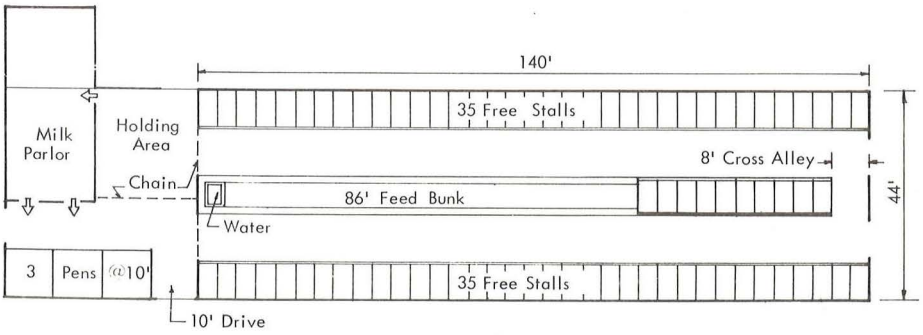

A simple arrangement for free-stall housing for 80 cows. Other housing will be needed for calves, young-stock, and dry cows. Bunk may be filled mechanically or from feed wagon.

FREE STALL OPEN LOT

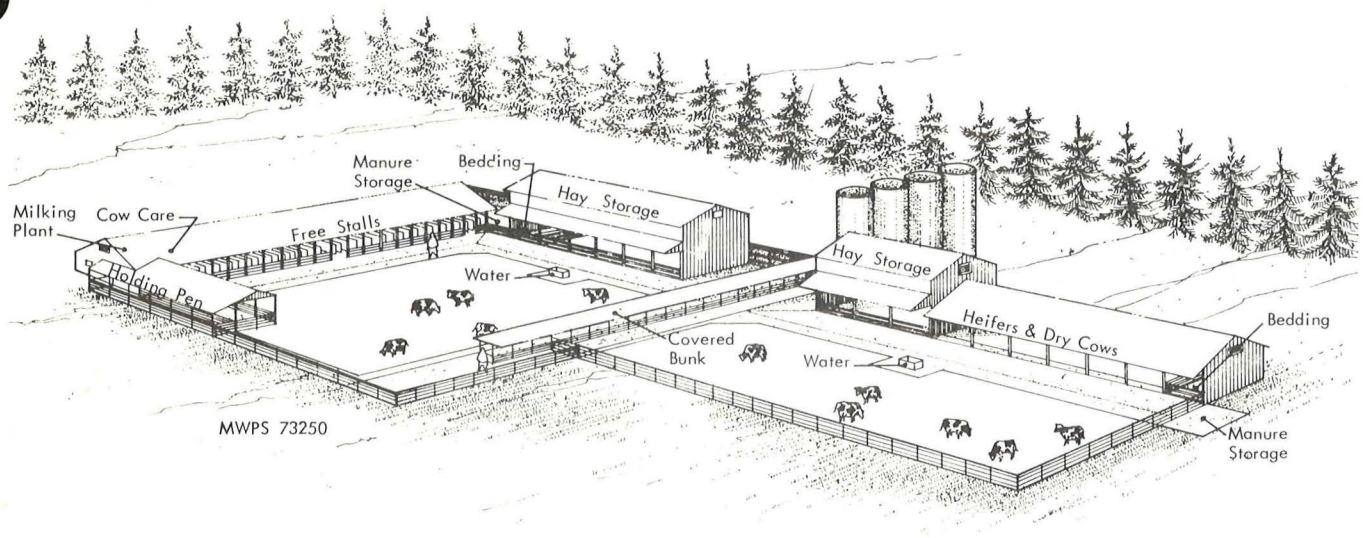

Planning Procedure

1. Compute the areas needed, both for now and for future expansion.
2. Select a site.
3. Sketch tentative layouts.
4. Establish traffic routes for animals, cleaning equipment, supply trucks, etc.
5. Compare several trial layouts with the recommendations given. Any layout will require compromises.
6. Have plan approved by marketing and public health authorities.

Building Orientation

Locate structures to avoid continuous shadows in the lot, especially in freezing climates. Snow and frozen manure accumulate on the north side of buildings, bunks and silos.

Face the long, open side of buildings away from prevailing winter winds. Winter sun will provide drying on the south side, and will heat west walls and roof slopes.

Housing opening to the south will have maximum drying under the eaves, but will have minimum heating at the back wall. If it opens to the east, it will have maximum rear wall heating, and also better wind protection in areas with westerly or southwesterly winter winds.

The hay self-feeding area (paved) may extend back into the building as the winter progresses. Maximum drying will occur with the opening to the south or southwest.

Locate an uncovered holding pen where it will receive maximum sunlight and be sheltered from the wind.

The milking plant must be accessible to the milk truck, grain delivery, and next to the holding pen. Provide stanchions, or at least a catch pen and headgate, near the milking plant for veterinary or other individual cow care.

Site Selection

Arrange layout on a well-drained site. Provide a 4% (½"/ft) to 6% (¾"/ft) slope preferably away from prevailing winter winds, usually south or east. Slopes over 10% (1¼"/ft) may erode in unpaved lots. A slight north or west slope can usually be graded to a south or east slope. Consider moving from present lot site to obtain desirable slope. Complete land grading for buildings and yard before starting construction.

Drainage

Use road ditches or terraces as drainageways to intercept surface water from outside the lot. Slope lots away from buildings and feeding lines.

Use paved aprons along buildings and bunks, and around waterers, to control drainage inside the lot. The following slopes are suggested:

- 1"/ft away from bunks and waterers. This slope is nearly self-cleaning.
- ½" to ¾"/ft away from buildings; cross drainage in aprons.
- ¼" to ½"/ft slope along drainageways.
- ¼"/ft floor slope in buildings toward drains or open front.

Mound unpaved lot areas and drain toward pavement or outside the lot.

Lighting

For open-front buildings, some artificial lighting is desirable (100 watts per 500 sq ft).

Some codes require windows or skylights in open buildings 40' or more deep to provide natural light along the back wall. There are some disadvantages: condensation on the cold surfaces, cost, loss of dark areas for cows to get away from flies, extra heat in the summer if windows face west.

For closed buildings, provide 100 watts of artificial lighting per 500 sq ft of floor area.

Paved Yard Areas

Pavement keeps the cows out of deep mud and permits easy cleaning of heavy traffic areas. Pave around waterers, along buildings and feed bunks, the holding pen, and animal routes between these areas. Some states require a minimum paved area of 75 to 100 sq ft/cow with open lot housing. See page 76 for pavement construction. Traffic routes for cows and vehicles should be at least 12' wide. The road between two parallel fenceline bunks may be up to 30' wide and sloped to the center to provide drainage and space for plowed snow. A turn-around area is required.

Unpaved Yard Areas

Unpaved yard areas should be well graded and drained. They provide exercise space during part of the year and can be used for snow and manure storage during winter months. Cows may need to be fenced away from muddy unpaved areas.

Summer exercise lots are common for herds not put on pasture. Alternate herd between at least two lots with a total area of about 1 acre per 24 cows.

Bedded Resting Area (manure pack)

A conventional loose housing resting area with a manure pack is adequate for youngstock or dry cows but is not recommended for the milking herd. Space Required:

40 sq ft/heifer.
50 sq ft/cow in southern zones.
60 sq ft/cow in northern zones.
75 sq ft/milking cow required in some areas.

Planning and Construction

Do not feed or water in the resting area.

Minimize cow traffic across the resting area by having only outdoor access between the resting area and other areas. Provide enough doorways to the yard to prevent concentrated traffic lanes.

Because the open side is relatively unprotected, the shed should be at least 30' deep in moderate climates and 40' deep in severe climates, in addition to any bedding storage.

Foundations, walls, and ceiling or roof height must be designed for a 3'-4' manure pack. A minimum door opening height of 10' is recommended.

Floors can be well-drained earth about 12" above outside grade and sloped toward the open side, or paved for easy cleaning if used in the summer.

A paved apron should extend 4' into the building and preferably 16'-20' outside the eaves. Provide eave troughs.

Manure Pack Management

Start a manure pack before freezing weather to permit fermentation to start. Place 12"-18" of bedding in the resting area; shavings or corn cobs make a good base. The heat of decomposition will maintain a warm pack.

Clean the resting area before the start of the fly season (air temperatures at 65°F). Keep it dry, and clean at least weekly to interrupt the fly cycle until killing frosts in the fall. A pack is not recommended during the fly season. If the resting area is used in the summer, a concrete floor is recommended.

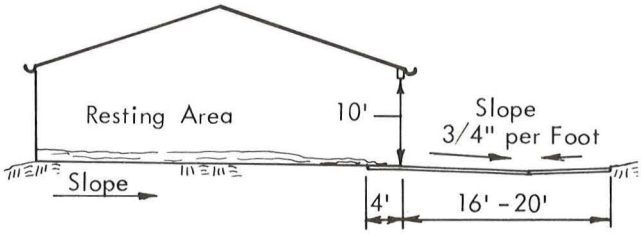

Feed Center

Locate the feed center convenient to the feeding area, and away from cattle traffic. Avoid blocking summer breezes. Consider snow drifting. Provide all-weather access. Storage and distribution of ground feed is usually at the milking plant.

Shade

Allow 20-25 sq ft/head—more for hot climates. North/south orientation permits sun drying under a long narrow shade. Permanent shades should be on a graded rise for drainage and have 10' minimum clearance. Where covered bunks provide shade, resting cattle may interfere with feeding.

STANCHION BARN

Major dimensions for housing cows in stanchions are given on the next few pages. Check with your barn equipment supplier before starting construction, so that dimensions match equipment to be installed. And, as with other dairy installations, get approval from health and marketing authorities.

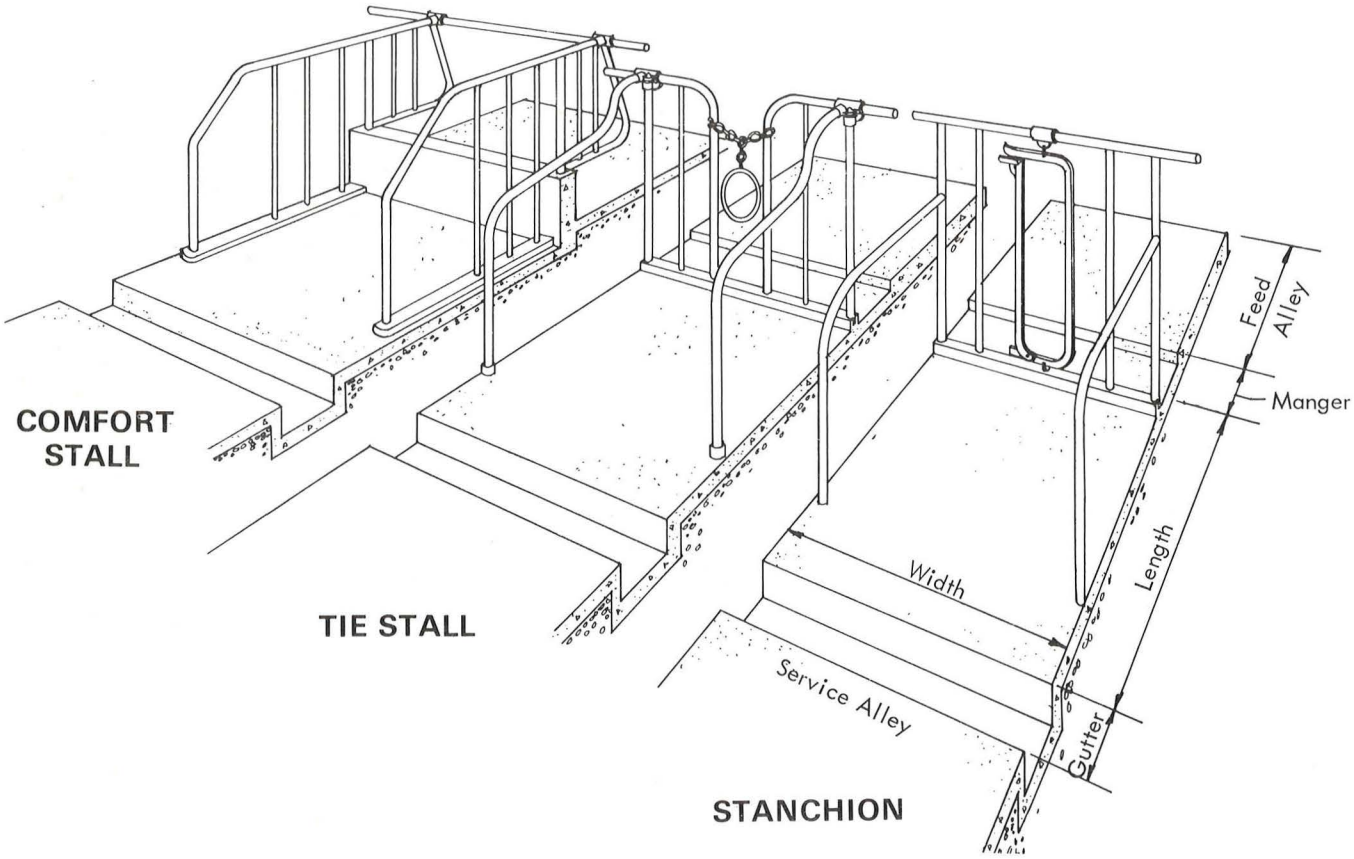

See page 2 for a comparison of the three stall types.

Table 3. Sizes of cow stanchions (using electric cow trainers)

Weight of Cow	Stanchions Width	Stanchions Length	Comfort Stalls Width	Comfort Stalls Length	Tie Stalls Width	Tie Stalls Length
1200 lbs	4'-0"	5'-4"	4'-3"	5'-7"	4'-6"	5'-10"
1400 lbs	4'-3"	5'-8"	4'-6"	5'-11"	4'-9"	6'-2"
1600 lbs and over	4'-6"	6'-0"	4'-9"	6'-3"	5'-0"	6'-6"

Table 4. Stanchion barn dimensions

	Dimensions Minimum	Dimensions Recommended
Alleys: Feed alleys for sweep in mangers[1]	3'-6"	4'-4'-6"
Cross alleys (up to 6' wide if cow exit)[1]	3'-6"	4'-6"
Service alleys for barn cleaner	5'-0"	6'-0"
Service alleys for manure spreader	7'-6"	8'-0"
Mangers: Width—Cows under 1200 lbs	20"	22"-27"
Cows weighing 1200 lbs and over	22"	24"-27"
Gutters: Width[2]	16"	16"
Depth—stall side[3]	10"	11"-16"
Depth—alley side	8"	11"-14"

1. A five-foot wide cross alley is desirable for large feed carts.
2. Or as required for barn cleaner.
3. Gutter details vary with operator preference. With cow platform and service alley at the same level it is easier to move across the gutter. An 11" depth provides adequate capacity for daily cleaning. Many operators prefer having the cows at a higher level for better showing; effective depth of gutter is depth on service alley side.

Cross-Sections

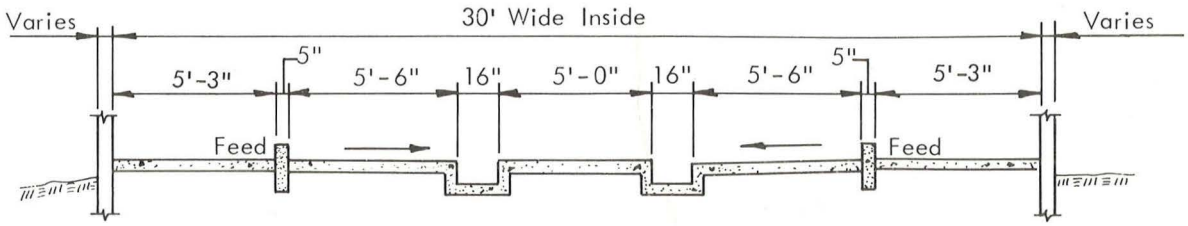

Minimum recommended dimensions for a 1300 lb cow. Barns 30' or less wide are encountered in remodeling but are definitely not recommended for new construction.

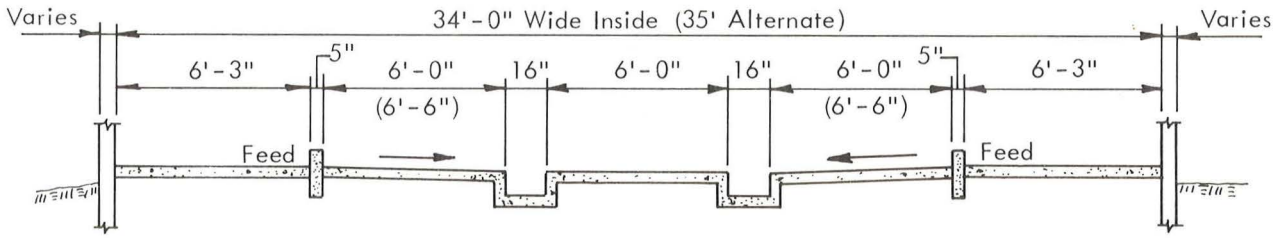

FLAT FEED ALLEY—COWS FACE IN

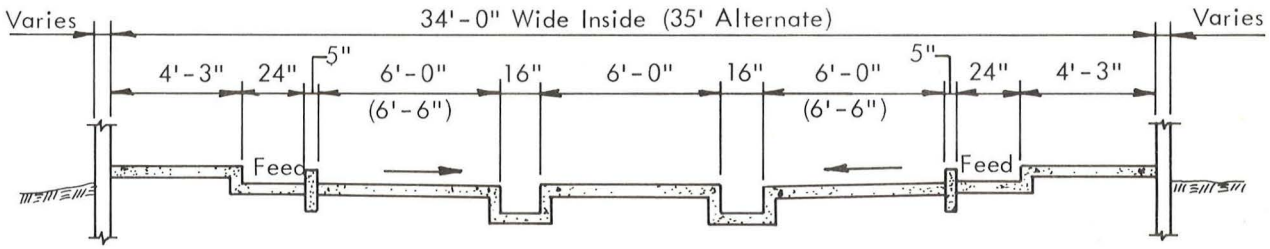

STEP MANGER—COWS FACE OUT

New barns 36' wide outside may vary from 34'-35' wide inside. Vary cow bed length as shown in parentheses. Flat alley and step manger are shown as options.

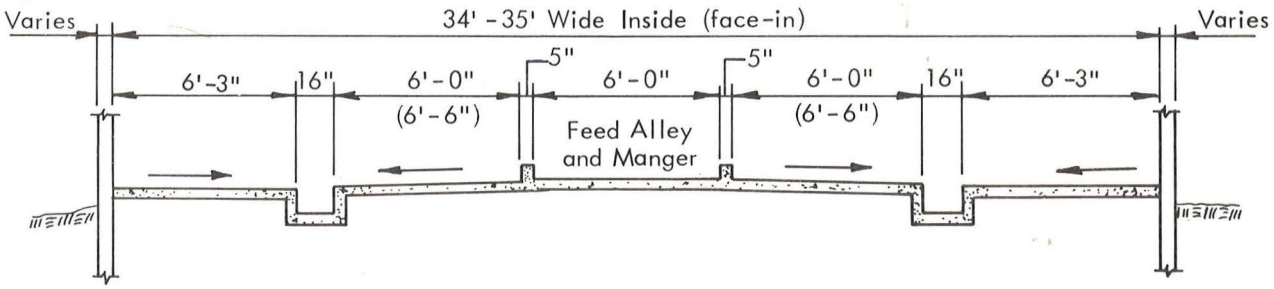

FLAT MANGER—COWS FACE IN

A face-in barn is more convenient for feeding, especially with mechanical distribution system. Moving cows in and out is more difficult as is arranging a convenient pen section at the end of the barn. If the barn is less than 34' wide, reduce width of cow beds—milk markets may require 6' between gutter and wall to reduce manure splatter.

Typical Layouts

The layout is designed for 40 milk cows, 12 calves 1½ to 10 months old, and 5 calves under 1½ months old. The 1-story barn is suitable for baled or chopped hay handled in large carts. U. of Wisconsin Special Bulletin #4, 1963.

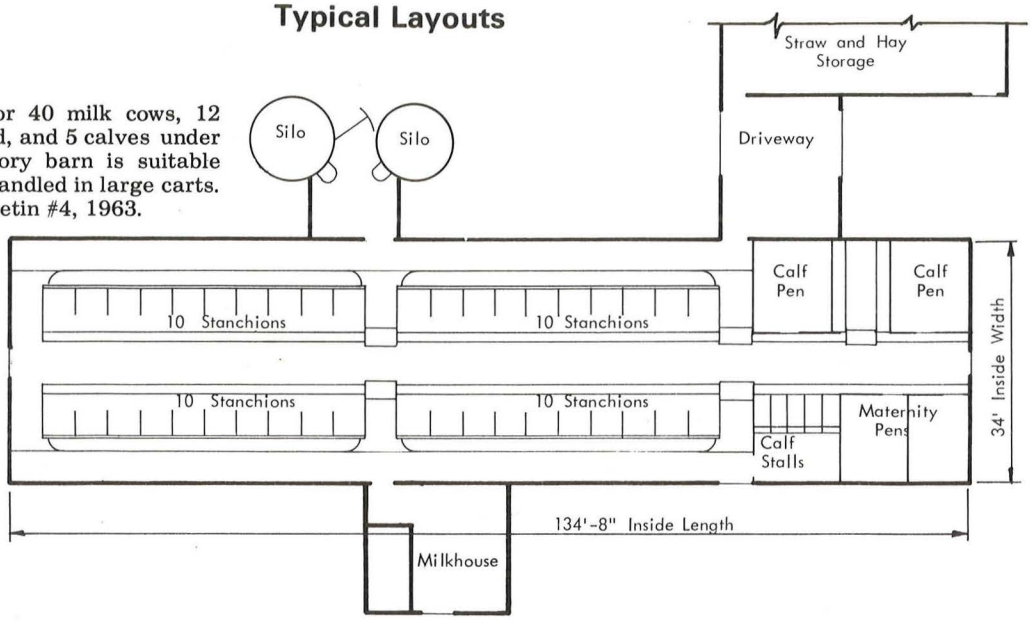

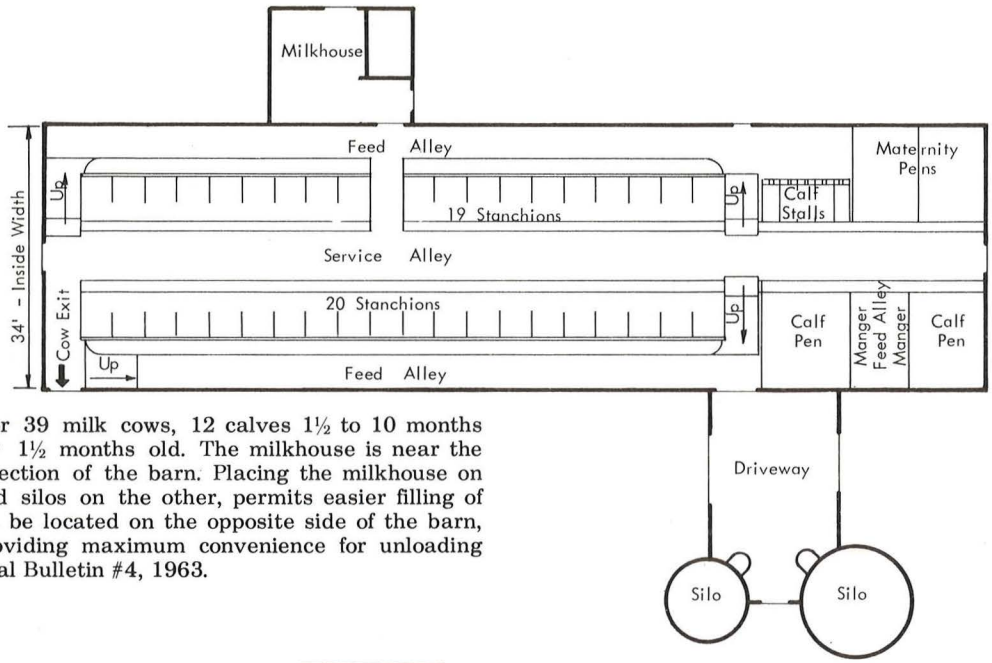

This barn is designed for 39 milk cows, 12 calves 1½ to 10 months old, and 5 calves under 1½ months old. The milkhouse is near the center of the milk cow section of the barn. Placing the milkhouse on one side of the barn and silos on the other, permits easier filling of the mow. The silos could be located on the opposite side of the barn, but with a drive-thru providing maximum convenience for unloading feed. U. of Wisconsin Special Bulletin #4, 1963.

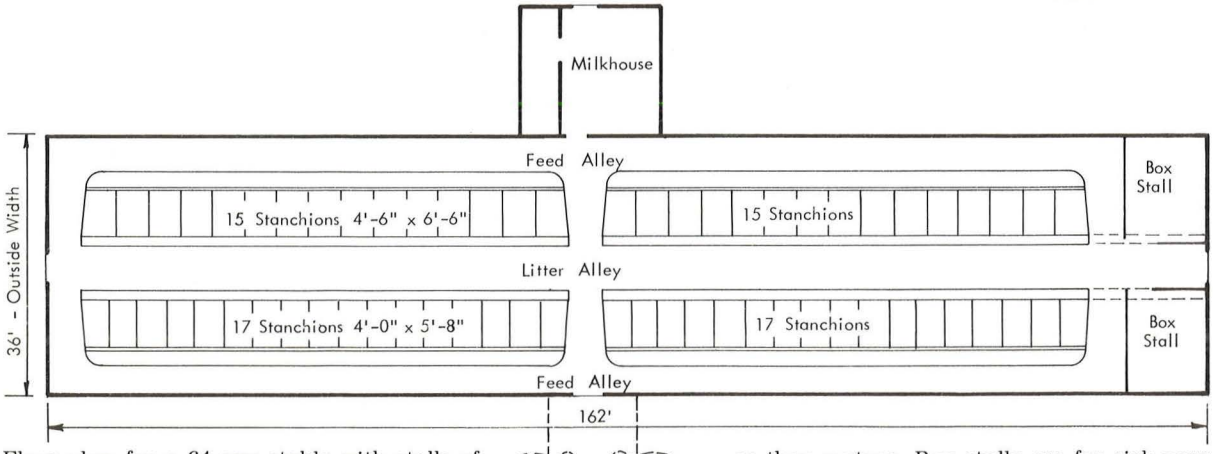

Floor plan for a 64-cow stable with stalls of two sizes. This arrangement is suitable for the typical herd of large breeds. Animals can be moved from small to large stanchions as they mature. Box stalls are for sick cows or maternity pens. Provide separate facilities for youngstock and calves. U. of Minnesota Bulletin M-13, 1968

Outside Silage Feeding Layouts

Outside silage feeding offers relatively simple mechanization of one feeding chore. Milking and dry cows, and heifers, can all use the same bunk if the lot is divided. Consider this system if you are going toward a high-silage, low-hay ration.

Plan for future barn expansion, convenient filling of silos, and additional bunk length.

Locate long axis of bunk in direction of slope and north—south if possible, especially in severe climates. Put bunk south of the silos to avoid accumulation of ice and frozen manure.

Leave 15' minimum clearance between the side of the bunk and a fence or building and 10' minimum between barn and silo.

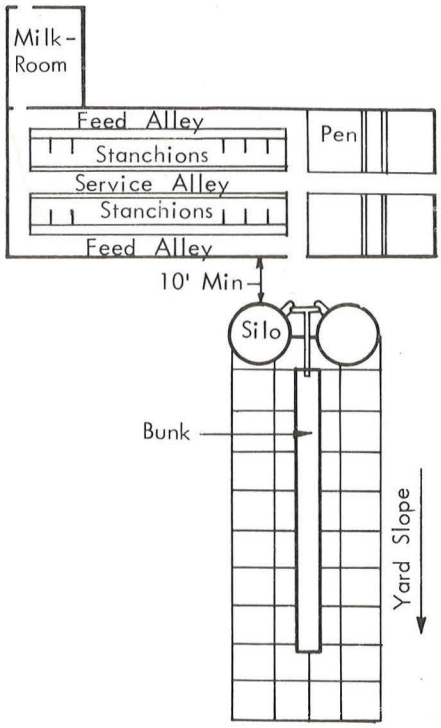

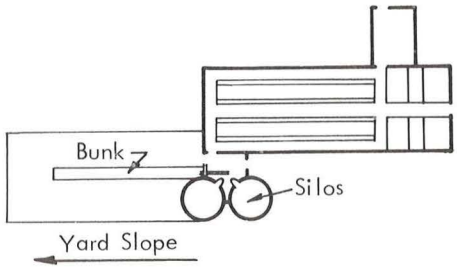

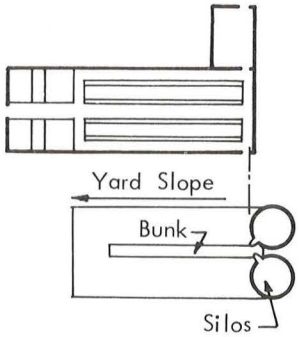

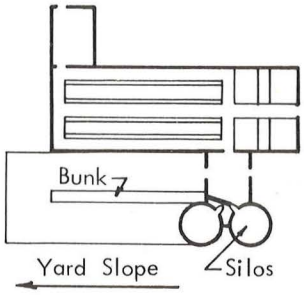

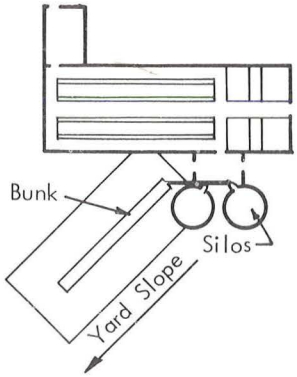

Bunk placed at angle to permit easier silo filling

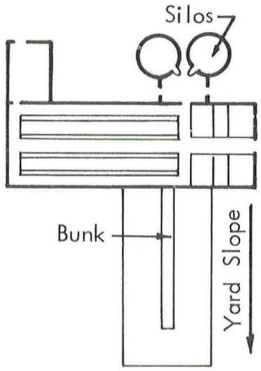

Conveyor can also drop feed at feed alleys

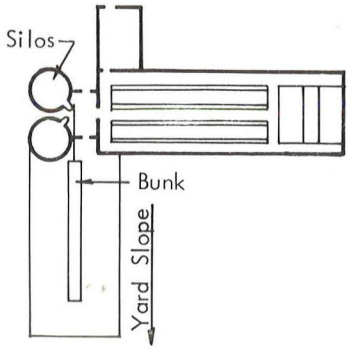

Locate silos on end of barn only if any future expansion can be done from the opposite end of barn

Milkhouses

Location

Locate the milkhouse on the clean side of the barn on a well-drained site. Provide access for the milk truck. Consider putting the milkhouse near the center of the length of a long barn.

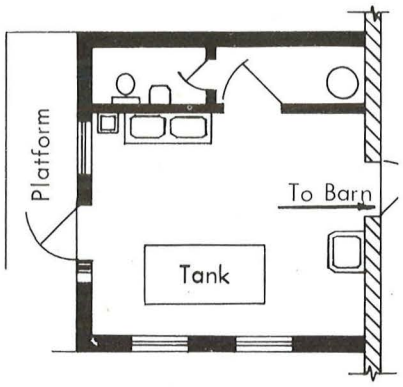

Planning

See page 16 for planning and construction details for a good milkhouse.

Ventilation

A milkhouse may be ventilated with an intake fan, or with an exhaust fan if intakes are provided that prevent drawing air into the milkhouse from the toilet room or the barn.

Vestibule

Most codes no longer require a vestibule. Where a vestibule is required, its size, lighting, and ventilation are usually also specified. Common requirements are: 5'-6'' minimum length, one 100-watt light or equivalent, and a gravity ventilation vent in the ceiling if the vestibule is enclosed.

Milking Room

A milking room can be added to an existing stanchion barn. The arrangement will depend on present milkhouse location and access to outside yards. The milking room makes milking easier, more efficient, and perhaps more sanitary.

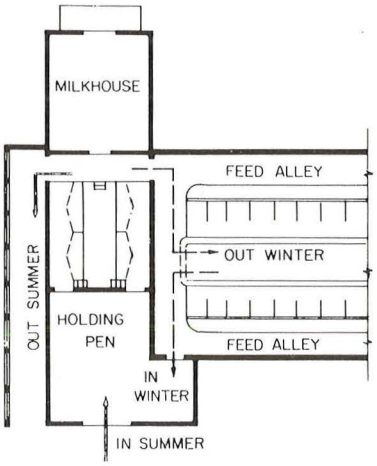

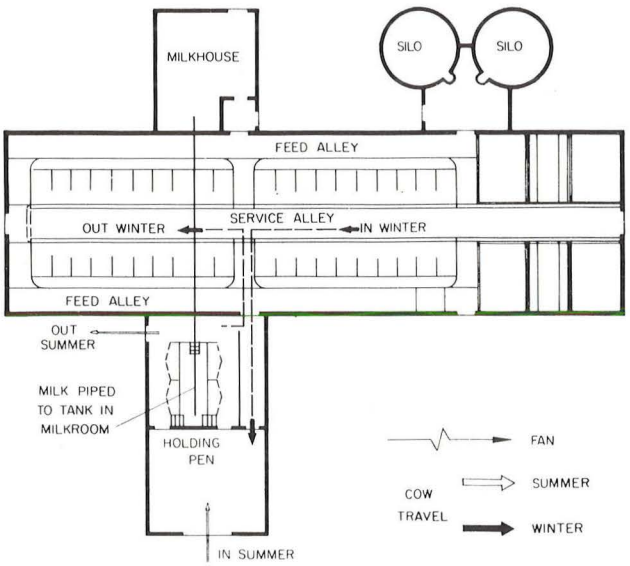

MILKING PLANT

Before starting construction, installing new equipment, or undertaking remodeling:

Contact your milk receiving station representative. He will tell you which marketing and public health standards you will have to meet. Check dimensions specified by your milk code.

Many dimensions will depend upon the specific equipment selected. The type of stall, size of cows to be milked, and variations between manufacturers all affect the size of the milking room. The size and type of milk tank, compressor location, and the kind of washing and milk handling equipment will affect the size of the milkroom.

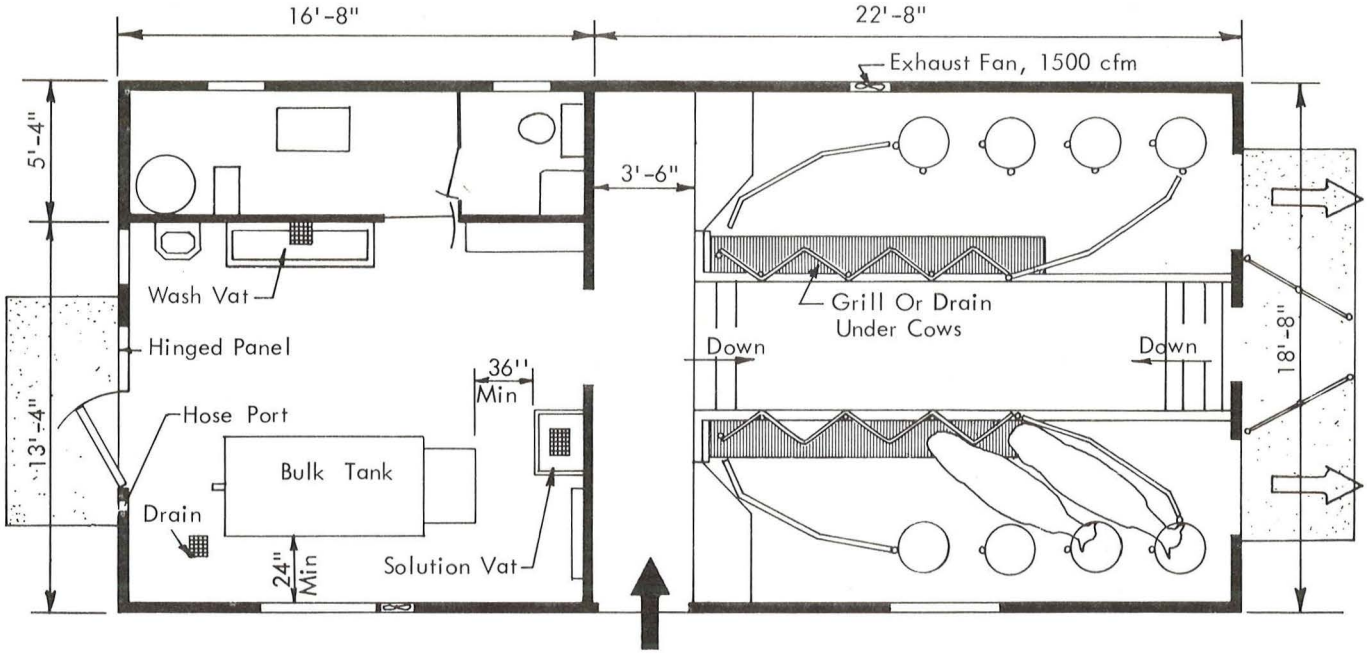

Heat

Heat the milking room, milkroom, toilet, and utility room to prevent freezing in the coldest weather. Provide supplemental heat, if necessary, to maintain a 50° temperature during milking and milkroom operations. Heat from the cooler compressor, water heater, and separate heaters or furnaces can be used. Equipment heat should be exhausted in warm weather.

Heat supplied by cooling milk can be utilized to heat the milking parlor and/or milkhouse. Cooling 100 pounds of milk from 98° to 40°F supplies about 4,800 Btu of heat—about the same as a 2KW electric heater running for 1 hour. A system to utilize this heat can be built into most facilities at very little extra cost. Put the compressor, vacuum pump, water heater and furnace in one utility room. Connect the furnace blower to come on when the compressor starts. Connect the furnace to a thermostat in the milking parlor (or milkroom) so when milk heat is insufficient the furnace will come on. An insulated door to the outside can be opened in summer so the compressor heat will be blown outside. (See compressor detail page 15)

Ventilation

Ventilate the milkroom with a 1000 cfm intake fan to assure that air is not drawn from the milking room. Locate the fan so air is drawn in from the cleanest and most dust-free side of the building.

Air outlets can be in the utility room, toilet room, and the wall opposite the fan.

Ventilate the milking room with an exhaust fan, with inlets in the wall on the opposite side of the building, or from the attic.

Air outlets and inlets should be screened and have a total area of one square foot per 700 cfm fan capacity. Size fans in both the milkroom and milking room to move 6 air changes (6 times room volume) per hour in winter.

For summer ventilation, use fans of 12 or more air changes per hour capacity, or screened windows, or both. Attics should be vented with screened louvers and/or eave vents.

Interior Walls

Interior walls should be a light color, washable, and kept clean. The lower 4' should be impervious to water. A pipe railing 36" above the floor and 4" from walls will help protect painted surfaces where cows pass in the milking room.

Wall Material	Ease of Cleaning	Resistance To Abrasion	Stains	Acid	Impact
Ceramic Wall Tile	E	E	E	E	F
Sheet Alum. on Plywood	G	F	F	F	G
Cement Asbestos Board	F	E	G	E	F
Structural or Salt-Grazed Tile	E	E	E	E	G-E
Cement Finish	E	G	E	G	F
Glazed Concrete Block	E	G	E	G	F
Paint					
Oil or Latex	G	P	G	F	F-G
Epoxy	E	E	E	E	E

E=Very Good to Excellent G=Good F=Fair P=Poor

Exterior Walls—Insulation

Insulation reduces condensation on inside room surfaces, and conserves heat. A vapor barrier is required on the inside (warm side) of walls and ceilings. Polyethylene in frame construction, vapor-proof paints on masonry, etc., prevent moisture from penetrating insulation and reducing its effectiveness.

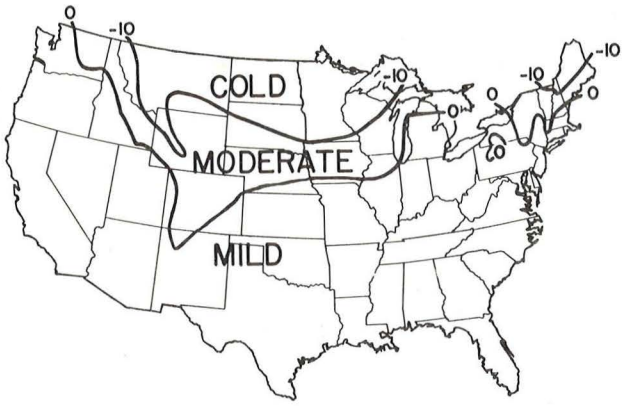

CONSTRUCTION	COLD	MODERATE	MILD
Sidewalls (Vapor Barrier Required)			
Wood or steel frame	2"-4" insulation	1"-2" insulation	½" insulation
Cavity wall, 4" tile, or cinder or light-weight block	4" cavity filled with insulation	2" cavity filled with insulation	----
8" cinder or light-weight concrete block, cores filled	2" insulation	1" insulation	----
8" concrete block, cores filled	3" insulation	2" insulation	----
6" concrete tilt-up sandwich wall	2"	1½" foamed plastic insulation	1"
Ceiling (Vapor Barrier Required)			
Fill or batt insulation	4"-5"	2"-4"	0-2"

Floors

Slope concrete floors and gutters ¼"/ft to all drains. For a non-skid surface, work carborundum or aluminum oxide aggregate (¼ to ½ lb/sq ft) into the surface of the floor before final trowelling. In the operator's area, provide a 96 sq in. sediment type water seal drain with a 4" outlet.

Floor and wall, or floor and curb, junctions should be rounded to facilitate cleaning.

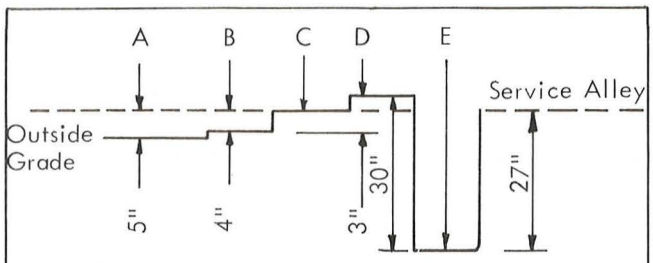

A. Outside Platform
B. Holding Pen, Return Lane, & Exit Across Alley
C. Service Alley, Utility & Milkrooms
D. Cow Platform and Return Lane
E. Operator Pit

Floor levels for milking plant

Water Supply

An adequate pressure water supply is required and should comply with local codes. Provide warm water for washing and sanitizing udders, and water under pressure for floor washing.

Mixing valves are recommended for hot and cold water and for adding bactericide for washing udders and sanitizing teat-cups.

Water Heater Capacity (Minimum)

Bulk tank up to 400 gal—50 gal heater; bulk tank over 500 gal—80 gal heater. An 80-gallon water heater is minimum with an automatic pipe-line washer.

Compressor

If the compressor is remote from the bulk tank, provision to control the condenser cooling air for use in winter heating can be provided as shown below. This arrangement permits compressor heat to be blown out of the building in summer.

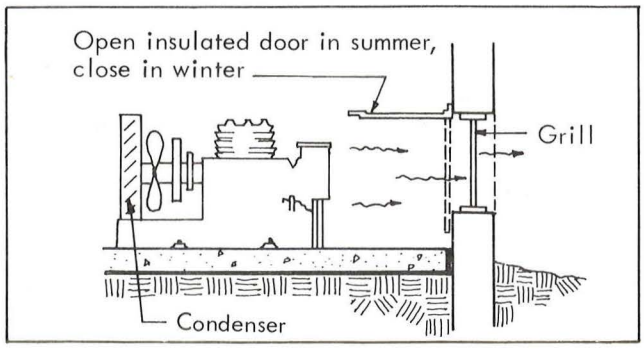

Utility Room

A separate room is desirable in the milking plant for the vacuum pump, electric entrance box, heating plant, hot water heater, bulk tank compressor, and fuel storage. A tight-fitting door between utility room and milkroom is required if coal is used as a fuel. A flame-type water heater and air space heater require a chimney. Good lighting, ventilation, and a floor drain are required. Heat generated from this equipment can be used to heat the milking plant.

Toilet and Washroom

A washroom with hand washing facilities, toilet, and optional shower is recommended in the farm milking plant. This room cannot open directly into the milkroom, but may open into a vented vestibule, the milking room, or the utility room. Provide heat in severe climates.

Milking Room

Floors and Drains

Allow 4" to 6" toe space next to the milking stalls, or 8" if a bull nose gutter is used next to the milking stall.

A curb may be placed along the edge of the stall floor next to the operator's area. Bucket or swinging milkers require a cut-out curb in front of the udder. The curb may be less than an inch high if the edge of the curb extends 3" outside the stall pipes toward the operator.

Lighting

A single row of 40-watt fluorescent lights over each cow platform, and a single row down the center of the operator's alley, will provide approximately the 20 footcandles of general lighting recommended by the American Society of Agricultural Engineers.

Incandescent floods or spots can provide local lighting at the cows' udders.

Doors

Provide a solid, tight-fitting, self-closing door between the milkroom and the milking room. A door which swings both ways is convenient, if permitted. A single-action door should open outward from the milkroom. A vestibule is not usually required where the cows are not housed in the area where they are milked. Cow entrance doors are opened by the operator. Exit doors are often cow operated.

Concentrate Feed Storage

If cows are fed in the milking room, feed storage should be dust tight, dry, rodent proof, and arranged for convenient filling. Dust in the milking room or milkroom is objectionable. Arrange for hand or metered feeding at each milking stall.

Milkroom

Provide enough space for all equipment, and adequate clearances around the bulk tank. The bulk tank should hold 3 milkings at peak production with every day pickup. Increase to 5 milkings capacity with every-other-day pickup.

Minimum floor area for milkroom is about 200 sq ft. Most important are space to work, clearance around equipment, and room for equipment.

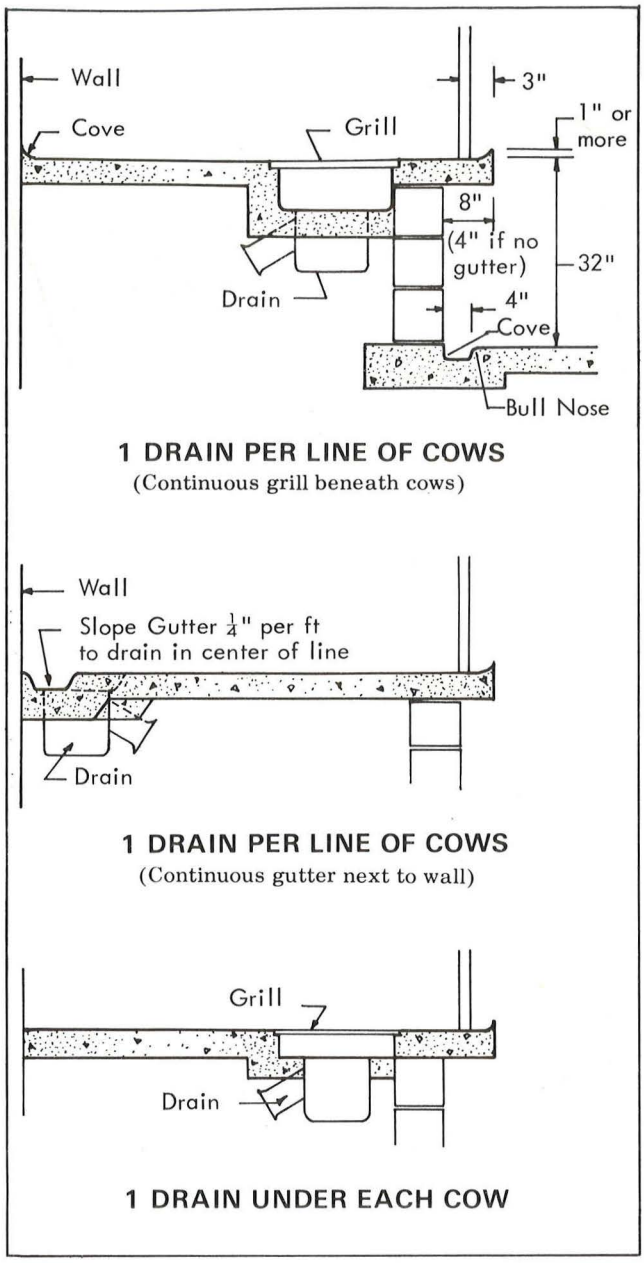

Optional drain lines used in milking room

Working Space Around a Bulk Tank

Provide at least the following clear distances between the bulk tank and equipment or a wall:

24" from the rear end and side of the tank.
36" from the outlet valve and front (working) side.

Some codes permit smaller distances for remodeling.

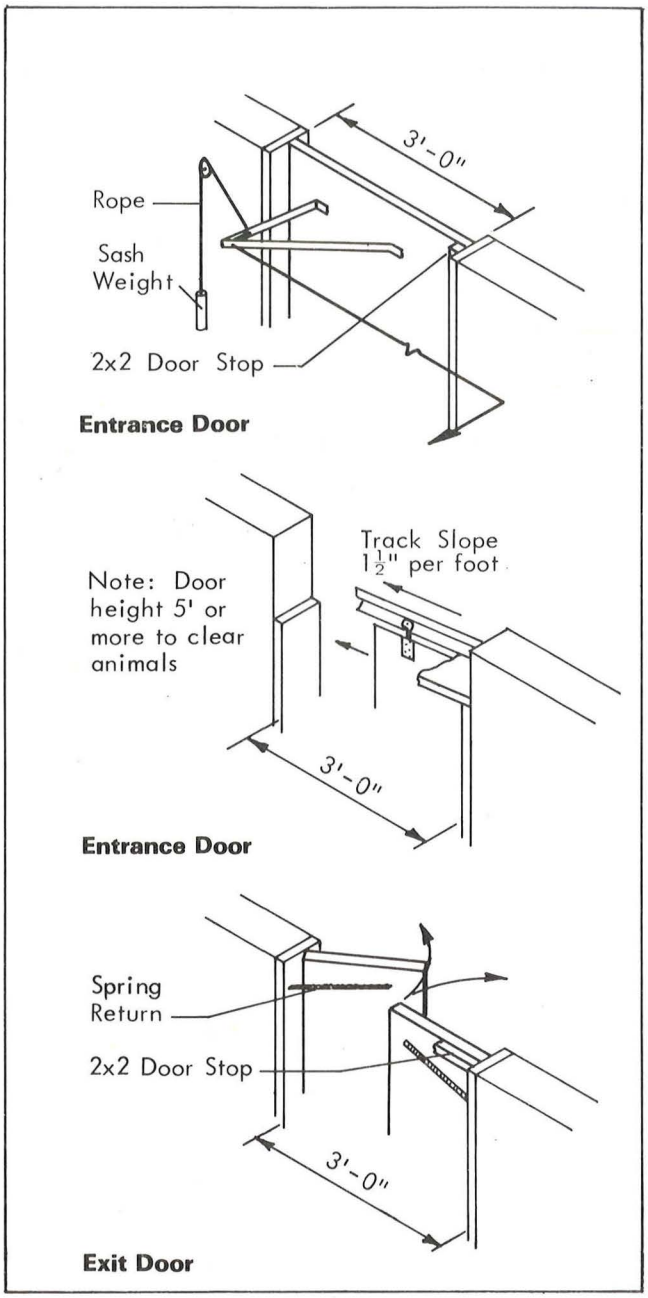

Entrance and exit doors for cows from milking room

Loading Platform

Provide a concrete loading platform, or slab on grade, about 4'x8' and convenient to the service drive. Provide a self-closing hose port far enough off the floor to permit starting the hose through the port without touching the floor.

Doors

Provide an inside door and a combination screen and storm door for the milkhouse and milking parlor. Some codes will not allow a direct door from the milkhouse to a toilet. In this case the toilet door should open into an office or utility room. If the door opens to an unheated vestibule pipes may freeze.

Many bulk milk tanks are wider than normal doors. Put in a large double door or an insulated removable panel beside a regular door.

Floors and Drains

Provide a drain under the wash vats and a drain 24" from the bulk tank outlet valve. Avoid drains in traffic routes.

Floors under bulk tanks should be concrete reinforced slabs independent of the rest of the floors. Slope slab 1"/ft from under tank to both sides. Milkhouse and parlor may have to be elevated to provide adequate fall to waste disposal system.

Lighting and Outlets

Rows of single 40-watt fluorescent lights spaced 5' apart will provide approximately the 20 foot-candles of general lighting recommended by the American Society of Agricultural Engineers. In addition provide swivel electric light outlets to the side of the tank openings and not directly over the tank to light the inside of the bulk tank. Provide lights over the wash vats and loading platform.

Provide electrical outlets for water and space heaters, milk cooler, ventilation fans, tank unloading pump, cleaning equipment, and for general use at counters. Provide grounding conductors to all electrical equipment.

Place entrance box in the utility room. Consult local electrical codes.

Holding Pen

This area should have 12 to 15 sq ft paved for each cow milked. A covered or partially covered area protects the animals from rain and snow, helps prevent slipping, and allows time for water to drain off cows. But, an open area is exposed to sun drying and better air circulation.

Holding pens are cleaned daily. Expect half a load of manure per week per 30 cows.

Slope the holding pen floor away from the milking room entrance. If steps are used, use a 6"-8" rise with a 24" run for small breeds or 30" run for large breeds. Ramps should have a slope of less than 2"/ft. Steps are preferred to a ramp at the entrance for better cow footing. A ramp may be preferred at the exit to avoid damage to dew claws if it can be kept dry to avoid slipping.

Milking Plant Layouts

Typical layouts with approximate space requirements.

Determine equipment to be installed before building or remodeling. Detailed dimensions must follow manufacturer's specifications.

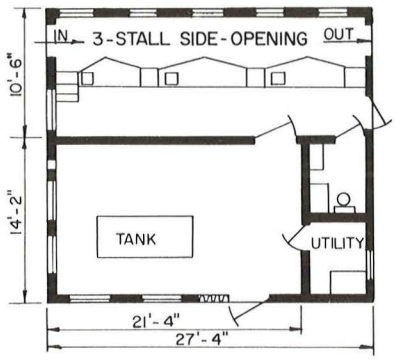

MWPS 75242

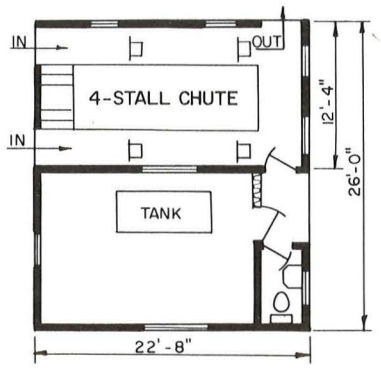

MWPS 75244

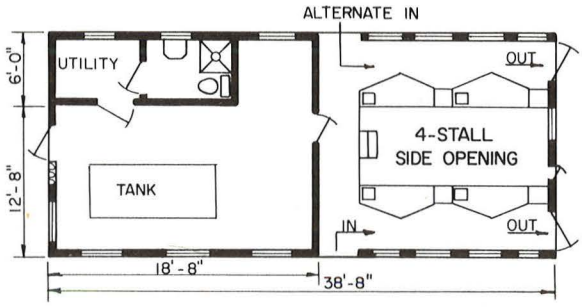

MWPS 75245

Table 5. Cows milked per hour with a C.I.P. pipeline milker

Type of Milking Room and Stalls	Midwest Plan No.	No. of Operators	No. of Milking Units	Average No. of Cows Milked/Hour
Side-Opening Gate Stalls				
3 stalls, one side	75242	1	3	25-30
4 stalls, one side	75242	1	4*	25-30
2 stalls, each side	75243, 75245	1	4*	30-35
3 stalls, each side		2	6	45-55
4 stalls, each side	75245	2	8*	55-65
Chute or Lane Stalls				
2 stalls, each side	75241, 75244	1	2	25-30
3 stalls, each side		1	3	30-35
Herringbone Stalls				
4 stalls, one side		1	3	28-34
4 stalls, each side	75246	1	4	35-45
8 stalls, each side		2	8	70-80

* Only 3 units per man will operate at any one time.

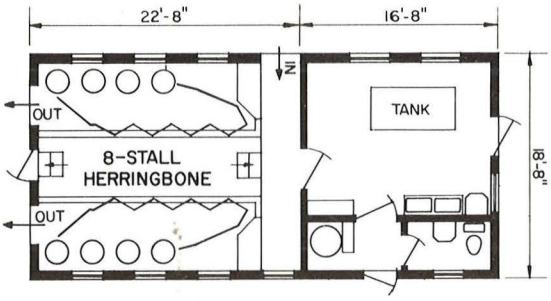

MWPS 75246

CALF HOUSING

With calves on whole milk, and especially in cold climates, it is convenient to have maternity and calf pens near the milking plant.

With calves on milk replacer, the pens can be away from the milking herd. But, stanchions, or at least a catch pen and headgate, must be handy to the milking plant for diverting cows for veterinary or other individual care.

Warm Barn

A warm barn is usually preferred for more than 10-15 calves. Maintain temperatures between 40° and 50°F. Walls should have insulating value, R, of 10 to 12. Ceilings should have insulating value, R, of 18 to 20.

Calf area should be partitioned off from milking herd so adequate conditions can be maintained for the small animals. In a warm barn calves can be tied in individual stalls to reduce floor area per animal. Automatic waterers can be provided.

Provide ventilation for winter of 1/10 cfm/lb of calf.

Provide heat at a rate of 10 Btu/sq ft of glass, plus 5 Btu/sq ft of wall, plus 4 Btu/lb of calf.

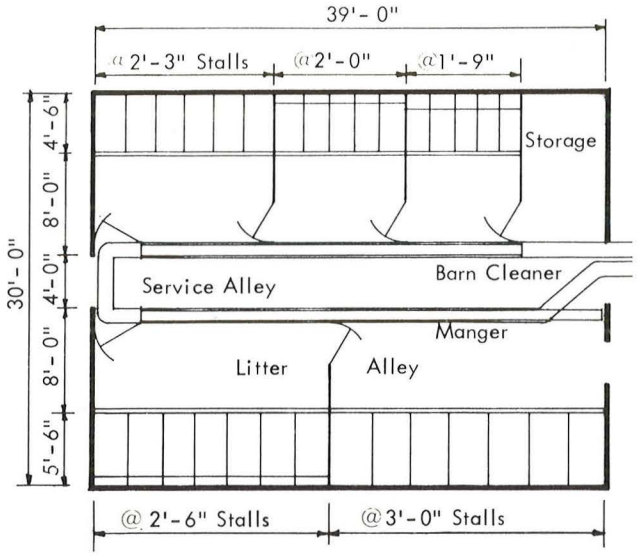

U. of Wisconsin

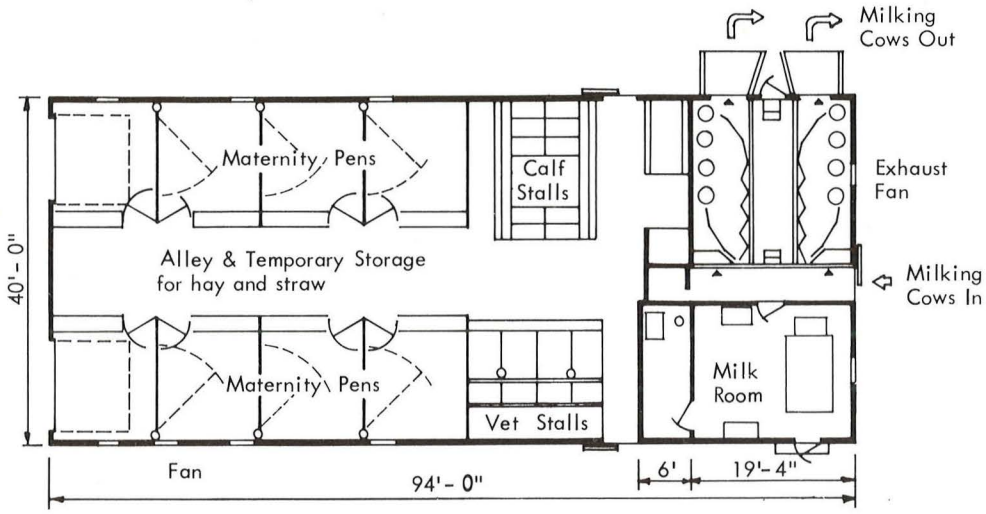

Michigan State U Plan # 723-C1-85

PEN ARRANGEMENT WITH MILKING PLANT

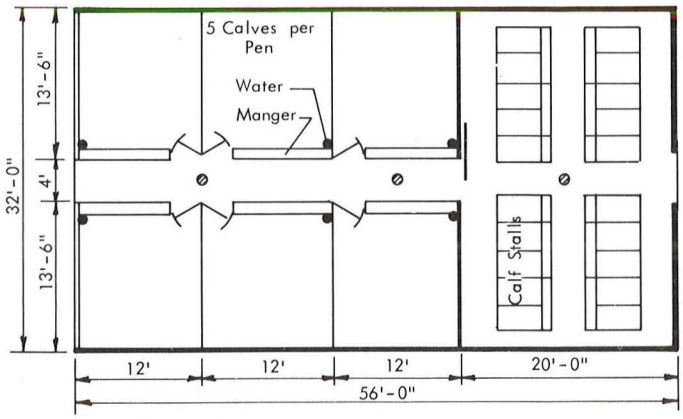

CALF BARN Midwest Plan #72341

Cold Barn

Pens should be used so calf can move about to get out of drafts. Solid partitions will reduce drafts and provide isolation for calves. Temporary movable partitions facilitate cleaning when calves are removed.

Heat lamps plus a portable cover over part of the pen may be necessary during cold weather. If water is to be provided in each pen, electric heaters will be necessary.

Provide hot and cold water, a drain, and storage space for utensils and supplies.

When calves are housed in open sheds, a manure pack can be started by older animals before cold weather.

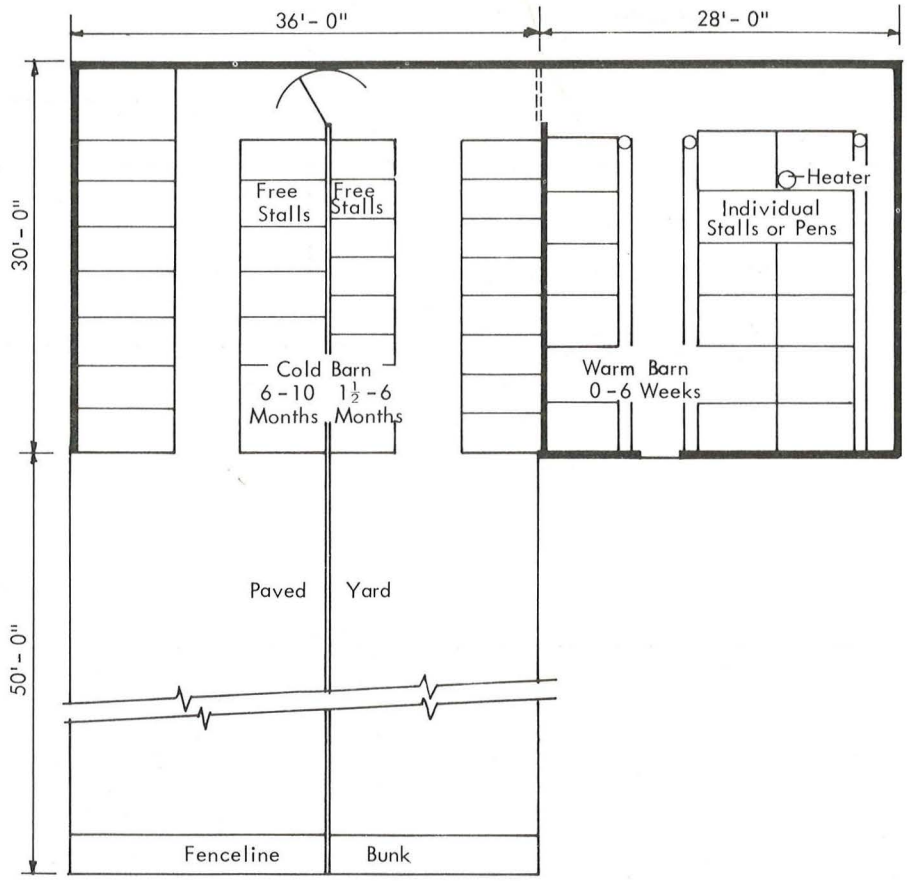

CALF AND YOUNGSTOCK HOUSING
Michigan State U. Plan #723-Cl-76

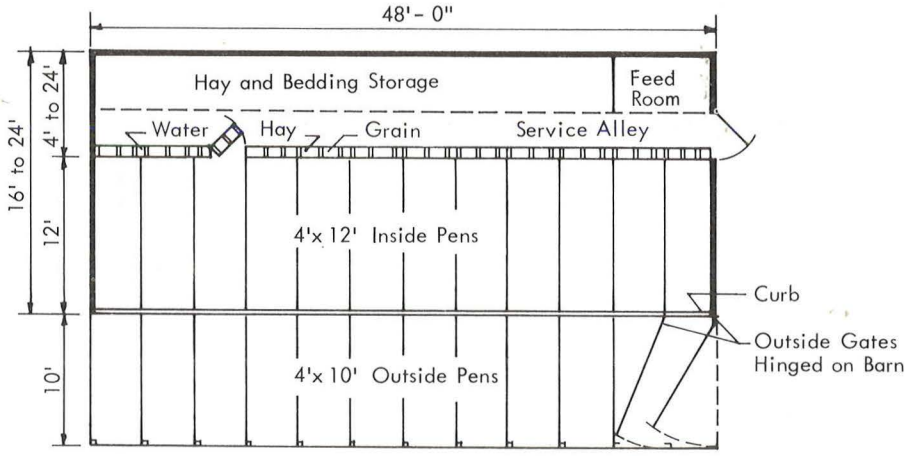

OPEN FRONT CALF BARN
U. of Illinois Plan No. 558

PENS

CALF, MATERNITY, BULL

Calves

Individual stalls or pens are preferred for calves up to 8 weeks of age or until calves are on solid feed to reduce danger of spread of disease or injury due to sucking. Tie stalls require less space, are easier to clean and require less bedding than pens.

Group calves when animals are too big for stalls or are on solid feed:

Maximum of 6 calves/pen.
Maximum age difference of 2 months.

Calves to 1½ months

Individual stalls 24" x 48". If slotted floors are desired, use no bedding and slot only the rear portion of the stalls. Provide shallow gutters to collect urine and washings.

Individual loose-run pens should be 20-25 sq ft. But, in group pens allow 15-20 sq ft/calf and one 18"-20" stanchion/calf.

Calves 1½ to 10 months—group pens

20 to 25 sq ft/calf.
20"-24" of stanchion space

Calves over 10 months—group pens

30-40 sq ft/calf
24"-30" stanchion space

All pens should have movable or swinging partitions so manure can be removed by machine.

Heifers, 10 months to freshening

Heifers are normally provided cold housing. Provide a bedded resting area:

Jerseys	30-45 sq ft/head
Guernseys and Ayrshires	35-50 sq ft/head
Holsteins and Brown Swiss	40-55 sq ft/head

Provide a feeding area separate from the bedded area. Feed outside or in open shed.

If cows are housed in stanchions, familiarize heifers with stanchions before they are heavy with calf.

Maternity and Bull Pen Sizes

Maternity Pens (one per 20 cows)	
Jerseys	100 sq ft
Guernseys and Ayrshires	110 sq ft
Holsteins and Brown Swiss	120 sq ft
Bull Pens	
Jerseys	120 sq ft
Guernseys and Ayrshires	140 sq ft
Holsteins and Brown Swiss	160 sq ft

Pen Construction

	Calf	Heifer	Maternity	Bull
Total height of partitions	4'	4½'	4½'	5½'
Width of gates	3'-3½'	3'-3½'	3½'-4'	3½'-4'

Alleys for animals should be at least 4' wide. Short feed alleys may be 2'-3' wide.

Watering

Automatic drinking cups are preferred—frostproof in a cold barn.

Water should be kept clean and fresh.

Top of drinking cups for calves should be 20" from floor; one cup/6 calves.

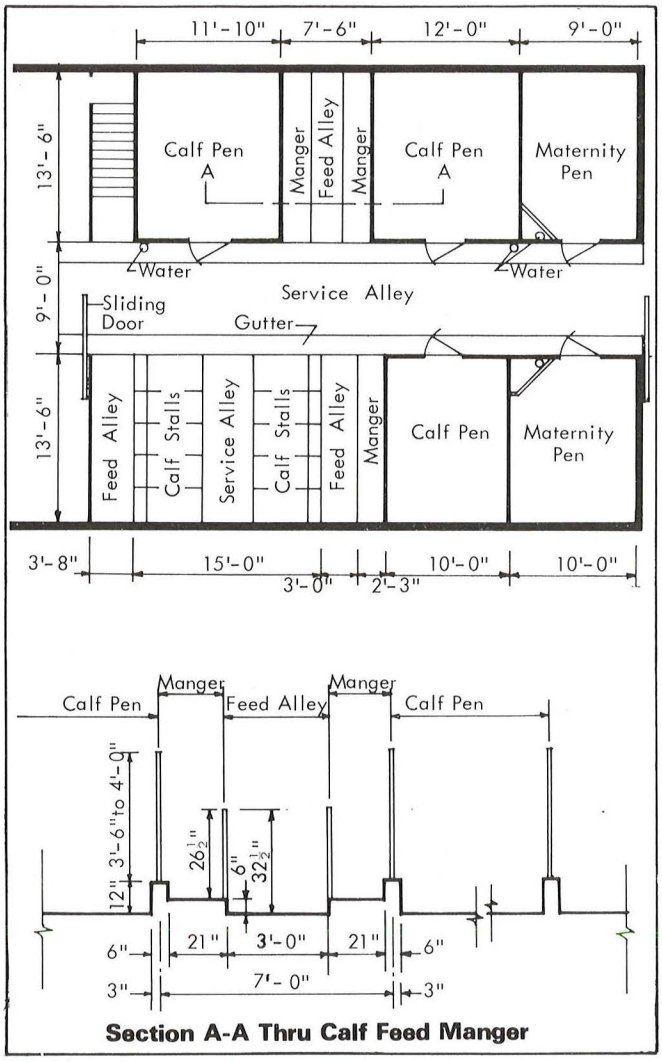

PEN LAYOUT—STANCHION BARN

VENTILATION

What it does—why it's needed:

- Removes moisture from inside buildings.
- Removes odors from animal wastes.
- Provides fresh air for animals.
- Removes excess heat in hot weather.

How it works:

Ventilation is a process of exchanging air. Air distributed through a building can pick up moisture, heat, dust and odors and, when exhausted, carry them outside the building. By exhausting humid, odorous and dusty air, and bringing in clean air from outdoors, it is possible to maintain conditions inside within an optimum humidity, odor and dust concentration range. To maintain temperature within the optimum range sometimes requires the addition or removal of heat.

Ventilation consists of:

- Fan or fans to move air.
- Inlets to distribute incoming air.
- Outlets to exhaust stale, humid air (usually the fans are the outlets).
- Controls to provide automatic operation.

Buildings Kept Warm in Winter

(calf and stanchion barns, some free-stall barns)

Before choosing a ventilation system:

- Repair and insulate doors and windows to make them as air tight and warm as possible.
- Insulate and install a vapor barrier.

INSULATION

The effectiveness of a material in resisting heat flow is measured by its Resistance, R. A good insulating material has a high R value. Table 6 gives the R values for a number of common materials; it is followed by a simple example.

The amount of insulation to use depends on a number of factors. See the Climate Zone Map on page 23 for winter temperature zones and recommended R values for farm buildings.

For a more complete discussion of insulation see AED-13 "Insulation and Heat Loss."

Table 6. Insulation Values for Common Materials. 1

Material	Insulation value[2] Per inch thickness	For thickness listed
1. Batt or blanket insulation		
Glass wool, mineral wool or fiber glass	3.70	
wood fiber	4.00	
2. Fill-type insulation		
Glass or mineral wool	3.51	
Vermiculite (expanded)	2.13 to 2.27	
Shavings or sawdust	2.22	
Paper or pulp products	3.57	
3. Rigid insulation		
Wood fiber sheathing	2.27 to 2.63	
Expanded polystyrene, extruded	3.85	
Expanded polystyrene, molded	3.57	
Urethane foam (aged)	5.88	
Glass fiber	4.01	
4. Ordinary building materials		
Concrete, poured	0.08	
Plywood, 3/8"	1.25	.47
1/2"	1.25	.63
Hardboard, 1/4"	.72	.18
Cement asbestos board, 1/8"		.03
Lumber (fir, pine) 25/32"	1.25	.98
Wood beveled siding 1/2" x 8"		.81
Asphalt shingles		.44
Wood shingles		.94
5. Window glass, includes surface conditions		
Single-glazed		.89
Single-glazed with storm windows		1.79
Double-pane insulating glass		1.5 to 1.75
6. Air space (3/4" or larger)		.90
7. Surface conditions		
Inside surface		.68
Outside surface (15 mph wind)		.17
8. Reflective-type insulation		
Aluminum foil	Ceiling	Wall
2 air spaces	5.00	5.92
3 air spaces	7.14	9.11

1From ASHRAE Handbook of Fundamentals, 1967.
2Mean temperature of 75°F.

Example

The resistance of a frame wall is calculated as follows from Table 6:

Number 7. inside surface	R = 0.68
4. ½" plywood	0.63
1. 2" wool (2 x 3.7)	7.40
6. air space	0.90
metal is zero	0
7. outside surface	0.17
	Total, R = 9.78

Climate Zone	Total Resistance (R)	
	Walls	Ceilings
Mild	9	12
Moderate	9-14	16
Cold	14	23

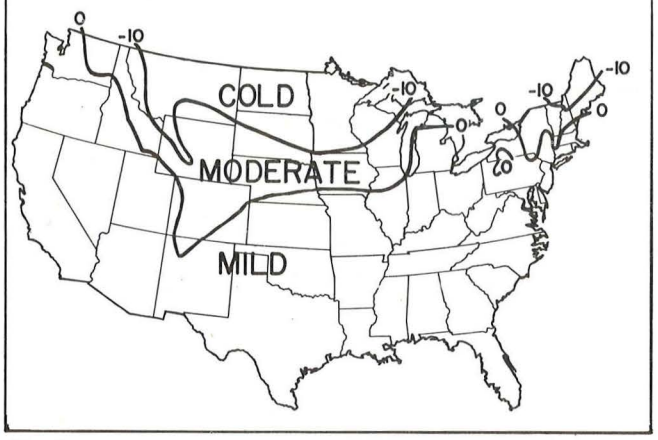

Climate zone map

Vapor Barriers

In livestock buildings, and other buildings where the relative humidity is high, it is extremely important to protect the insulation from moisture. Moisture, in the form of water vapor, tends to move from the warmer moist areas to the cooler outside. The moisture enters the wall, moves outward, and condenses when it reaches a cold enough area. Condensed water in the wall greatly reduces the value of the insulation and may damage the wall.

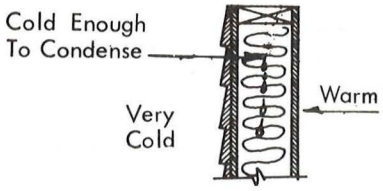

FANS

Fan Capacity

The following are the approximate requirements for fan selection:

Table 7. Fan capacity, cubic feet per minute (cfm), based on 100cfm/1000 lb body weight.

	Cow	Calf	Yearling
Jersey	100 cfm	35 cfm	50 cfm
Guernsey	110	35	50
Ayrshire	115	38	55
Brown Swiss	140	45	70
Holstein	150	50	75

During extremely cold weather, about one-fourth the above capacity should run continuously. At temperatures between the season's low and high, varying amounts of air are needed. To provide this range, select one fan with one-fourth the capacity to run continuously and control the other fan or fans with a thermostat.

Example:

60 Brown Swiss at 140 cfm= 8400 cfm

Select one fan at ¼ x 8400 or	2000 cfm
Select two fans at 3200 each or	6400
Total	8400 cfm

Fan Selection

Select a fan with a certified rating in cubic feet per minute at 1/8-inch static pressure. The free air rating sometimes given does not indicate the capacity of the fan when it is installed in a building and working against a wind.

Use a totally enclosed motor, because the fan is exposed to dust and moisture. A fan with sealed bearings eliminates providing proper lubrication. To protect the motor from burnout, select a fan with overload protection for the motor.

Use automatic shutters to prevent drafts when fans are shut off and a wire mesh guard to protect yourself and to keep birds out.

Thermostats

Thermostats have been satisfactory for on-off operation of fans. Most farm-type thermostats are able to keep the temperature within 2°F of the setting. With multiple fan installations, set the thermostats a few degrees apart. In cold climates a thermostat should shut off a continuous fan at 35°F to avoid freezing.

Locate the thermostat where it will sense the desired indoor conditions. Keep it away from heat sources, cold walls, and drafts.

What are optimum conditions for dairy cows? Research at the University of Missouri Psychroenergetic Laboratory has indicated no change in production for Holsteins at 10°-70°F with a decline in production above 75°F. Jersey cows showed no change between 30°F and 80°F with declines above and below these temperatures.

Most controlled environment dairy buildings are kept at 40°-60°F from November through April. Relative humidities of from 60%-80% are common in ventilated dairy buildings.

Fan Location

Locate fans in tight walls. Keep them away from loose-fitting doors, gutter cleaner openings, hay chutes, and silo doors. Locate fans on south or east side if possible, and away from prevailing winds. A good location for two fans is side by side at the center of the building. Avoid a barn fan location that directs the exhaust air toward a milkhouse inlet.

The distribution and flow of air within a building is almost completely determined by how and where the air comes in and very little by the fan location.

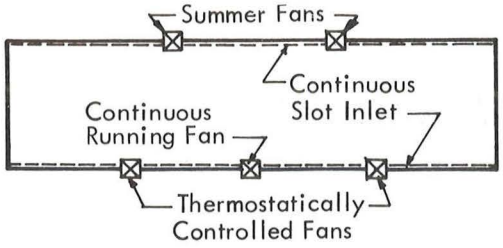

Inlets

Inlets need to be properly designed for satisfactory ventilation. If there are too many or too large openings, the building may be cold, and wind could affect ventilation more than the fans. Parts of the building may be overventilated while others may not receive enough fresh air. If the inlets are too small, fans operate at reduced capacity, and ventilation may not be adequate.

A continuous slot in the ceiling at the outer wall provides a curtain of fresh air completely around the building. A continuous fan maintains this air flow and helps reduce condensation on doors and windows. If all fans stop, humid air enters the loft unless an anti-backdraft plastic curtain is provided.

Air that enters a building does not travel in a straight line toward the fan. With proper design, the air entering a slot inlet will distribute itself uniformly throughout the building and mix with the inside air. Local convection currents created by heat from the animals will aid the mixing process.

Allow about ¼ sq in. of inlet area for each cfm of fan capacity. For example, with total fan capacity of 6,000 cfm, 1,500 sq in. of inlet area would keep the inlet air speed in the optimum range.

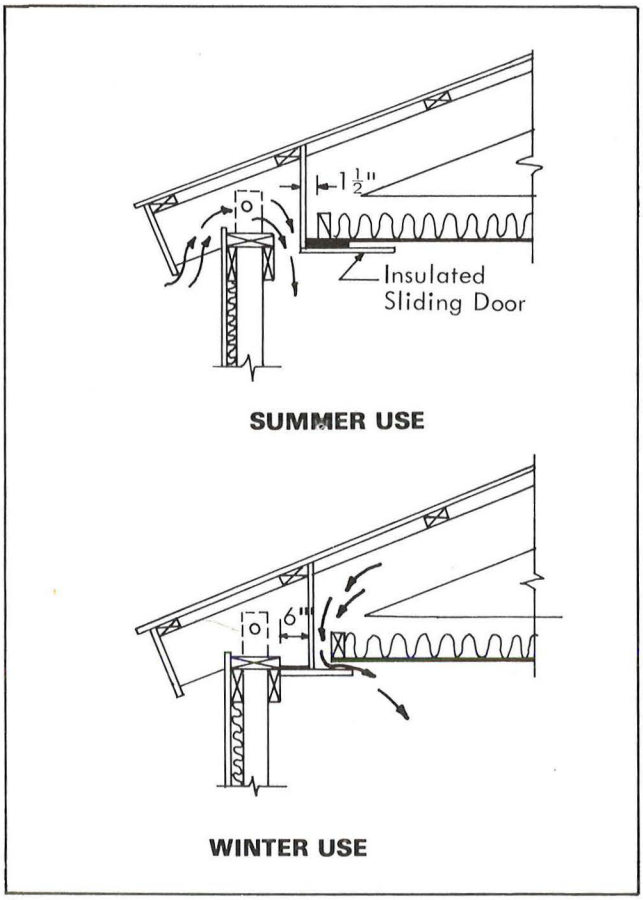

A slot inlet for fresh air

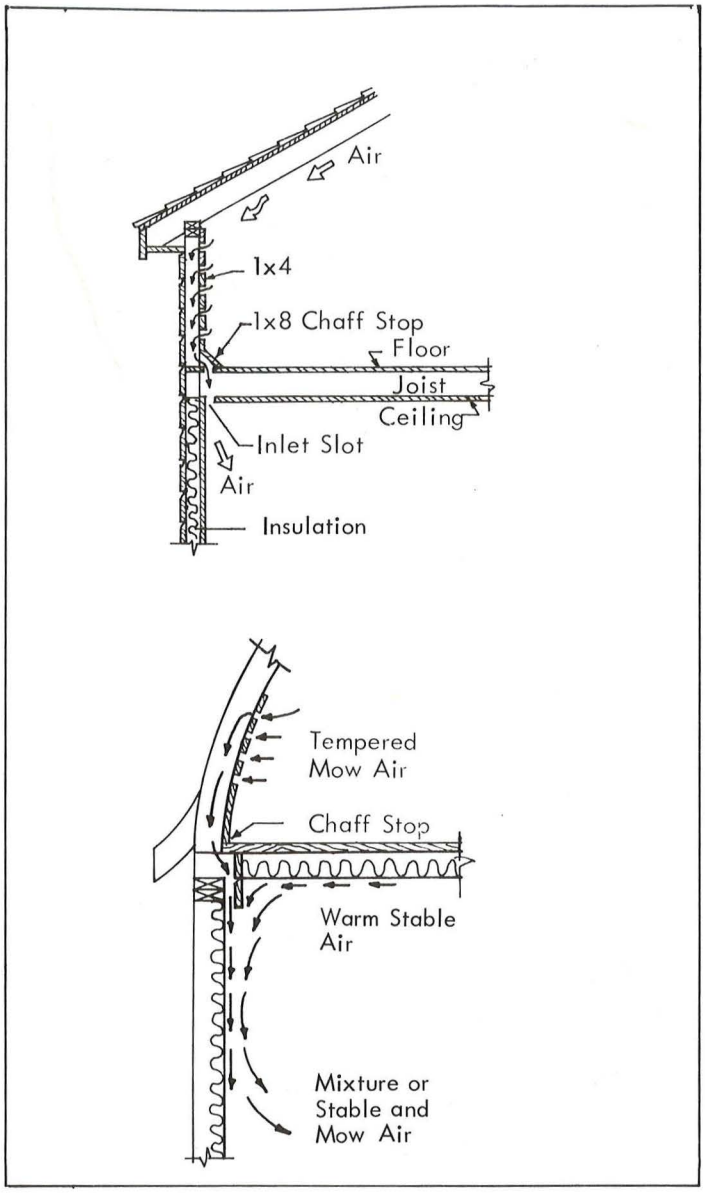

Inlets for hay-mow barn

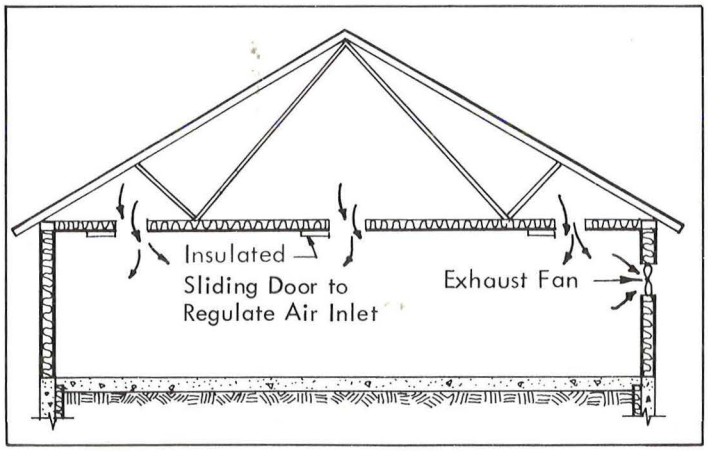

Fresh air inlets located in ceiling

Supplemental Heat for Calf Barns

To maintain the desirable inside temperature of about 50°F in a calf barn, more heat is needed than the animals can provide. (Do not simply shut down ventilation fans, as poor humidity conditions and condensation will result.)

To estimate the amount of supplemental heat needed in a well insulated building:

Multiply:

weight of calves, lb	x 4=	_____
wall area, sq ft	x 5=	_____
glass area, sq ft	x 10=	_____
Total (add)		_____

The total is the number of Btu's (British thermal units) of heat to be provided by electric or vented gas or oil heaters. Divide Btu's needed by 3000 to obtain kilowatt rating of electric heater.

Set the heater thermostat to shut the heater off about 5°F below the temperature the main winter fans (usually 55°F) turn on.

Note: Calf pen areas in stanchion barns can be difficult to keep ventilated and dry. In cold climates, locate pen area to the east or south end of the barn.

Summer Ventilation

Close slot inlets from attic or mow.

Provide ventilation panels along all walls. Open doors and ventilation panels for maximum natural ventilation.

Provide circulation fans during hot weather when there is little or no wind. Circulation fans should operate at 1750 rpm, can be unrated units, and should have sealed motors. Provide one 10"-12" swivel-mounted fan for each 50'-60' of wall.

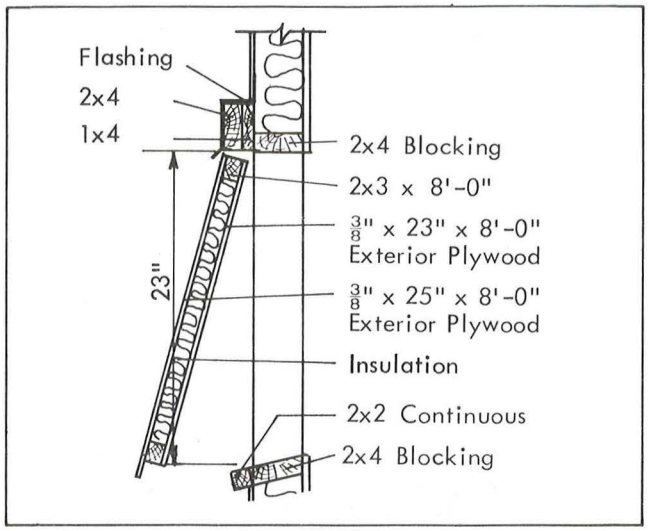

Ventilation panel

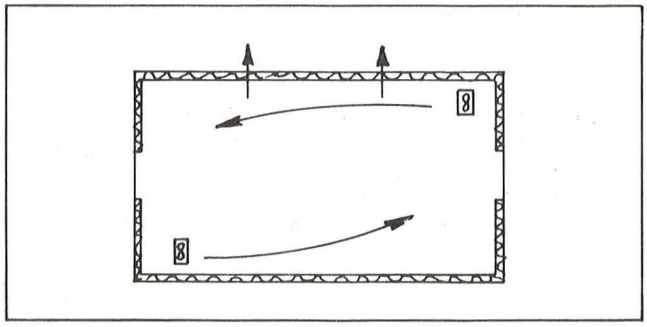

Circulation fans

Buildings Kept Cold in Winter

The building is designed to use natural air movement to maintain inside temperatures within a few degrees of outside conditions.

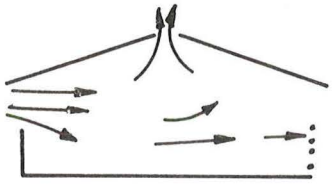

SUMMER

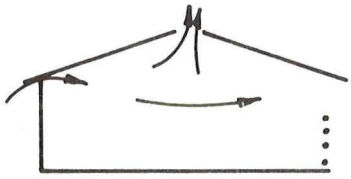

WINTER

Openings

Leave front wall (S or E) open. Provide small openings in back wall (N or W) for winter inlets: 4"-6" continuous slot under eave, or equivalent.

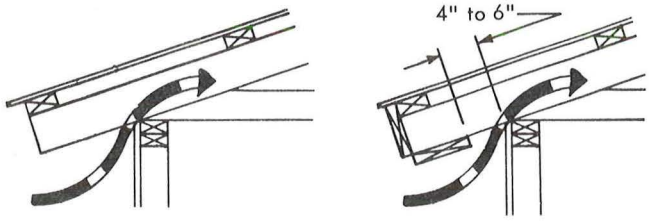

Mild Climate **Cold Climate**

Install large openings (doors or ventilation panels) in back wall for summer inlets. About ½ of the wall area should be open; breezes should circulate at animal level.

In cold climates, a closeable back-wall vent can be built into the framing of a pole building.

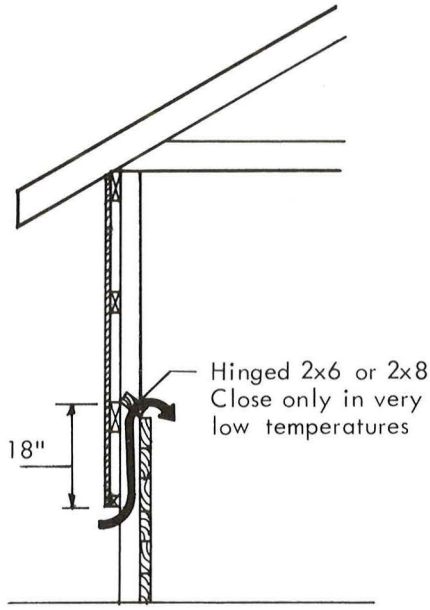

Provide a continuous slot at the ridge. Slot width should be about 1" for each 10' of building width, with a 6" slot recommended in the cold zone to avoid frost accumulation.

Flashing over trusses will reduce moisture on truss joints.

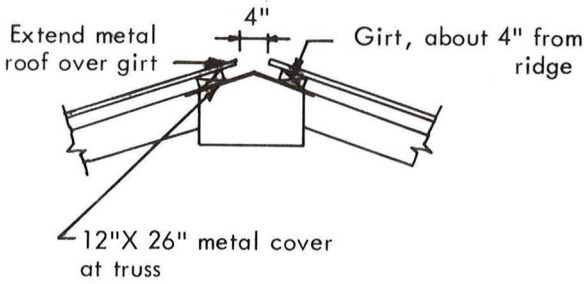

Snow and Wind Control

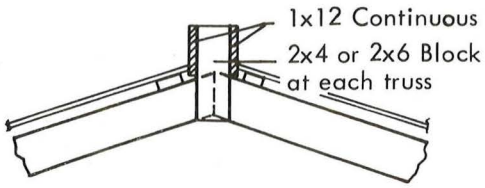

A method suggested to reduce snow percolation through a continuous ridge slot.

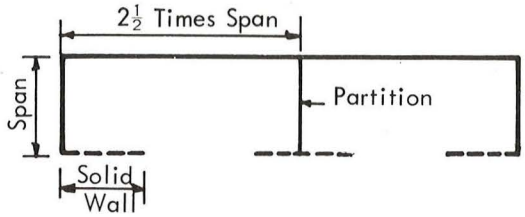

Install solid cross partitions to roof in long buildings if indoor drafts are a problem.

Cold, Windy Region

Reduce front wall opening:

Side part way down the wall to reduce snow blow-in.

Close front wall for 1/6 building length at each end and adjacent to solid partitions in long buildings.

Moderate Region

Limit roof overhang, leaving front open as high as possible, because sunshine along the open front is of more value than reduced snow blow-in.

Mild Region

Leave front wall completely open.

Solid cross-partitions may not be needed.

Roof overhang to cover feed bunk may be provided.

MANURE HANDLING

Introduction

Manure management is an important part of the complete dairy production system. Manure collection, transport, storage, treatment and disposal facilities must be compatible with milk production and housing programs.

Modern standards of sanitation and pollution control are extremely important. A major objective in addition to the production of clean milk is the protection of water sources from manure and the seepage from manure. It is also important that the by-products of the dairy operation be handled so as to minimize odors, flies and other nuisances, and guarantee the safety of people and animals.

The proposed waste disposal system should be approved by appropriate public health and milk receiving station officials BEFORE construction is started.

Manure can be handled as:

- Solid manure—feces plus bedding, 70%-80% moisture.
- Liquid manure—feces only, 85%-95% moisture.

Manure with bedding can be high in moisture yet be handled as dry manure. A general range of moisture content for manure without bedding is:
75-82% moisture, stiff, some drying taken place.
80-85% " , fluid or semi-liquid, quite thick slurry
83-90% " , liquid, fairly thin liquid at 90%
93-97% " , irrigation consistency

Tables 7, 8, and 9 give typical data for dairy wastes.

Comparison of Methods

Daily Hauling

Labor is distributed throughout the year; manure hauling is daily and in all kinds of weather. There is no manure accumuiation. Odor problem is minimized. Investment is less than with stacking or liquid. Some fields may be unavailable because of crop cover, or soil or snow conditions. Runoff may be excessive on some fields, particularly when frozen or snow covered. Use of tractor and equipment in cold weather increases wear. Save the urine portion by using liquid-tight spreaders.

Stacking

Investment is less than with liquid for long term storage. May replace daily spreading when fields are unavailable. A tractor with manure loader is needed in addition to spreading equipment. Stack should be convenient for loading and hauling; it may be unsightly. Keep cattle away from stack. Summer stacking may not be permitted. Use plenty of bedding to minimize runoff from the stack or use a tank for urine. Minimize nitrogen losses by discing or plowing shortly after spreading. Labor requirements may interfere with spring planting.

Liquid

Year-round storage is possible with adequate storage tank capacity. Permits saving maximum amount of manure if worked into the soil shortly after spreading. Milkhouse and parlor wastes can go into manure storage tank, but human waste cannot. Investment is high. Equipment is required for agitating, pumping, and hauling. Odors can be a problem, especially when agitating and spreading. Labor requirements may interfere with spring planting.

Table 7. Approximate composition and daily production of fresh manure.

Item			lb/day/1000 lb of animal
Urine and feces, total			84 lb
Mineral matter		2.1	
Nitrogen	.5		
Phosphorus	.15		
Potassium	.45		
Other	1.0		
Organic matter		11.4	
Moisture content (84%)		70.5	

Average density 59 lb/cu ft

Table 8. Average daily and monthly manure production (feces and urine only—no bedding).

Cattle weight, lb	Percent Feces-Urine	Pounds Day	Pounds 30 Days	Gallons Day	Gallons 30 Days	Cubic Feet Day	Cubic Feet 30 Days
1400	70-30	118	3540	15.4	464	2	60
1000	70-30	84	2520	11	330	1.4	42
750	70-30	63	1890	8.2	246	1.1	33

Table 9. Increasing manure moisture content with water.

1 cu ft (7.5 gal) Moisture	Changed to Moisture	Cu Ft	Gal	Gallons Added
84%	87%	1.23	9.2	1.7
	90	1.60	12.0	4.5
	95	3.10	23.3	15.8
80	85%	1.33	10.0	2.5
	90	2.0	15.0	7.5
	95	4.0	30.0	22.5
75	80%	1.25	9.3	1.8
	85	1.66	12.4	4.9
	90	2.50	18.7	11.2
	95	5.0	37.5	30.0
70	75%	1.2	9.0	1.5
	80	1.5	11.3	3.8
	85	2.04	15.2	7.7
	90	3.0	22.5	15.0
	95	6.0	45.0	37.5

Table 10. Summary comparison of investment and annual cost of manure handling alternatives. (50-cow herd)

Alternative	Investment	Annual Cost
Daily hauling (stanchion)	$ 3,200	$2,065
Stacking (stanchion)	5,400	1,517
Liquid manure (stanchion)	14,500	2,327
Stacking (free stall)	4,400	1,457
Liquid manure (free stall)	13,500	2,447
Liquid manure (free stall, slotted floor)	15,500	2,427

For discussion of source of costs and for more detail, see "Considerations in Selecting Dairy Manure Disposal Systems", Berge et al, U. of Wisconsin, 1969.

Runoff Control

Rainfall which lands on or flows across manure-covered areas or stockpiles produces a runoff capable of causing severe pollution to streams, lakes or ponds. This runoff must be intercepted and kept from reaching useable or public waters.

Local regulations may govern runoff control systems; if no regulations exist, the following information may be used.

Minimize Runoff

Divert all uncontaminated drainage from outside the lots away from the livestock area. Collect roof drainage in gutters, and divert through underground tile.

Collect Runoff

A two-pond system works best. The first unit is a settling basin to remove most of the solids—the solids take longer to decompose and are the greatest pollution hazard. The second unit is a detention pond to retain overflow from the settling basin. It acts partially as a lagoon, and partially as a holding basin from which heavy rains are gradually released into a water course or field to minimize pollution, or are spread through irrigation equipment.

Pond Management

Maintain dikes and dams—mow grass, control rodents, keep well fenced.

Empty settling tank as necessary. The settled material may be handled as liquid or semi-solid depending on moisture content. A drag-line, tractor manure scoop, irrigation pump, or manure pump may be used.

The detention pond may be emptied by percolation, distribution with irrigation equipment, or a deponding hose. The deponding hose should be 1" to 1½" in diameter, suspended from a float 1' below the pond surface, and discharge to (in order of preference): flat fields for gradual soil absorption, gully or other intermittent water course, minor creek. Leave about 2' of water in the detention pond or water weeds may become a problem.

Sizing the Ponds

One acre of drainage area will produce 3600 cubic feet (27,000 gal) for each inch of rain.

The first pond (settling) should have a capacity of 1" of runoff.

The second pond (detention) should have a capacity of another 1" if pond will be emptied within one week with irrigation, or other, equipment. An area at least equal to the feedlot area will be required for irrigation disposal. If the second pond is to be emptied by any other method it should have a capacity of 2" of runoff.

Detention Pond

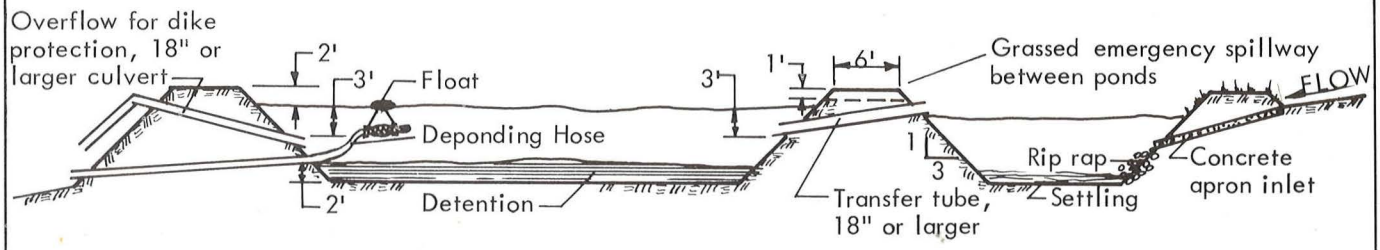

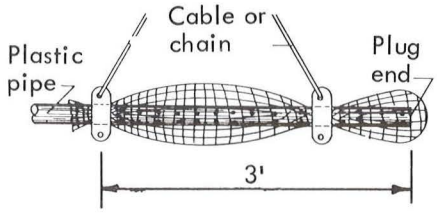

Drill 50 ¼" holes in 3' length; cover with ¼" wire mesh; clamp tightly

PERFORATED PIPE

Pond Volume = (area of bottom) times (depth) plus 1½ times (depth) times (depth) times (length of all dikes)

EXAMPLE: Bottom Size = 60' x 60'; 10' water depth

Capacity = (60 x 60) x (10) + 1½ x (10) x (10) x (60 + 60 + 60 + 60)
= 36000 + 36000 = 72000 cu. ft.

Solid Manure Handling

Solid manure results from catching and holding excrement in bedding, or by allowing the liquids to run off, leaving the solids to be handled separately.

Collection

Wastes are usually loaded directly into a manure spreader with barn cleaner or tractor and scraper. In free stall housing, a reinforced wall to push against is convenient. Or, provide a scrape-off ramp into spreader at end of service alley. If manure can't be hauled, store it temporarily in an approved area.

Recommendations

Haul manure directly to fields when possible.

When a stockpile is necessary, locate it for convenient loading in a spreader, out of natural drainageways, and away from any water source. Divert surface water away from the storage area.

Check local regulations for recommended runoff control systems. If no regulation exists, collect manure runoff from stockpiles or lots in a detention pond (page 28) if runoff may cause pollution.

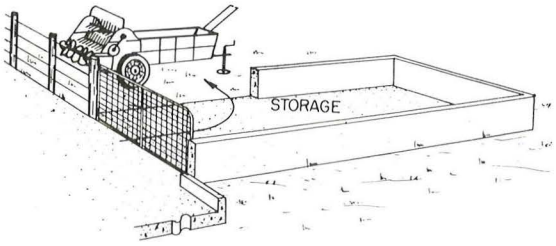

Dry storage is provided for lot scrapings if manure cannot be taken to the fields daily. Provide a fenced storage area of about 10 sq ft per cow, which can be unloaded from outside the yard. Clean at least weekly during fly breeding season (spring temperatures above 65° through hard frost in the fall). Drain the area away from the yard.

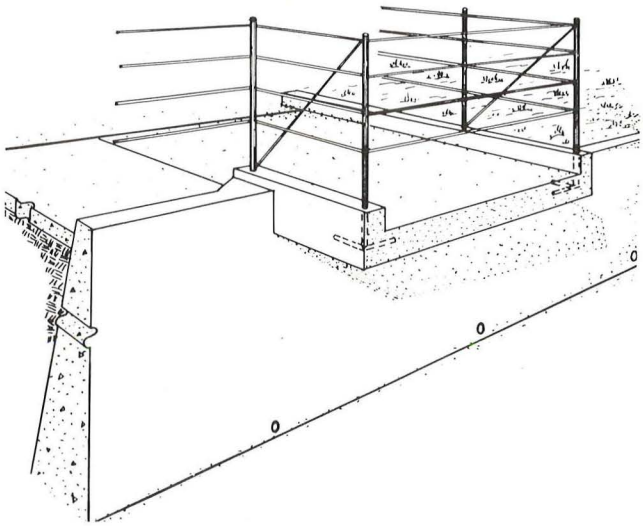

Loading ramp facilitates loading solids into a spreader with a scraper blade. Note that drainage is away from the ramp. In severe climates, manure may be stored below the ramp and loaded into a spreader with a tractor scoop.

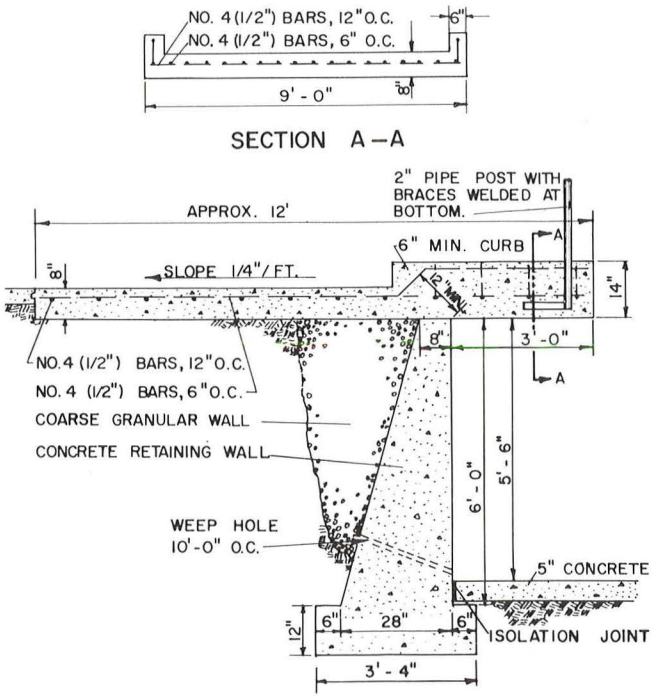

Liquid Manure Handling

Many milk producers are handling manure as a liquid, because in covered housing manure without bedding is very liquid so a liquid manure system is convenient. Slotted alleys don't need to be scraped.

Objectionable odors, unsightliness, and fly problems can be controlled when excrement is stored as liquid manure. The odors that occur when manure is spread on a field are occasional instead of daily.

Liquid manure handling requires the following:

- Equipment or facilities to get the manure into storage: scraper, slotted floors, drains, etc.
- Adequate storage capacity.
- A watertight storage unit to which water can be added.
- Equipment that will stir and remove the liquid manure: pump, agitator, etc.
- Facilities to dispose of the manure: tank truck or wagon, irrigation fields, available land, a lagoon, etc.

Collection

Locate the liquid manure storage tank near the holding area where the manure is quite sloppy. A tractor scraper may be used to push the manure into an opening in the tank top. The opening should be fitted with a pipe or bar grate, and with a steel plate cover to prevent cows from slipping through the opening, control flies and odor, and protect against children or animals falling in.

When liquid manure is used with an outside lot the manure tends to dry and water must be added to make the manure pumpable. Usually about one gallon of water per gallon of manure is added. Water can be supplied by connecting the roof downspouts to the tank. A valve should be put in the downspout to divert excess water during heavy rains. Do not put more water in the tank than is necessary.

Locate outside tanks so surface water cannot drain in. Where the ground water level is above the tank bottom, special tank design is necessary.

Storage of Liquid Manure

Liquid manure is stored in an underfloor or outdoor tank, a pit under slotted floors, or narrow gutters.

Locate the storage unit at least 100 feet from any water supply. Do not construct the storage unit over creviced bedrock or other subsoil conditions where uneven settling could cause the unit to break and leak.

Storage capacity depends on the number and ages of cattle, the method of cleaning, and the desired storage period. Large storage units have maximum labor advantage. Three to six months storage capacity is desirable if manure is to be field spread, to avoid spreading on frozen and snow-covered ground or on crops.

Storage Capacity = number of animals x daily manure production x desired storage x (days) + extra water

Cleaning dairy facilities with high-pressure water may double the volume of wastes. From 1/5 to 3/5 of the storage volume may be needed for extra water if the manure is to be pumped.

Storage units must be watertight. Cast-in-place concrete is recommended. Insulate storage tanks against freezing in cold climates. When construction is completed, clean out chips, nails, and other construction residues.

Filling Liquid Manure Storage

Add water to the storage unit before filling it with manure. Add 3"-4" to pits under slotted floors; add 6"-12" if the unit will be loaded intermittently with scraped wastes. Never add frozen manure to a storage tank.

Keep tanks closed when not in use, and maintain a program of fly control, including bait and spray insecticide and repellents. Fly reproduction can be discouraged by keeping all solids submerged.

Table 11. Space requirements for animals on slats.

Size of Animal	Sq Ft
Calves under six months	10 - 15
Cattle 6 months–1 year	15 - 25
Cattle 1 year–2 years	25 - 35
Cows	35 - 45

Emptying the Storage

It is usually necessary to agitate stored manure just before emptying, as some solid excrement settles. Effective agitation is possible with recirculating pumps operating at about 2000 gallons per minute (gpm) in storages with ports about 30' apart. Paddle agitators are usually effective only in smaller tanks. Augers are sometimes used, but are usually not too effective.

Agitation is usually not needed for narrow gutter storage space. Open the outlet or plug and run wastes to a separate storage tank or lagoon about twice a week.

Gases escaping from agitated manure may have ill-effects on animals and humans. Operate all ventilation fans and open doors and windows when agitating and unloading manure storage.

Remove the agitated manure with pump, auger, or gravity flow to tank wagon, irrigation lines, or a lagoon.

Pumps

Several types and sizes of pumps are available to remove the liquid manure. Some common types are:

Pump on a wagon—creates a vacuum within the wagon which sucks the liquid from the storage, and creates pressure within the wagon for unloading. Small storages can sometimes be agitated satisfactorily by partially filling the wagon, and then reversing the pump to empty the wagon back into the storage. PTO units pump about 300 gpm.

Centrifugal pump without choppers—submerged in the manure; can pump into a tank wagon. Pump sizes range from 1½ to 5 horsepower and deliver up to 2000 gpm. Solids and bedding may clog centrifugal pumps.

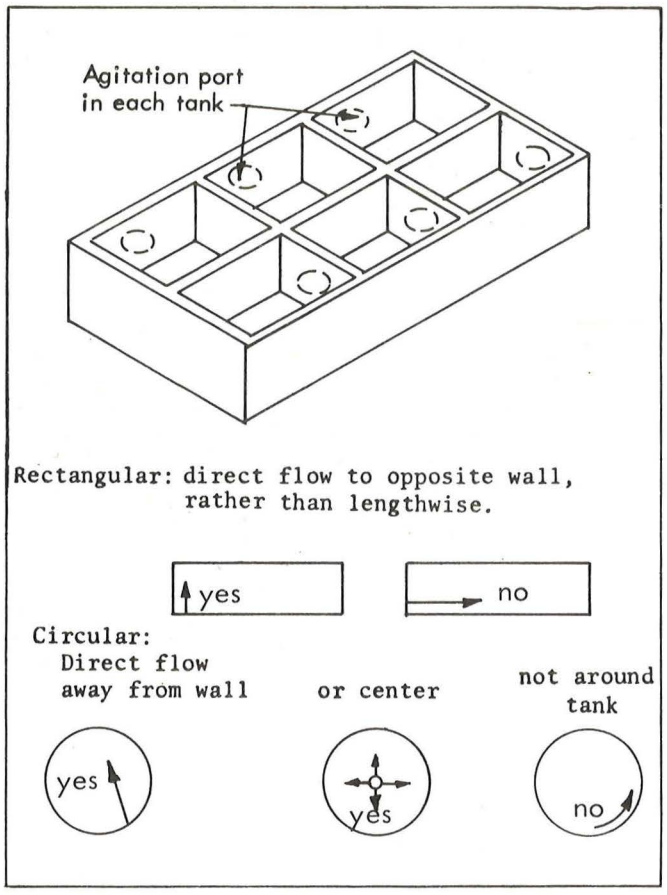

Locating agitation pump in undivided storage.

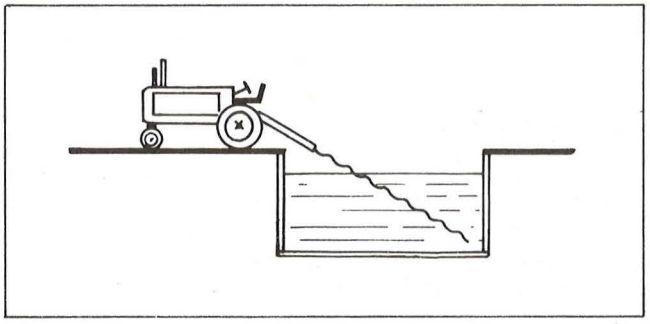

12"-14" auger agitator.

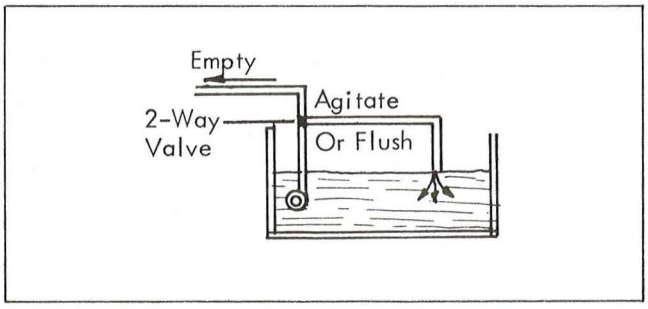

Centrifugal pump with by-pass to agitate storage or flush long gutters.

Diaphragm pumps—3", 2 horsepower pump will lift 50 to 70 gpm, and can handle some solids.

Chopper-impeller pumps—designed to pump manure that contains chopped hay, feathers, etc. Typical sizes range from 5 to 30 horsepower. They deliver from 300 to 2500 gpm.

Augers

Augers are not very efficient for moving liquid manure. Augers are commonly powered with PTO driven hydraulic motors. One to 5 horsepower will lift 40 to 180 gpm through 4"-6" augers.

Gases From Stored Liquid Manure

Gases from liquid wastes stored inside a building create a hazard and undesirable odors. Most (95% or more) of the gases are methane, ammonia, hydrogen sulfide, and carbon dioxide. The remaining fraction is primarily gases that are heavier than air and have undesirable odors.

Heavier-than-air gases tend to accumulate in a layer just above the slurry. In a slotted floor house with the pit nearly full, animals lying on the slats may inhale air containing an excessive amount of gases.

Methane (CH_4). Colorless and odorless; ½ the weight of air; forms explosive mixtures with air, even when present only to the extent of 5% of the volume; acts as an asphyxiant by displacing air.

Carbon Dioxide (CO_2). Colorless and nearly odorless; about 1.3 times denser than air; an asphyxiant.

Ammonia (NH_3). Colorless with a pungent odor; about 2.3 times tne weight of air; low concentrations irritate eyes and mucous membranes; 5000 parts per million (ppm) is a dangerous level.

Hydrogen Sulfide (H_2S). Colorless with a rotten egg odor; slightly heavier than air; very poisonous; an irritant and asphyxiant. Concentrations of 20 to 150 ppm irritate eyes; 500 ppm for 30 minutes cause severe headaches, dizziness, excitement and staggering gait; exposure of 800 to 1000 ppm may be fatal in 30 minutes. This gas is released as agitation begins.

The primary hazard to animal health generally occurs with inadequate ventilation. Animals asphyxiate because methane and carbon dioxide displace oxygen. Ammonia can irritate respiratory tracts and make them more susceptible to disease.

Building Design Recommendations

Locate electrical entrances outside the building, and as much wiring and fixtures as possible above the ceiling or behind a vapor barrier to minimize corrosion.

Provide positive ventilation over indoor storage pits, especially during agitation or pumping of the storage pits.

Exhaust some ventilation air from above the stored liquids; even a low-volume continuous fan pulling air from above one corner of a tank will aid in reducing the accumulation of heavier-than-air gases at animal level.

Provide an alarm system (loud bell or readily noticed light) to warn of power failures in totally enclosed buildings. Tightly closed buildings can have a rapid build-up of gases at animal level which eliminate sufficient oxygen.

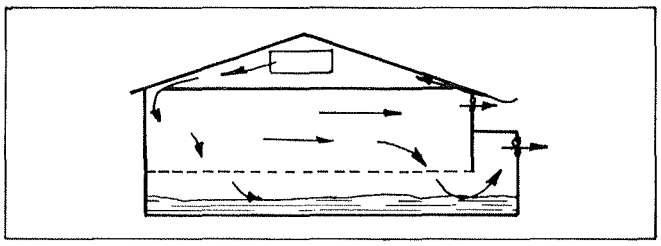

Location of fans.

Disposal

Liquid manure can be disposed of through irrigation lines, with spreading equipment, or by decomposition in a lagoon.

Irrigation

The liquid manure should be about 95% water and thoroughly agitated for irrigation.

Field-spreading

Keep extra water to a minimum if the manure will be spread with a tank wagon. Wagon tanks are available in sizes of 750 to 2500 gallons. Wide floatation tires minimize damage to fields. An agitator in the tank improves uniform delivery and reduces plugging.

Gravity or pumped spreading is acceptable, as even distribution of the manure is usually not required.

Lagoons

Some livestock producers are draining or pumping any extra storage water and some of the liquid excrements to a lagoon. The solids and semi-solids left in storage are then spread on a field when convenient. A lagoon does not have to be as large when only liquid effluent is added to it. Some of the nutritive value for the field-spread manure will be lost.

Livestock manure is sometimes placed in a large lagoon that will decompose all the wastes. All nutritive value is lost. Storage tanks are usually not needed or desirable with this disposal method. See AED-1, "Anaerobic Manure Lagoons," at your County Extension Office.

WASTE FROM MILKING PLANT

Consult local health authorities before installing any system.

A Typical System

Toilet room wastes (including sink, shower, and floor drains) are piped to the dwelling septic tank or a separate septic tank. Milking room and milkroom wastes pass through a settling tank. The effluents from the septic and settling tanks are discharged into common or separate below-ground disposal fields.

Lagoon

A well-managed lagoon (50 to 60 sq ft per cow milked) will effectively decompose all wastes from the toilet room, milking room, and milkroom in moderate climates. No settling or septic tanks are needed.

Settling Tank

The combined waste from milking room and milkroom contains fibrous material which is trapped in a settling tank. It will not decompose in the tank, so provide for pumping or draining out the settled material often enough to keep the tank in effective operation.

Capacity below the overflow level: at least 20 gallons per cow to be milked.

Absorption Field

The following are approximate lengths of lines in absorption fields for well-drained soils:

- From Septic Tank
  Single Line Trench—150' min
  Double Line Trench—100' min
- From Settling Tank
  Single Line Trench—60'/milking stall or 8'/cow.
  Double Line Trench—30'/milking stall or 4'/cow.
  75' Maximum Length, each trench.

Pipe

Use 4" cast iron, plastic, glazed tile with cemented joints, asphalt impregnated fiber, or cement-asbestos pipe. Lines from septic or settling tanks may be clay field tile if they do not pass within 50' of trees or 100' of a well. Odors can be avoided by using traps and venting sewer lines by standard plumbing methods.

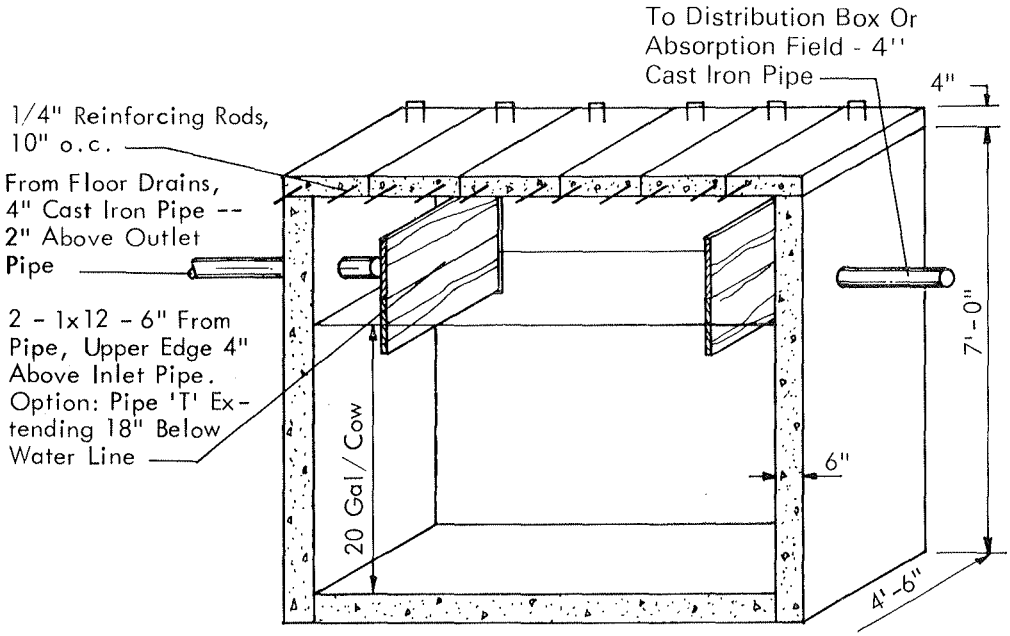

Settling Tank

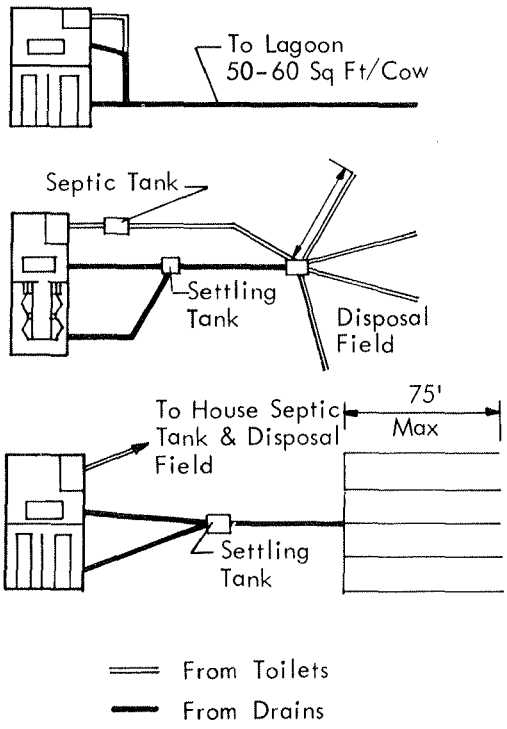

Disposal Layouts

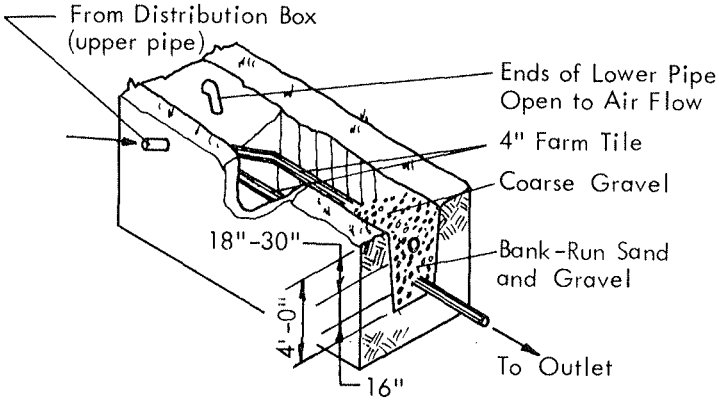

Double Line Trench

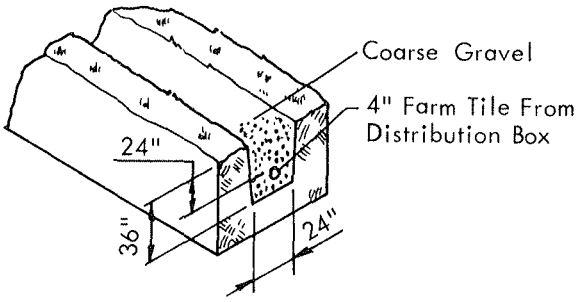

Single Line Trench

Slotted Floor Construction

Concrete slats last the longest; then wood, then corrosion-resistant steel. Concrete slats are heaviest, requiring strongest supports. Wood tends to wear, leaving irregular slat spacing.

Concrete slats may be homemade or purchased precast. When using ready-mix concrete, specify the following to the contractor: a 7½ bag mix with a slump of 2"-3", maximum aggregate size of ½", a 28-day strength of at least 3500 lbs/sq in., and 8% air entrainment.

Concrete slats are usually supported on concrete piers or masonry walls. The top course of concrete masonry walls should be solid block or have cores filled with mortar.

Hardwood slats of oak, elm, hickory, or maple may last two to five years. Softwoods will splinter and wear away. Use cleaned and dried preservative-treated lumber as the preservative may cause skin irritations. Provide spacers to assure uniform slot widths; 3/4" dowels through slats 3'-4' apart.

Openings must be large enough to allow solid manure to be worked through rapidly. Some scraping or washing may be necessary if the entire floor is not slotted.

Leave a 2"-3" space between slats and a wall or partition. Do not use bedding with slotted floors.

Reinforced Concrete Beams For Concrete Slotted Floors

Slat Length Between Beams	Beam Sizes for Spans Of: 8'		10'
6'	8"x12" 2-#6	(w x d) (Bars)	8"x14" 3-#6
8'	10"x12" 2-#6		10"x14" 3-#6

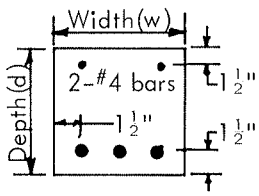

Beam Dimensions

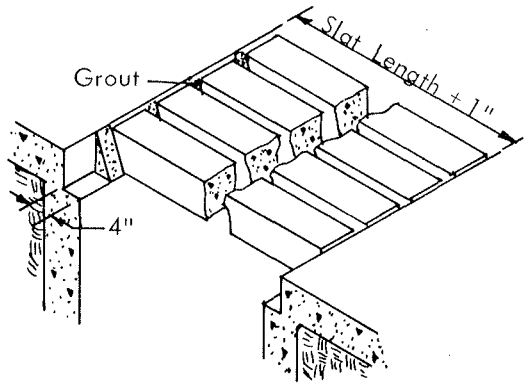

Sizes of Concrete Slats*

*Approximately 150 lb/sq ft design live load.

Space slats 1¼" apart for calves, 1½" to 1¾" apart for cows.

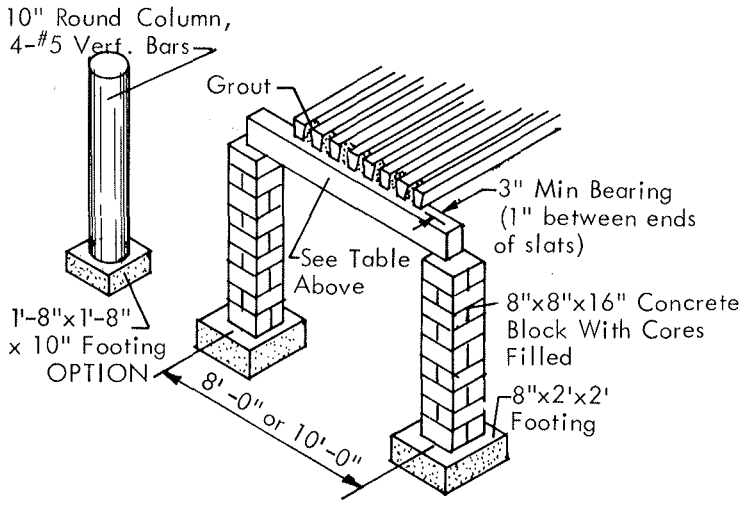

Length	A	Bar
Up to 6'	4½"	#3
Up to 10'	6"	#4

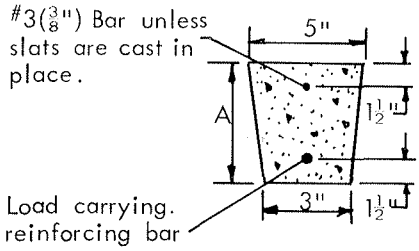

BUNK PLANNING

Feeding

Feeding space per animal is determined by the size of the animal, and the number of animals which will eat or drink at one time.

If all animals must eat at the same time, allow 30" bunk space per cow, 24" per yearling.

If feed is always available (horizontal silo or self-feeding hay barn) allow 4"-6" per head. If fresh feed is supplied at least daily, more animals will want to eat at one time. Allow 15"-18" per cow, 12" per yearling.

Watering

Drylot—40 head per waterer space. Locate waterers where they are readily accessible. Pave at least a 10' apron around waterers.

Pasture—if cows have ready access to water all day, use drylot recommendations. If cows can water only 2 or 3 times a day, provide 1 watering space per two cows.

Stall Barn—water should always be available, even if cows are housed only at night.

Orientation

Orient bunks N-S to NE-SW with silos on the north end. Provide drainage diversion on east or west facing slopes. Bunks should not block cross drainage on lots.

Orient bunks up and down the slope. Provide apron.

Pavement

Pave around all feeding and watering facilities. Provide for power cleaning. Provide walkways from feeding areas to other areas.

Mechanical Bunks

Cattle are usually fed from both sides. The bunks can serve as lot dividers. The feed center must be near the feeding line.

Width of Bunks:

48" if fed from both sides.
54"-60" if bunk is divided by mechanical feeder.

Throat Height

16"-18"—calves
20"—yearlings
22"-24"—mature cows
30"—mature cows on unscraped, flat apron.

Fenceline Bunks

Cattle are fed from one side. The bunks are usually filled with a power unloading wagon or truck. They can be used with any size of operation and are easily lengthened. Feeding drives take a lot of space, and must be surfaced for all-weather use. Twice as much total bunk length (but not twice as much cost) is required as for bunks where cattle feed from both sides.

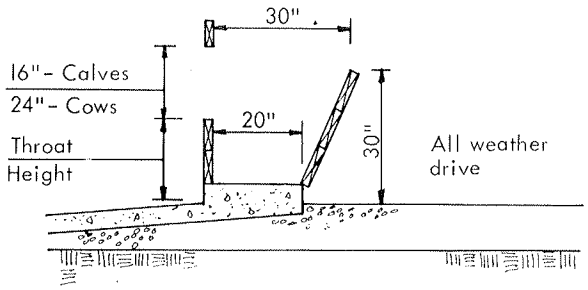

Bunk Around A Silo

These units, home built or available commercially, require a minimum expense for conveying silage. They are difficult to expand for a larger herd, and wind and snow may be a problem.

Apron

An apron sloped 1" per foot will control surface water, will have little manure accumulation near the bunk, and will discourage bunk fouling. A ½" per foot slope is minimum.

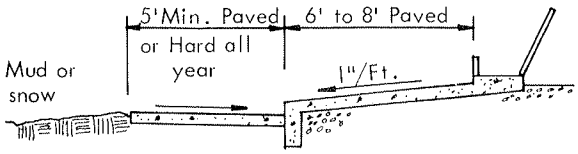

An apron 6'-8' wide plus paved space provides for passage of animals and tractor-scraper.

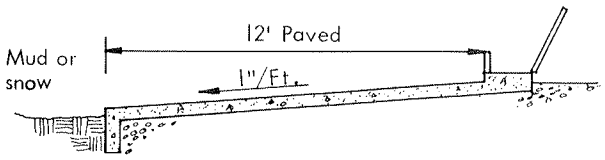

An apron 12'-15' wide is recommended if area below apron will be muddy or drifted with snow part of the year.

Low Floor

Where apron is kept scraped.
Least cost, easiest to build.
Adaptable to any age of stock.

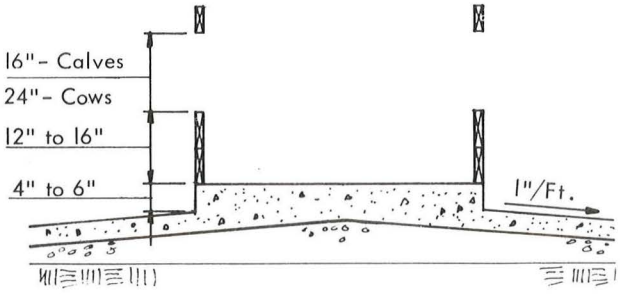

Raised Floor

Where frozen manure, etc. may collect.
Adaptable to any age of stock.

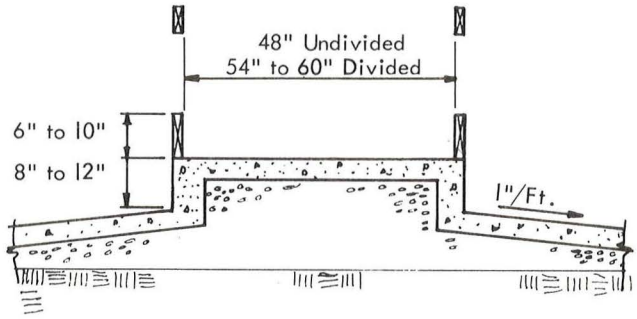

High Floor

When bunks are added over an existing flat pavement, increased height is sometimes recommended.

Most expensive.

Conventional dimensions in flat, unscraped lots.

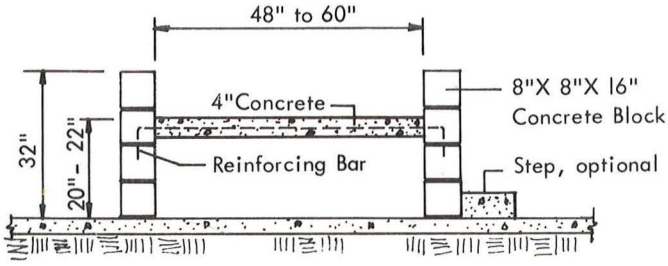

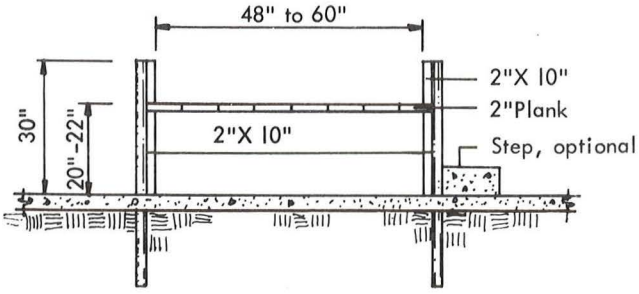

Floor Heights

Indoor mangers commonly are only an inch or two above the cows' feet. Outdoor bunks have been raised two feet or more to help keep animals and dirt out of the bunks.

Covered Bunks

If feed is to be in a bunk for extended periods, weather protection is advisable.

A narrow roof 5'-6" above apron will provide protection of bunk and give minimum shade.

A wide roof high enough to clear cleaning equipment provides shelter for feed and cattle, and summer shade. A wide roof may cause additional snow drifting and may prevent thawing unless oriented about NNE-SSW.

Some dairymen object to cows resting on the paved apron and so provide no shade over the bunk.

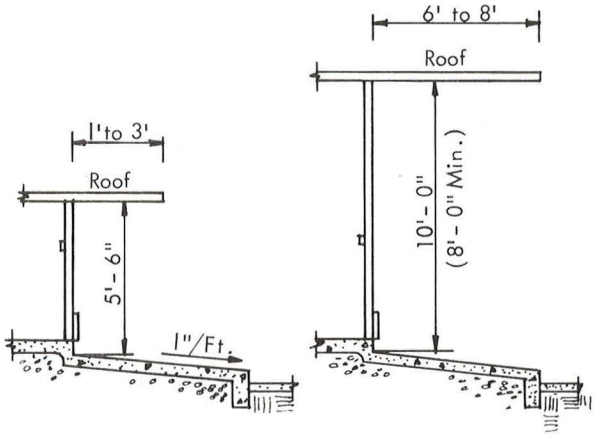

Step for Bunk

A step next to the bunk, especially on aprons with little or no slope, will help keep the bunk clean by preventing the cows from standing along the bunk or backing up to it. Steps protect a bunk from scraping equipment, especially with outside posts. With high-floor bunks, steps reduce throat height.

Install a step on flat (solid or slatted) floors. Optional if apron slopes 1" per foot.

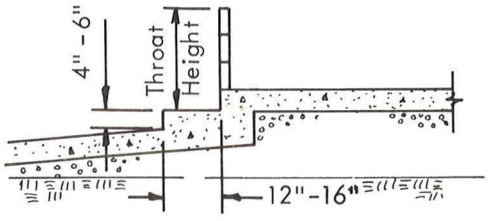

Fenceline Bunks

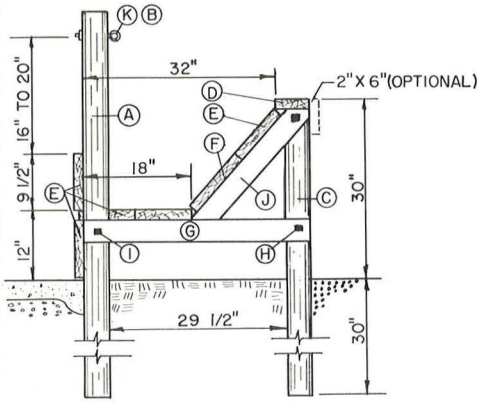

CUTTING LIST
14' Length

Item	No.	Description
A	3	5" Top x 7' Pole
B	1	$\frac{3}{8}$" Cable
C	3	4" Top x 5' Pole
D	1	2" x 6" x 16'-0"
E	5	2" x 10" x 16'-0"
F	1	2" x 12" x 16'-0"
G	4	2" x 4" x 37$\frac{1}{2}$"
H	6	$\frac{1}{2}$" x 8" Bolt
I	3	$\frac{1}{2}$" x 9" Bolt
J	3	2" x 4" x 21"
K	3	$\frac{1}{2}$" x 6" Eye Bolt

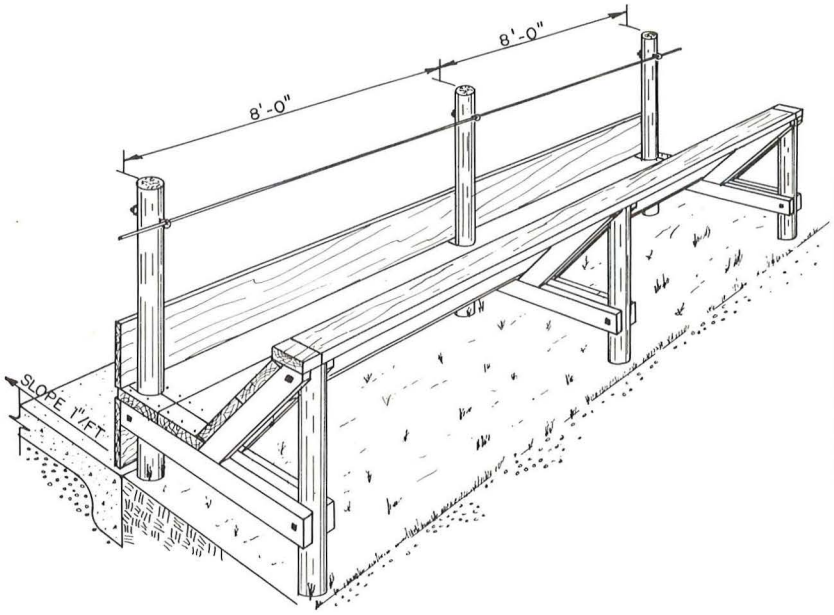

CUTTING LIST
12' Length

Item	No.	Description
A	3	6" Top x 14' Pole
B	7	2" x 6" x 12'-0"
C	3	4" Top x 5' Pole
D	1	2" x 6" x 12'-0"
E	6	2" x 8" x 12'-0"
F	2	2" x 10" x 12'-0"
G	2	$\frac{5}{8}$" x 14" Bolt
H	8	$\frac{1}{2}$" x 4" Bolt
I	4	$\frac{1}{2}$" x 8" Bolts - Galv.
J	6	$\frac{1}{2}$" x 11" Bolts - Galv.
K	4	2" x 4" x 24" or 31"
L	4	2" x 4" x 7'-9"
M	4	2" x 4" x 5'-0"
N	1	12'-0" Eaves Trough
O	4	2" x 8" x 14'-0"

HARDWARE: Galvanized
LUMBER: Pressure Treated
SEE: Fasteners, page 52
Bunk Planning, pages 35 and 36 for floor heights, etc.

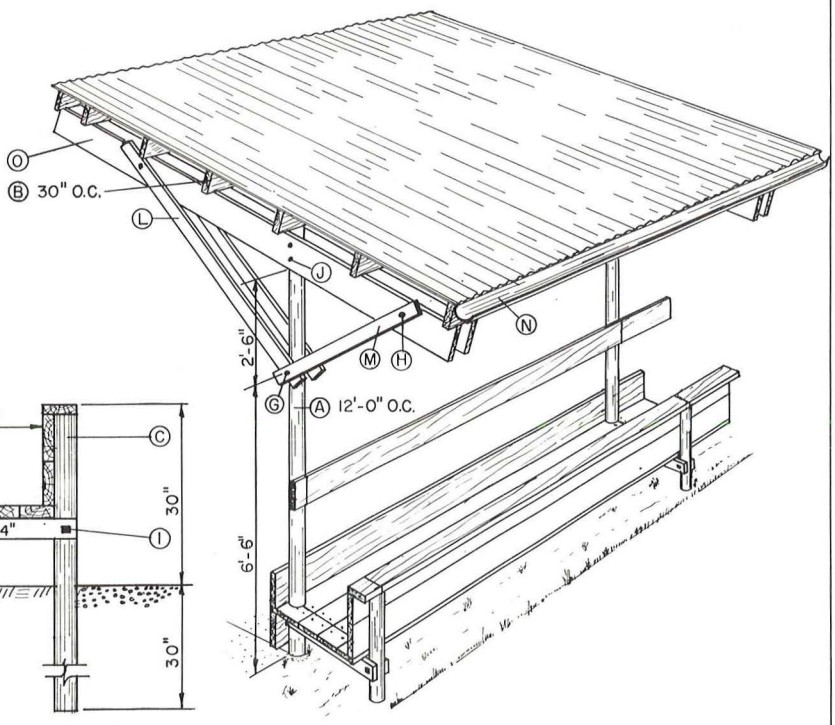

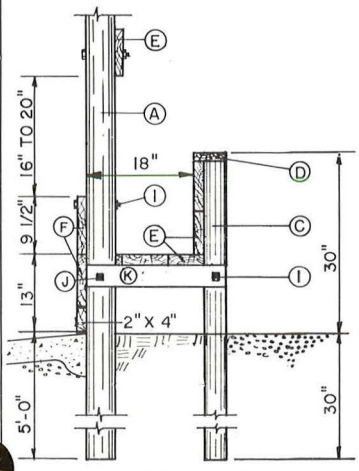

POSTS INSIDE
EASIER LOT SCRAPING

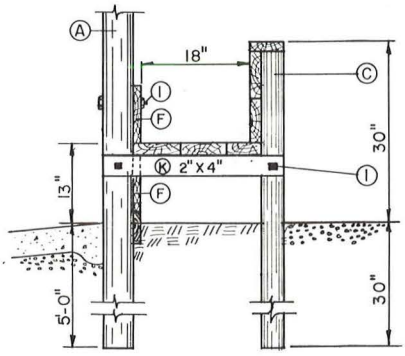

POSTS OUTSIDE
EASIER BUNK CLEANING

Fenceline Bunks

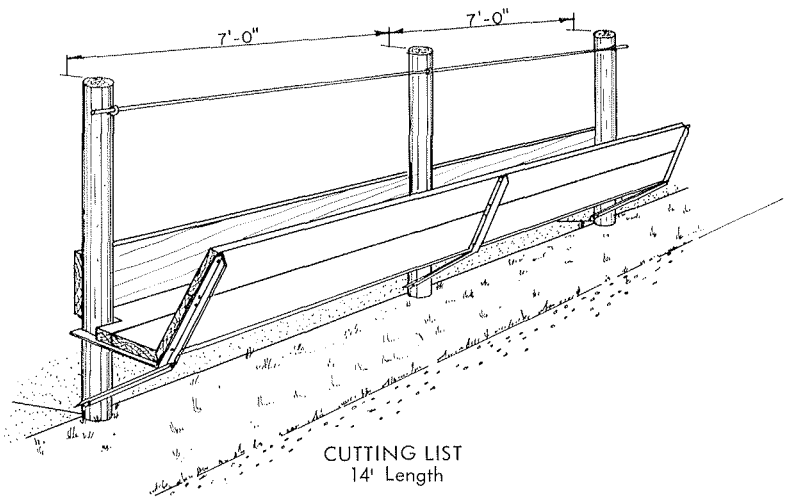

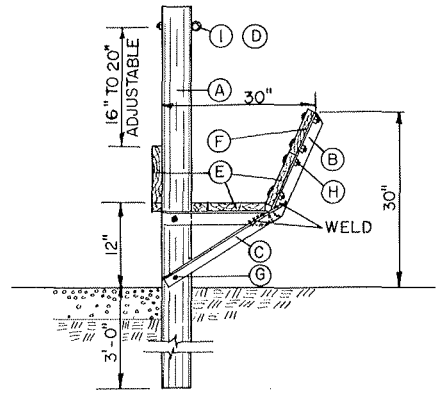

CUTTING LIST
14' Length

Item	No.	Description
A	3	5" Top x 7'-0" Post
B	3	2" x 2" x $\frac{1}{4}$" x 3'-0" Angle
C	3	2" x 2" x $\frac{1}{4}$" x 24" Angle
D	1	$\frac{3}{8}$" Cable
E	4	2" x 10" x 14'-0"
F	1	2" x 8" x 14'-0"
G		$\frac{3}{8}$" x 6" Bolt
H		$\frac{3}{8}$" x 3" Bolt
I	3	$\frac{3}{8}$" x 6" Eye Bolt

HARDWARE: Galvanized
LUMBER: Pressure Treated
SEE: Fasteners, page 52
Bunk Planning, pages 35 and 36 for floor heights, etc.

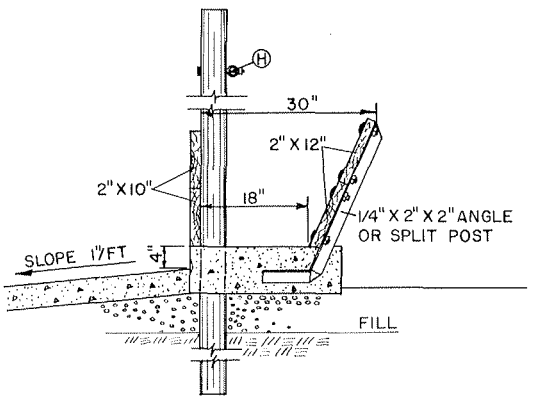

OPTION

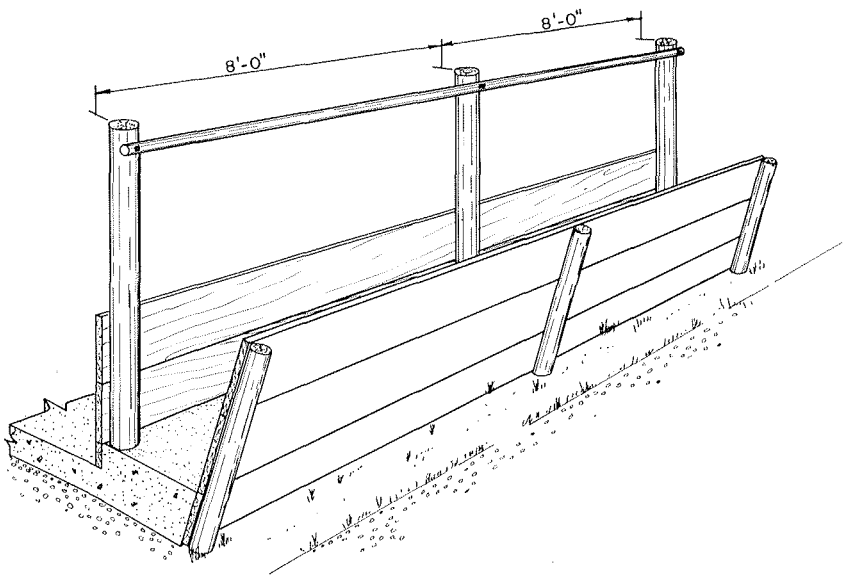

CUTTING LIST
16' Length

Item	No.	Description
A	3	4" Pipe - 7' Long
B	3	3" Pipe - 4' Long
C	2	2" x 10" x 16'-0"
D	2	2" x 12" x 16'-0"
E	1	2" Pipe - 16' Long
F	1	2" x 8" x 16'-0"
G	1	2" x 4" x 16'-0"
H		$\frac{3}{8}$" x 8" Bolt
I		$\frac{3}{8}$" x 6" Bolt

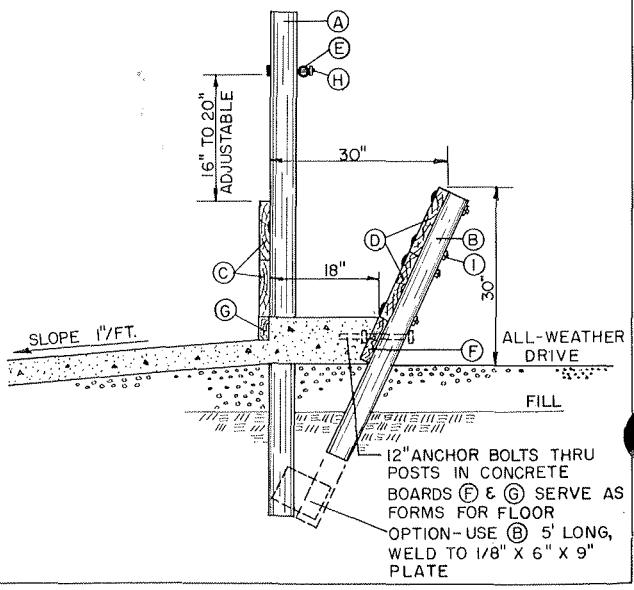

Fenceline Bunk

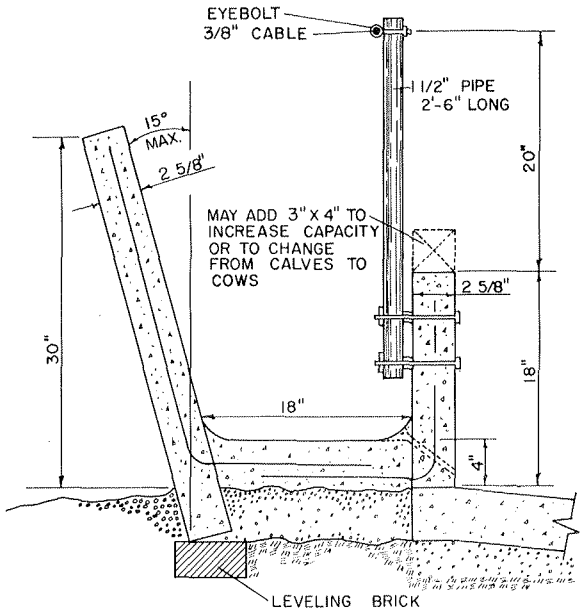

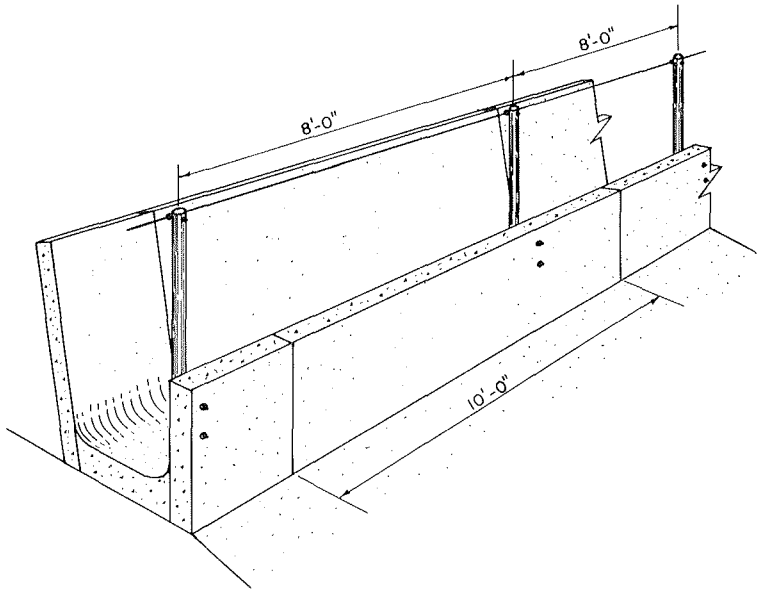

Commercial pre-cast concrete bunks are available in many areas. Slope apron 1" per foot away from bunk; follow maker's instructions for bunk foundation. Front of bunk should be flush with apron, or openings filled so manure cannot accumulate under the bunk.

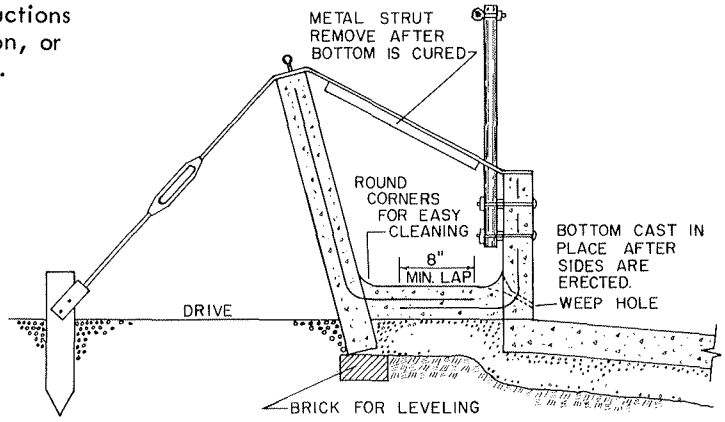

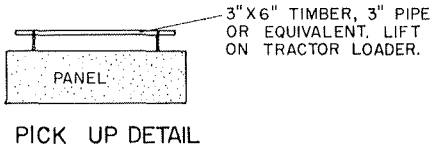

PICK UP DETAIL

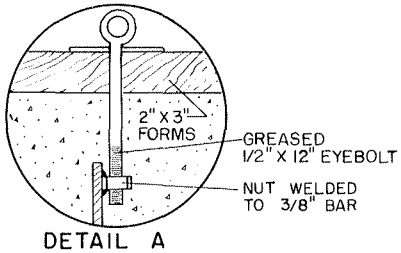

DETAIL A

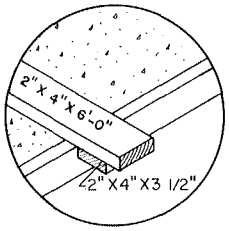

DETAIL B

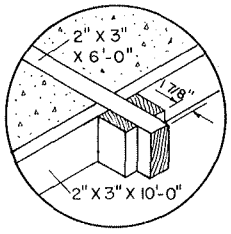

DETAIL C

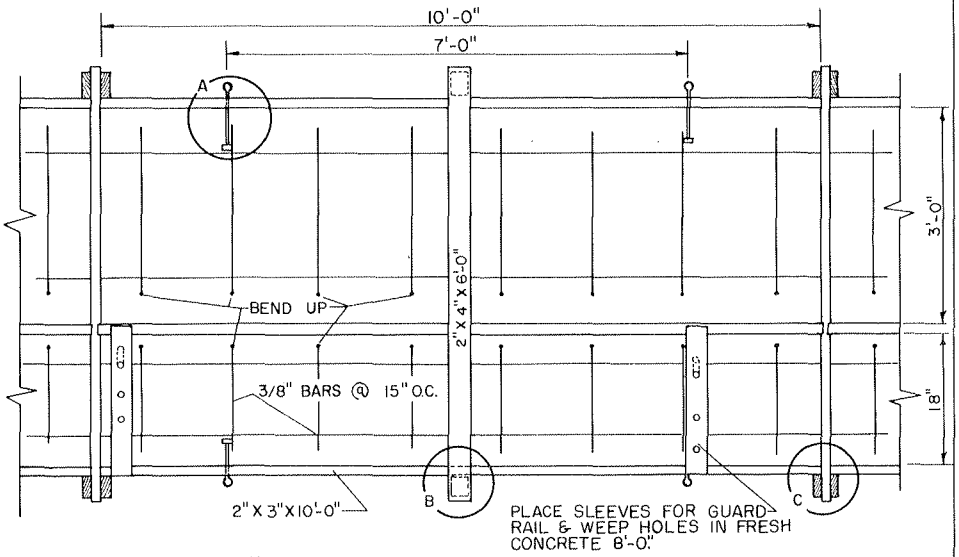

FORMING PLAN

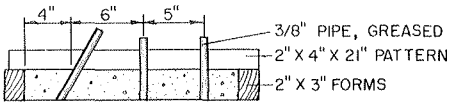

Covered Bunks

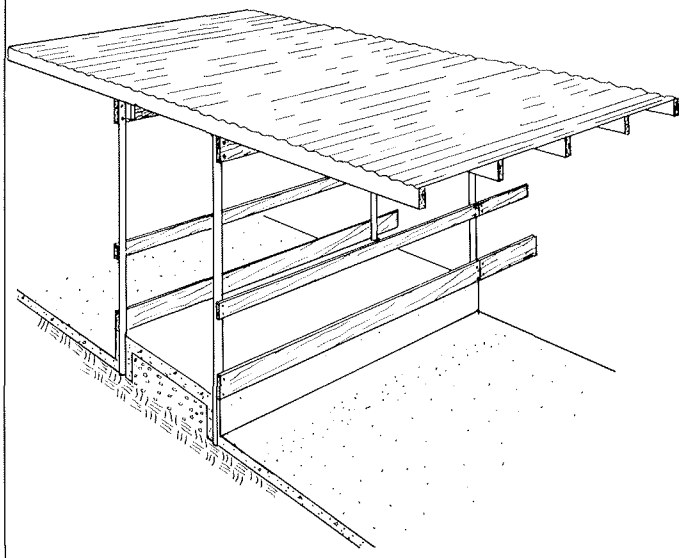

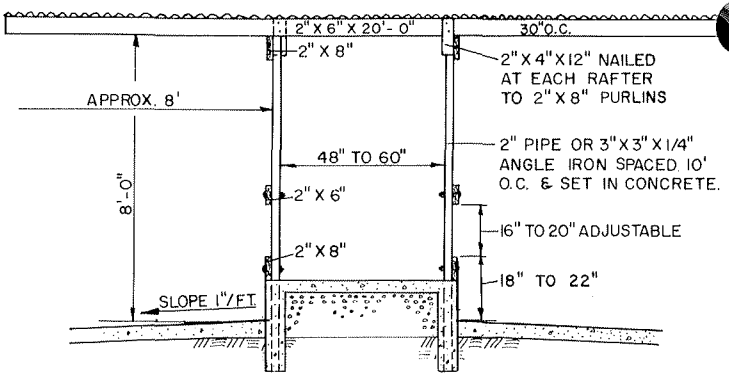

FOR USE WHERE BUNK SLOPES DOWNHILL

BILL OF MATERIALS
10' Section

No.	Size
6	2" x 6" x 20'-0"
4	2" x 8" x 10'-0"
4	2" x 10'-0" Pipe
1	2" x 4" x 10'-0"
2	Squares of Roofing

HARDWARE: Galvanized
LUMBER: Pressure Treated
SEE: Fasteners, page 52
Bunk Planning, pages 35 and 36 for floor heights, etc.

NARROW ROOF OPTION

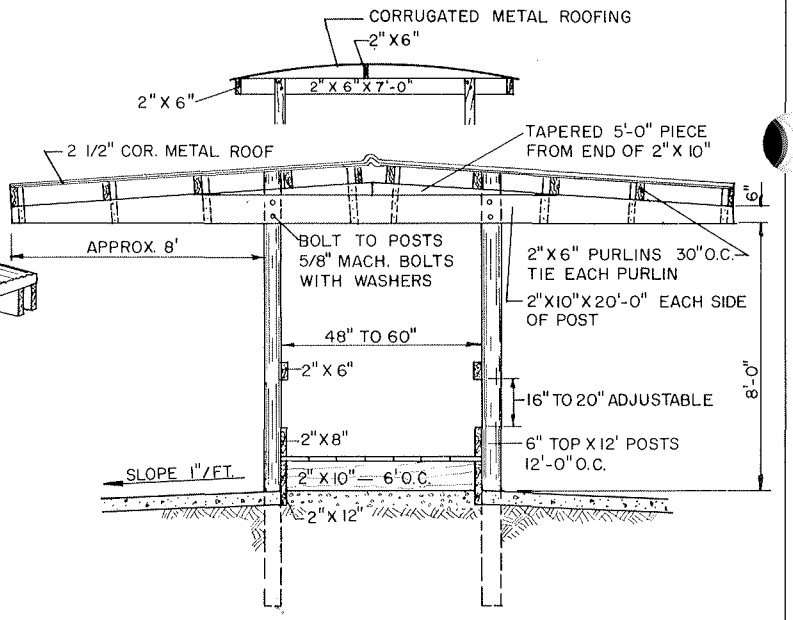

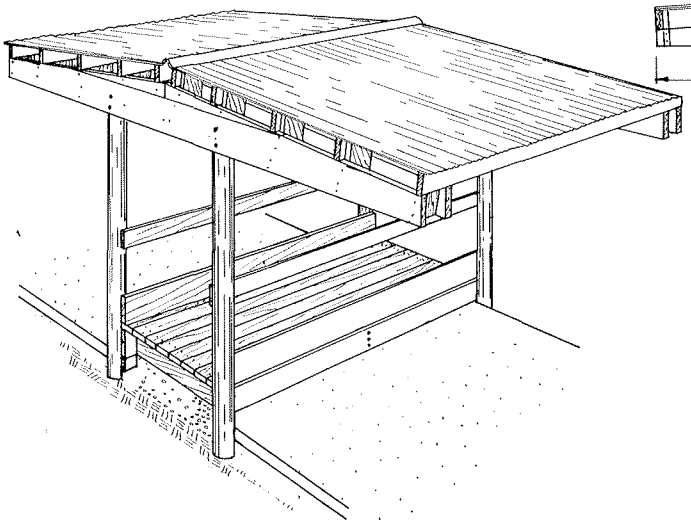

BILL OF MATERIALS
12' Section

No.	Size
4	2" x 10" x 20'-0"
12	2" x 6" x 12'-0"
2	2" x 8" x 12'0"
3	2" x 10" x 4'-5'
2	2" x 6" x 10'-0" for Purlin Ties
	2" Tongue & Groove Flooring
4	6" Top x 12' Poles
2.4	Squares of Roofing
8	5/8" x 10" Bolt
2	2" x 12" x 12'-0"
2	2" x 8" x 12'-0"

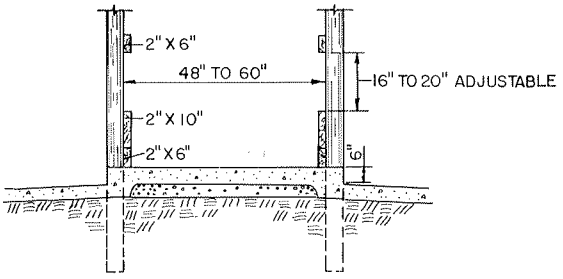

OPTION

Mechanical Bunks

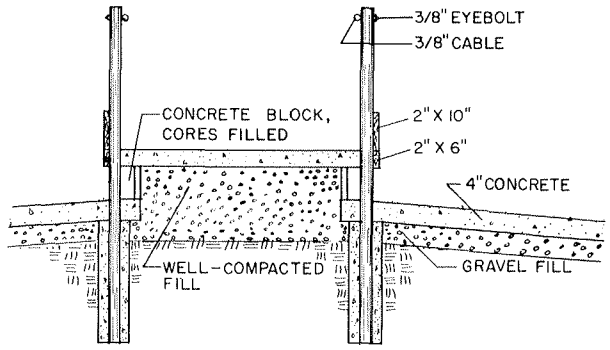

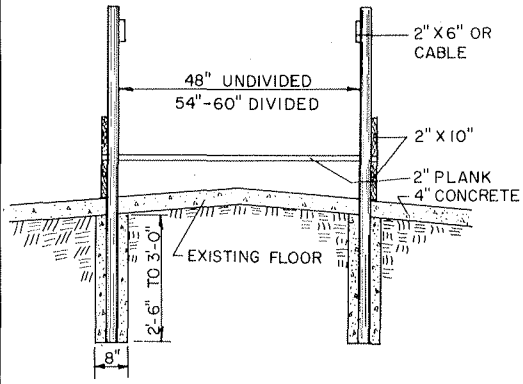

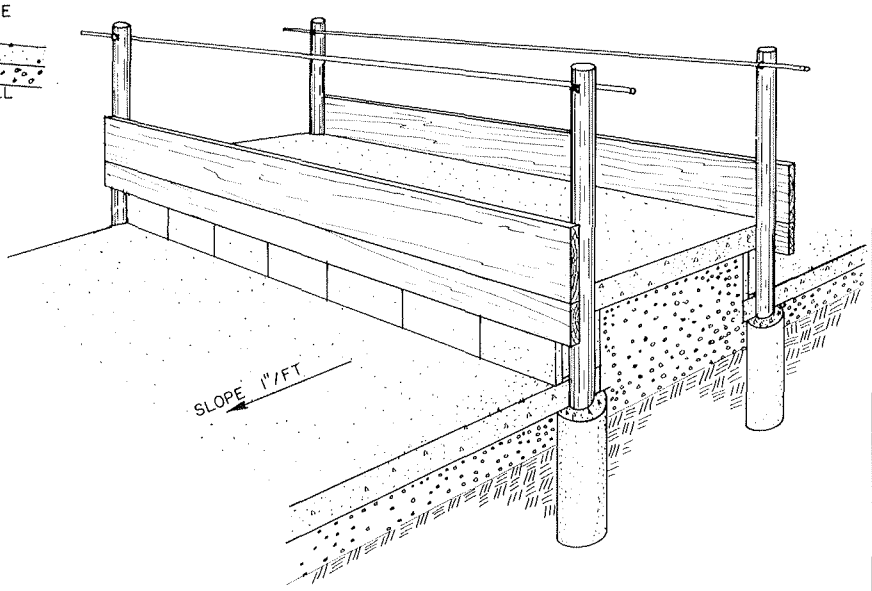

HARDWARE: Galvanized
LUMBER: Pressure Treated
SEE: Fasteners, page 52
Bunk Planning, pages 35 and 36 for floor heights, etc.

POSTS

Wood or Pipe Posts
7' to 10' O.C.
Pipe Post - $1\frac{1}{2}$" Tops Closed
Wood Post - 3"
Steel Channel - $1\frac{1}{2}$" x 3"

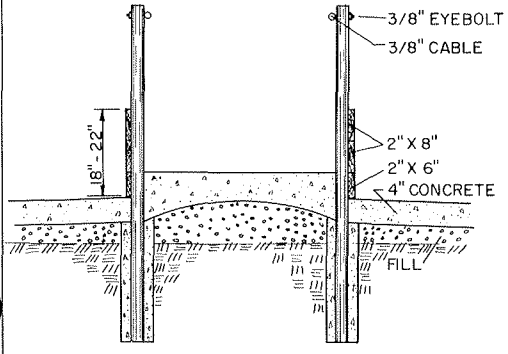

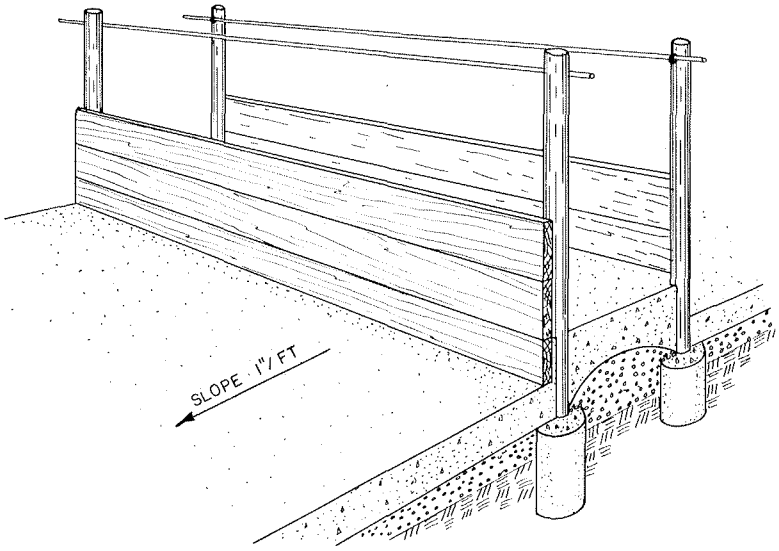

Feeding Fences

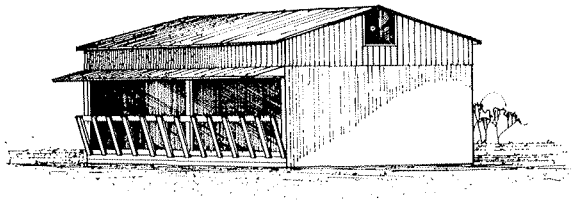

FEEDING FENCE FOR POLE BARN

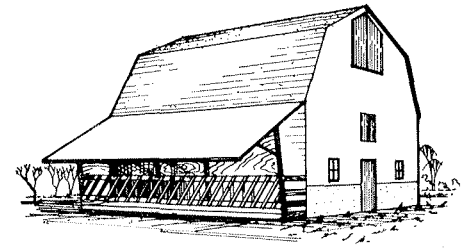

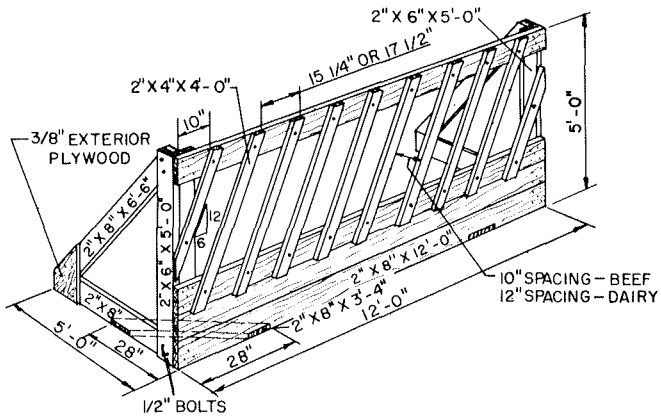

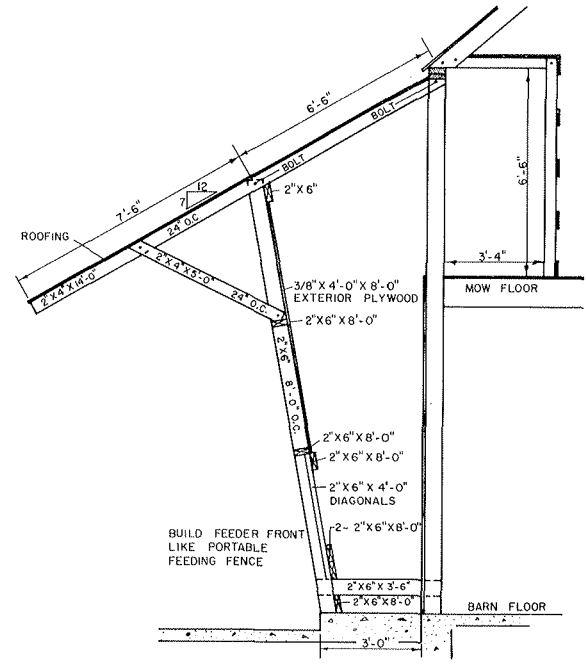

BARN WALL HAY FEEDER

BOX FEEDER

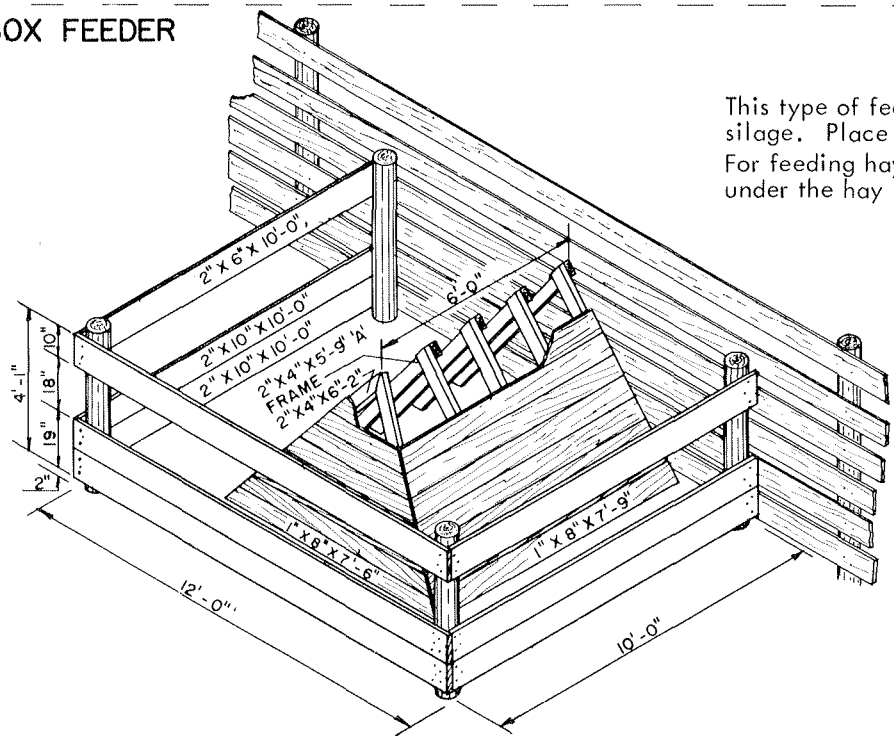

This type of feeding fence opening works well for silage. Place feeder next to service alley.
For feeding hay, the feeder may be against a barn wall under the hay mow door.

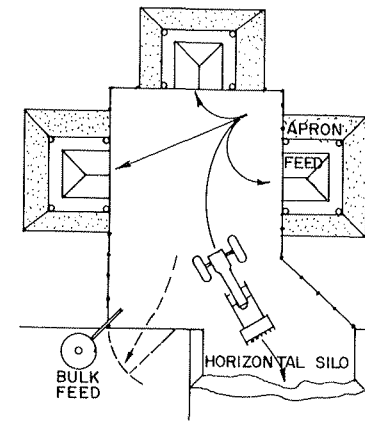

Feeding Fences

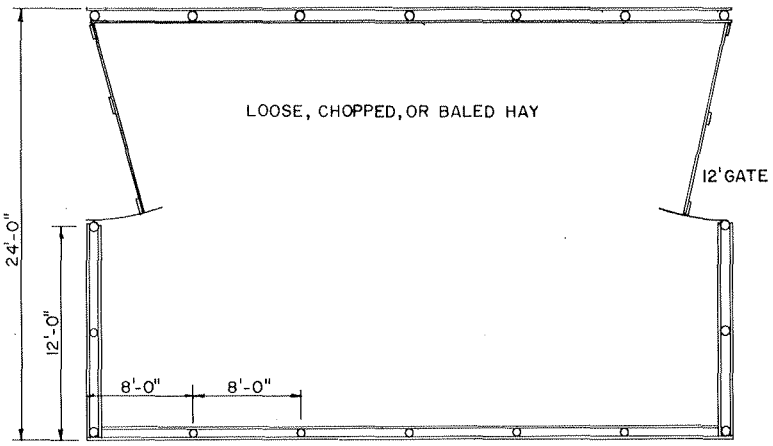

HAY STORAGE—FEEDING PEN

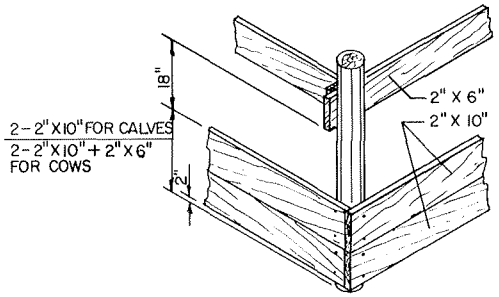

CORNER DETAIL

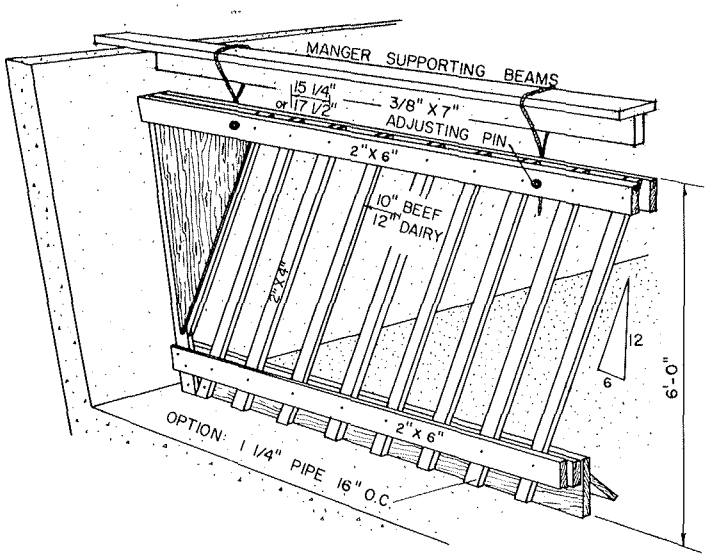

MANGER SUPPORTING BEAMS

SILO WIDTH	14'	18'	25'
LUMBER	20d NAILS 16" O.C. 2"X6"	2"X8"	10d NAILS 16" O. C.
PIPE	3"	3 1/2"	4"

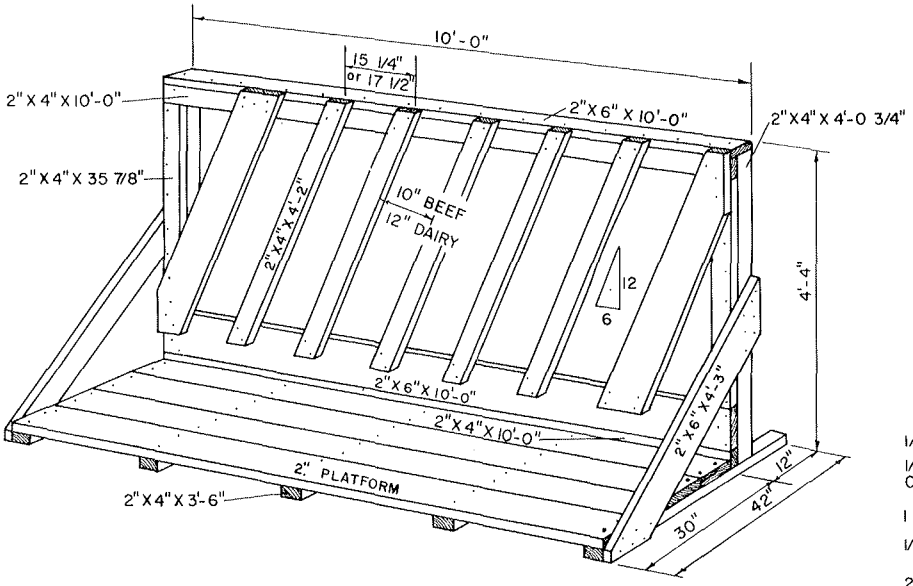

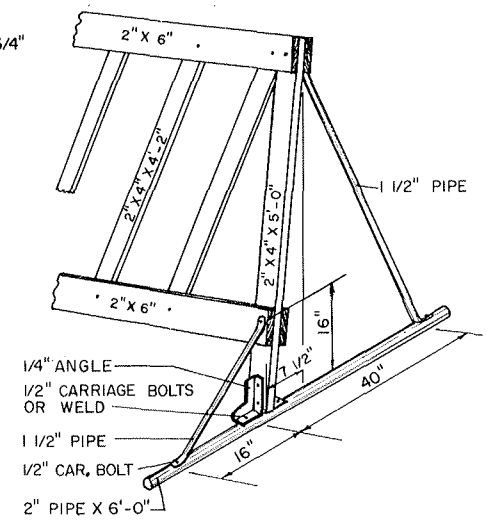

Lot Bunks

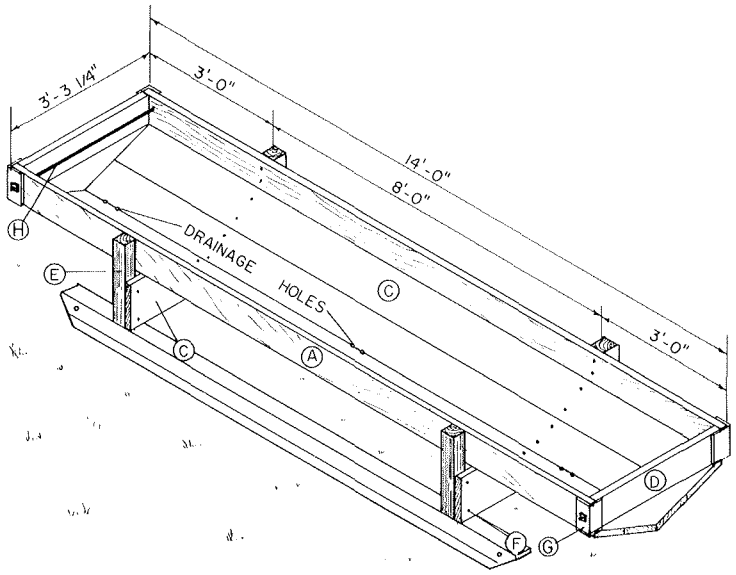

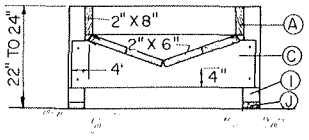

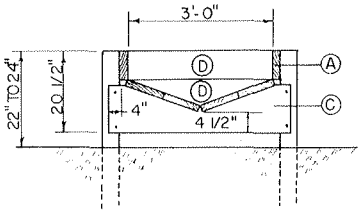

OPTION

CUTTING LIST

Item	No.	Description
A	2	2" x 8" x 14'-0"
B	4	2" x 10" x 14'-0"
C	2	2" x 12" x 3'-10"
D	4	2" x 8" x 3'-0"
E	4	4" x 4" x 17" To 19"
F	8	$\frac{1}{2}$" x $6\frac{1}{2}$" Bolts & Washers
G	4	$1\frac{1}{2}$" x $1\frac{1}{2}$" x $\frac{1}{4}$" Angle Iron
H	2	$\frac{1}{2}$" x 3'-6" Tie Rod
I	2	4" x 4" x 12'-0"
J	2	2" x 4" x 12'-0"

BUNK HEIGHT
Heights shown assume a cleaned, well-drained site. If mud, snow, or manure may accumulate, raise bunks to 30" for cows.

BUNK CAPACITY
Bunks may be up to 60" wide and/or 12" to 14" deep for increased capacity.

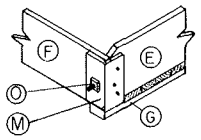

CORNER FRAMING

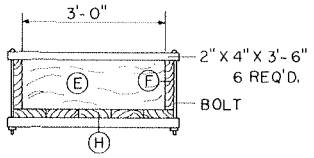

ALTERNATE FRAMING

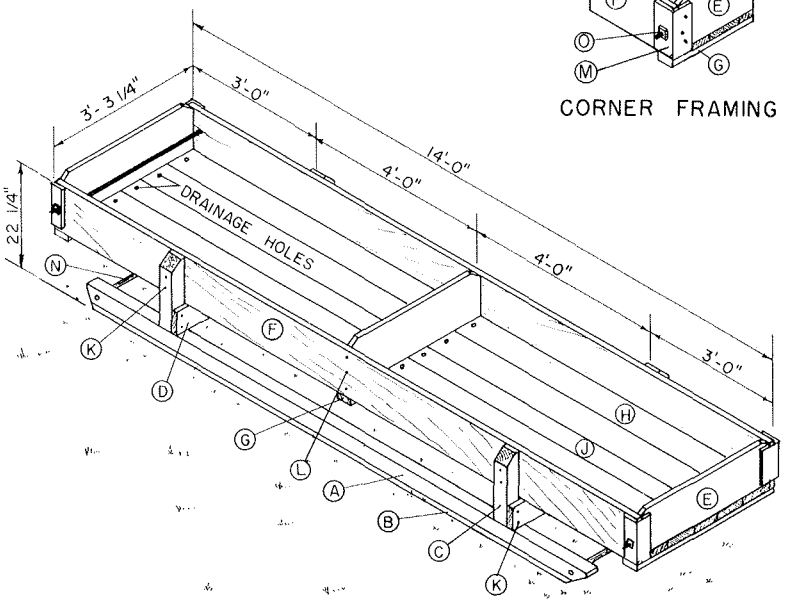

CUTTING LIST

Item	No.	Description
A	2	4" x 4" x 12'-0"
B	2	2" x 4" x 12'-0"
C	4	4" x 4" x 17"
D	2	2" x 6" x 3'-$10\frac{1}{2}$"
E	3	2" x 12" x 3'-0"
F	2	2" x 12" x 14'-0"
G	3	2" x 4" x 3'-$3\frac{1}{4}$"
H	4	2" x 8" x 14'-0"
J	1	2" x 6" x 14'-0"
K	16	$\frac{1}{2}$" x 6" Bolts & Washer
L	6	$\frac{3}{8}$" x 4" Lag Screw
M	4	$1\frac{1}{2}$" x $1\frac{1}{2}$" x $\frac{1}{4}$" Angle Iron
N	2	1" Pipe - 3'-$3\frac{1}{4}$" Long
O	2	$\frac{1}{2}$" x 3'-6" Tie Rod

Self-Feeding Wagon

CUTTING LIST

ITEM	NO.	DESCRIPTION
A	2	4" x 6" x 14'-0"
B	5	4" x 4" x 6'-8"
C	2	2" x 4" x 3'-4"
D	8	2" x 10" x 14'-0"
E	5	2" x 4" x 14'-0"
F	12	2" x 4" x 67½"
G	2	2" x 4" x 6'-10½"
H	8	2" x 4" x 71½"
I	2	2" x 6" x 14'-0"
J	4	1" x 10" x 6'-11½"
K	4	1" x 8" x 6'-11½"
L	12	1" x 6" x 16½"
M	14	1" x 8" x 14'-0"
N	2	2" x 2" x 24"
O	4	2" x 2" x 12"
P	17	1" x 8" x 6'-11"
Q	1	1" x 6" x 6'-10"
R	4	2" x 4" x 5'-10"
S	4	1" x 2" x 4"
T	4	4" x 4" x ¼" x 12" Angles
U	4	2" x 2" x ⅜" x 4" Angles
V	20	⅜" x 6½" Bolts
W	24	⅜" x 4½" Bolts
X	4	½" x 12" Bolts
Y	6	½" x 10" Bolts
Z	48	⅜" x 6" Bolts
AA	28	⅜" x 3½" Bolts
BB	14	⅜" x 5" Bolts
CC	24	⅜" x 2½" Bolts
DD	12	5" Strap Hinges
EE	96	¼" x 2" F.H. Stove Bolts
FF	4	Heavy Duty Sliding Bolts
GG	16	⅜" x 2½" Lag Screws
HH	8	3/16" x 2½" x 7" Straps
JJ	4	4" Hook and Eye

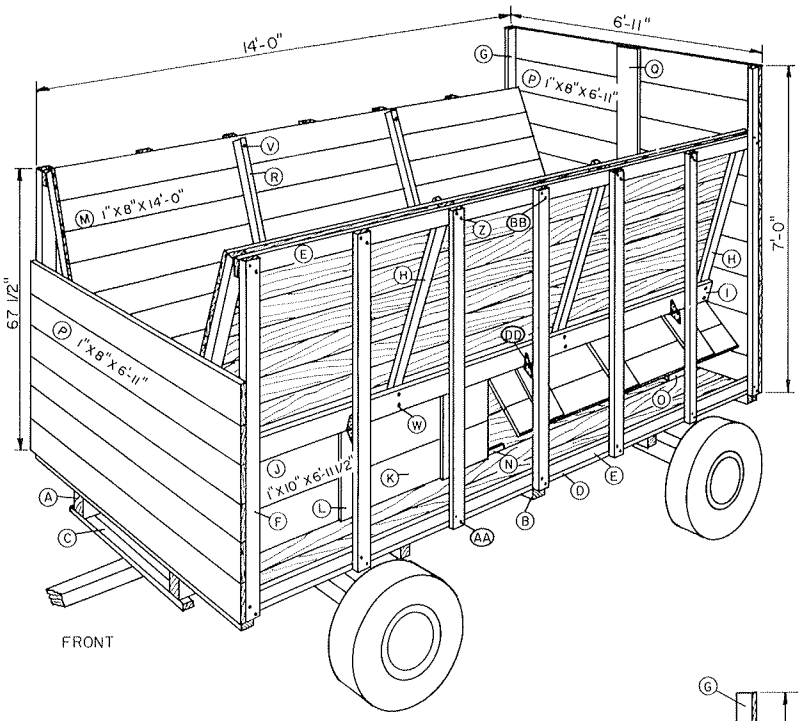

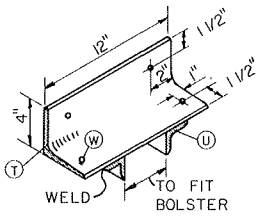

DETAIL "A"

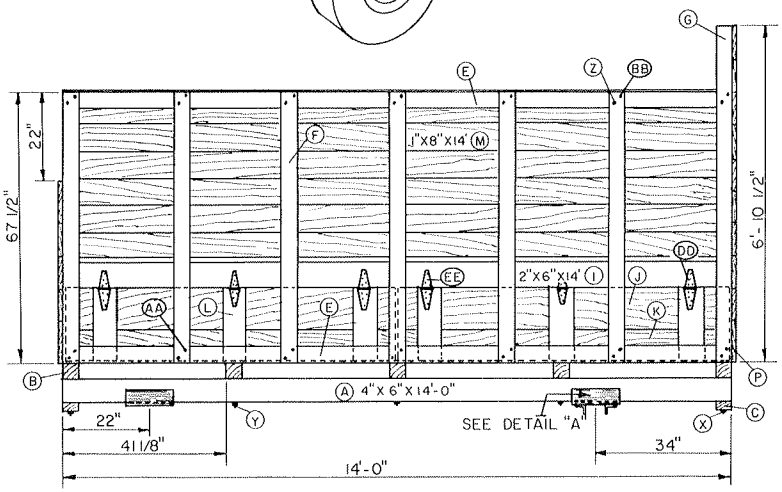

SIDE ELEVATION

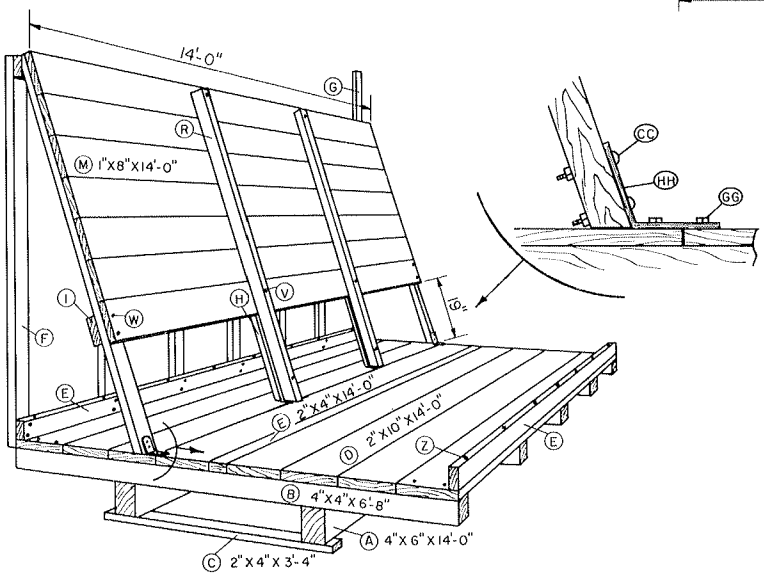

FRAMING PERSPECTIVE

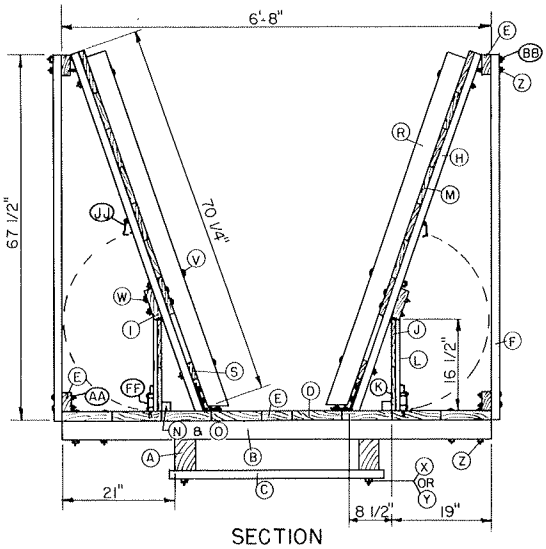

SECTION

Silage Carts

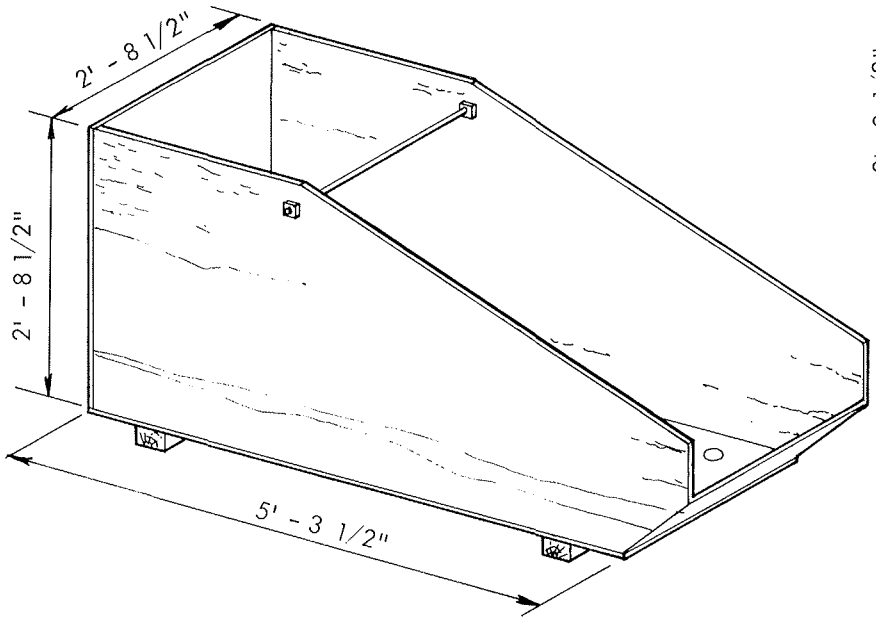

30 BU. CART

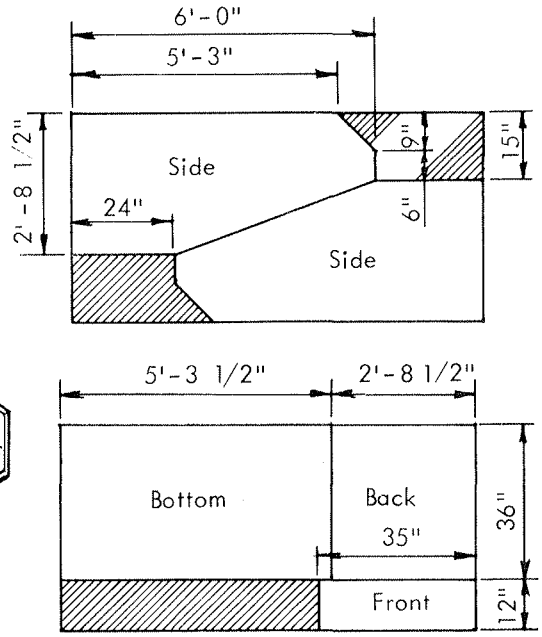

1/2" EXTERIOR PLYWOOD

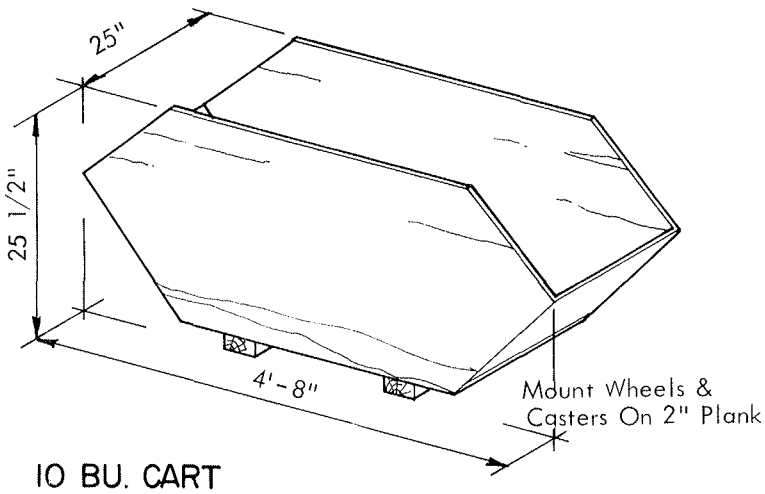

10 BU. CART

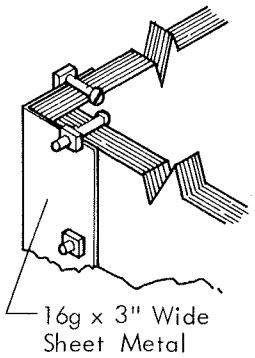

CORNER DETAIL

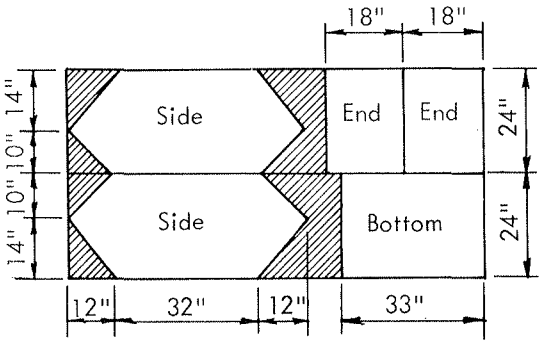

1/2" EXTERIOR PLYWOOD

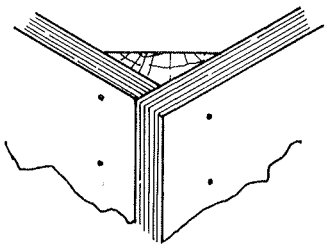

ALTERNATE CORNER

Mineral Feeders

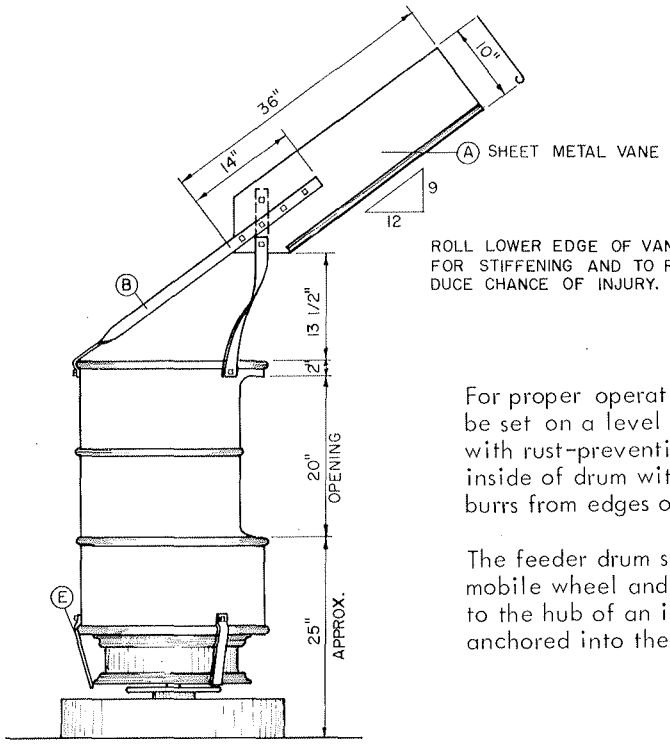

ELEVATION

CUTTING LIST

Item	No.	Description
A	1	12" x 36" x 16-20 Gage Sheet Metal
B	1	3/16" x 1½" x 40" Strap
C	1	3/16" x 1½" x 22" Strap
D	1	3/16" x 1½" x 28" Strap
E	3	3/16" x 1½" x 8" Strap
	12	⅜" Bolts

For proper operation, the feeder should be set on a level surface. Paint outside with rust-preventive coating. Coat inside of drum with asphalt paint. Remove burrs from edges of opening cut in drum.

The feeder drum swivels on a front automobile wheel and axle unit which is welded to the hub of an implement wheel or anchored into the concrete fill.

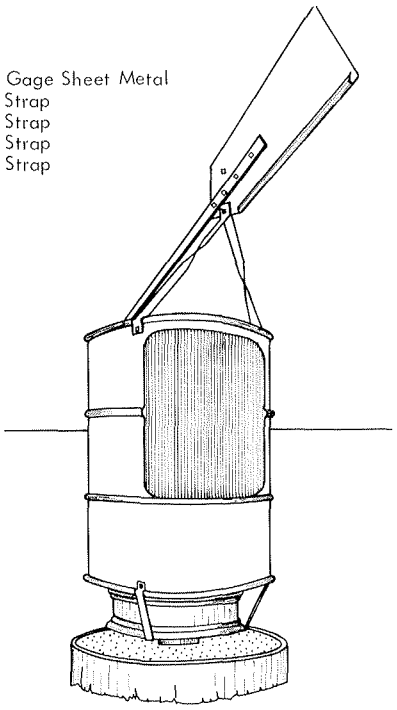

WEATHERVANE

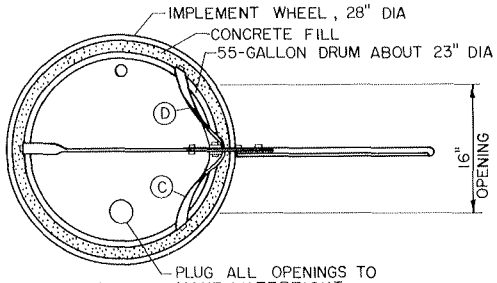

PLAN

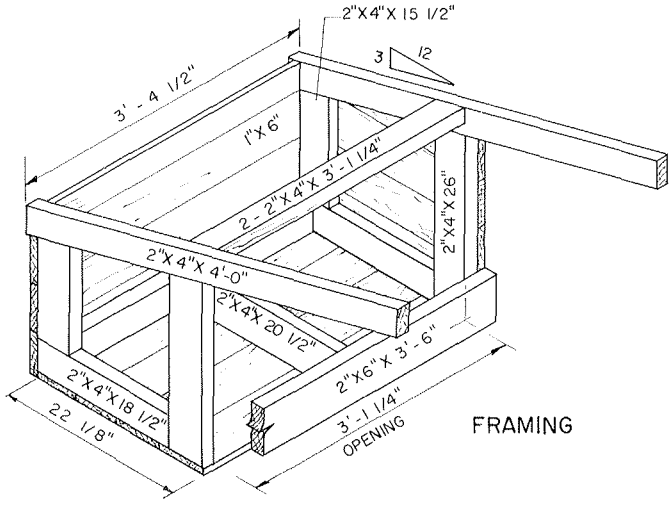

FRAMING

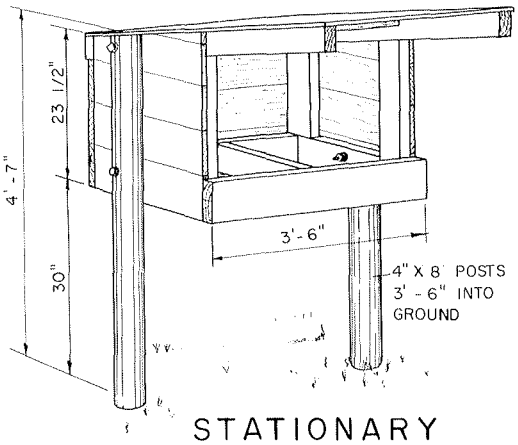

STATIONARY

Covered Hay Rack

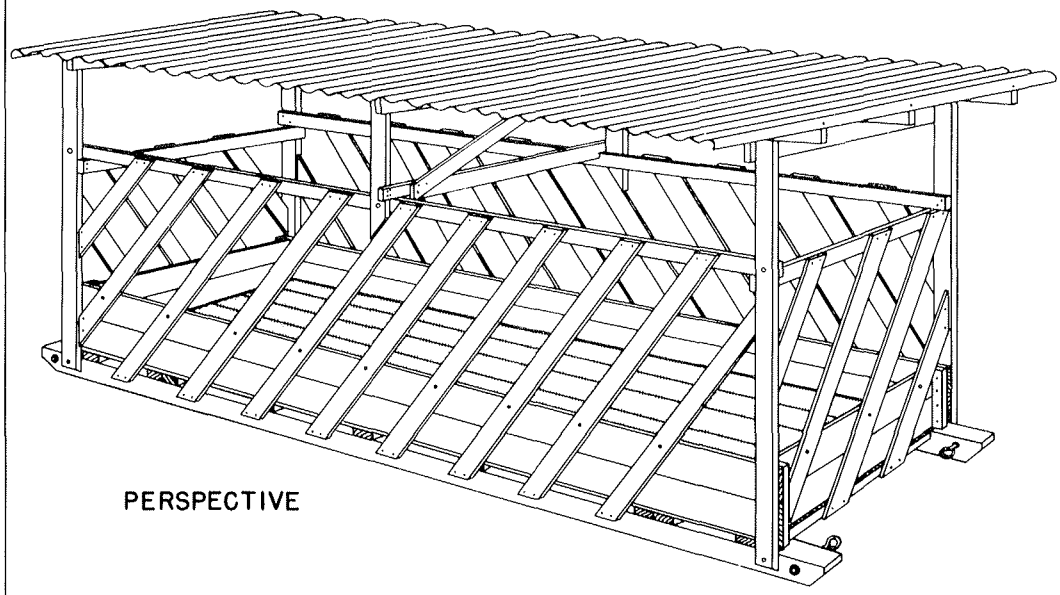

NOTES:

WOOD PRESSURE TREATED WITH PENTACHLOROPHENOL

NAILS AND BOLTS SHOULD BE GALVANIZED

8d NAILS USED FOR SLATS SIDES AND FLOOR

MATERIAL LIST:

13- 1¼"x4¼"x10'- SLATS AND BRACES
1- 4¼"x4¼"x8'- SPREADERS
2- 4¼"x6¼"x16'-SKIDS
11- 1"x8¼"x14'-BUNK
4- 2¼"x4¼"x16'
5- 2¼"x4¼"x14'
3- 2¼"x4¼"x8'

HARDWARE:

8-SHEETS 2½"CORRUGATED METAL -7' LONG ROOFING NAILS
8d-5 LB.
10d-1 LB.
20d-1 LB.
24- ⅜"x 2½" BOLTS.
4- ⅜"x 7" BOLTS.
6- ⅜"x 5" BOLTS.
4- EYE BOLTS ⅝"

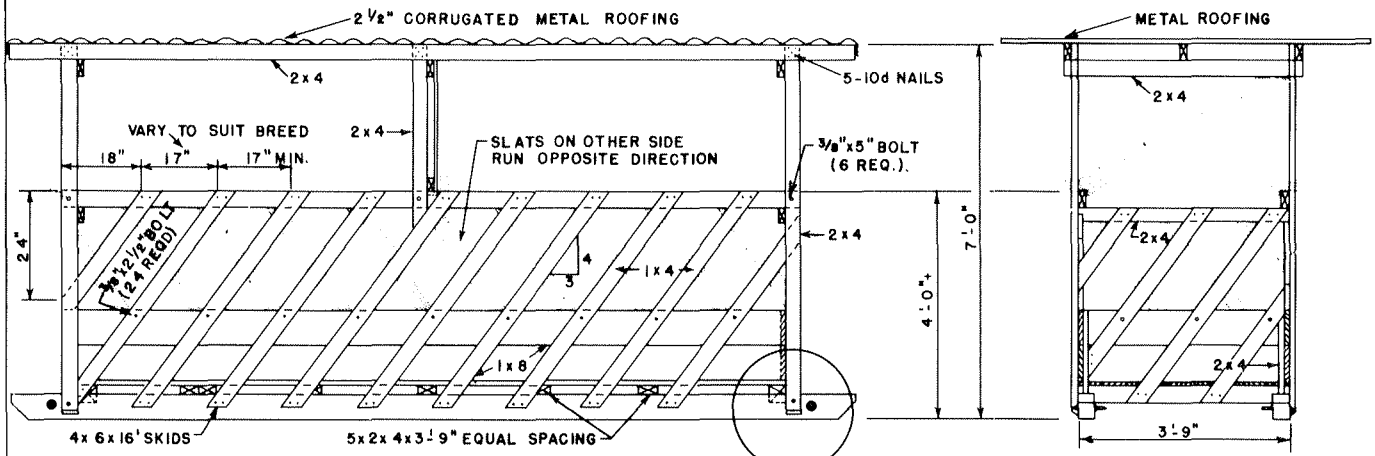

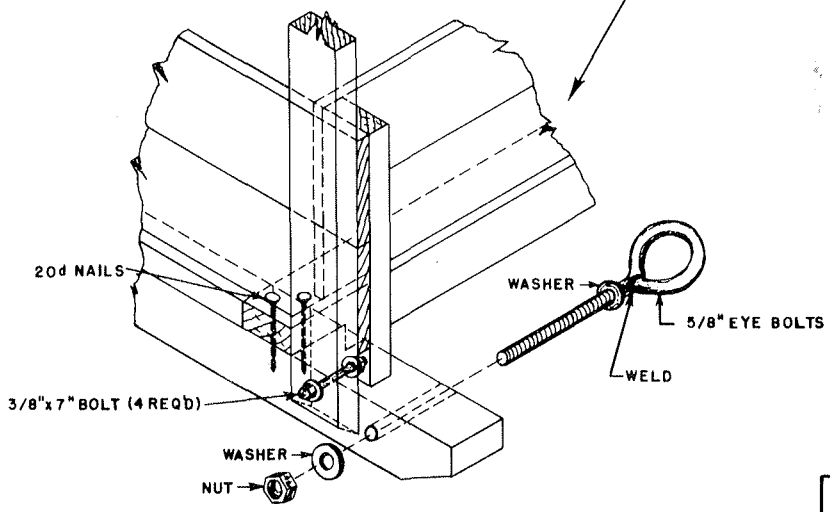

CATTLE FEEDING RACK FOR HAY & SILAGE			
USDA	'61	EX. 5925	SHEET 1 OF 1

Waterers

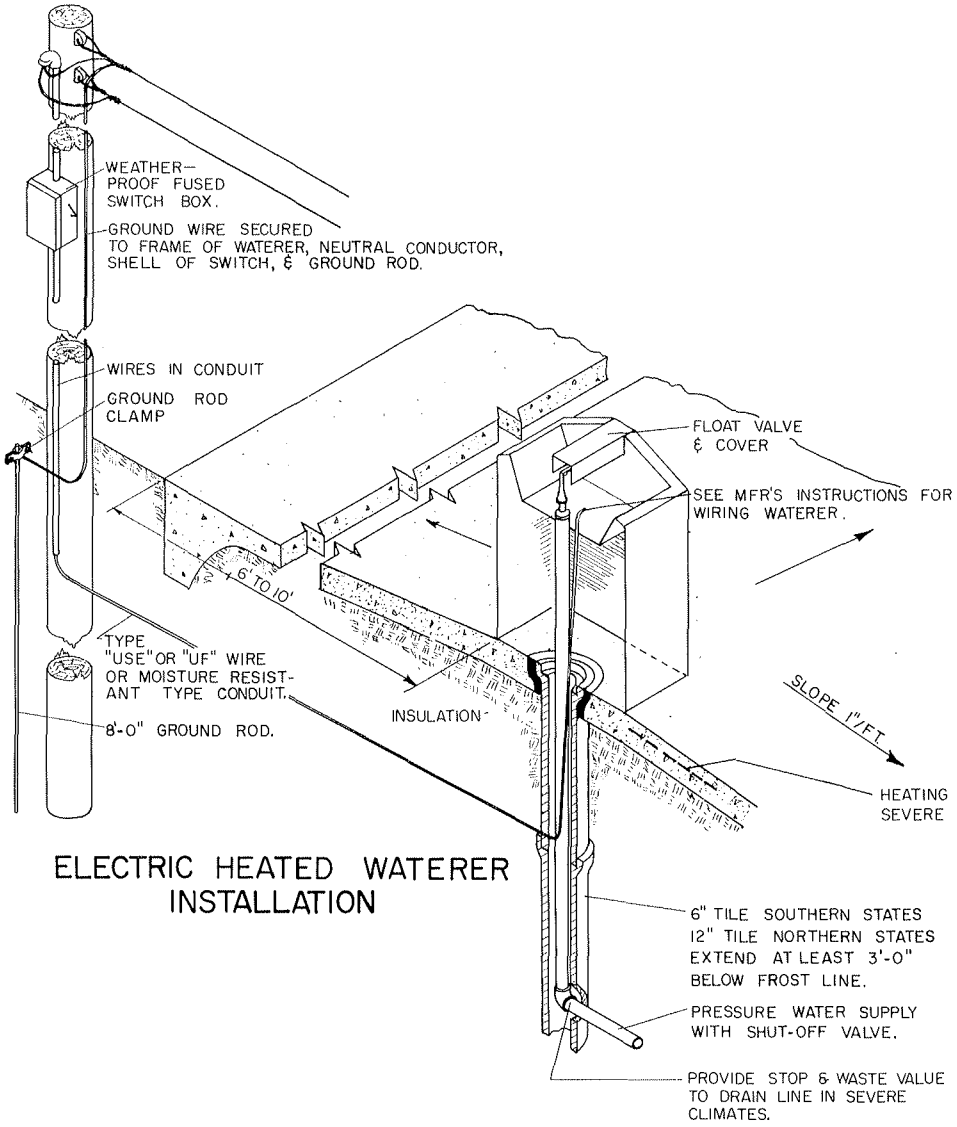

ELECTRIC HEATED WATERER INSTALLATION

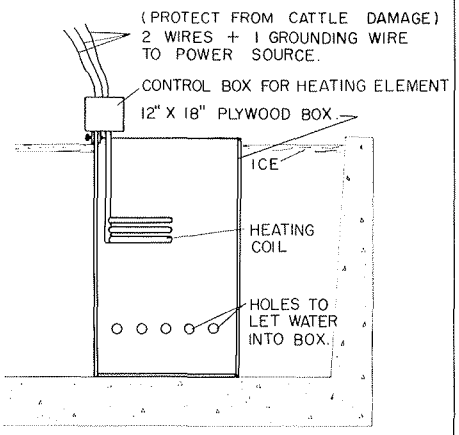

STOCK TANK HEATER

INSTALL BOX AROUND INLET AND HEATER TO REDUCE VOLUME OF WATER TO BE HEATED.

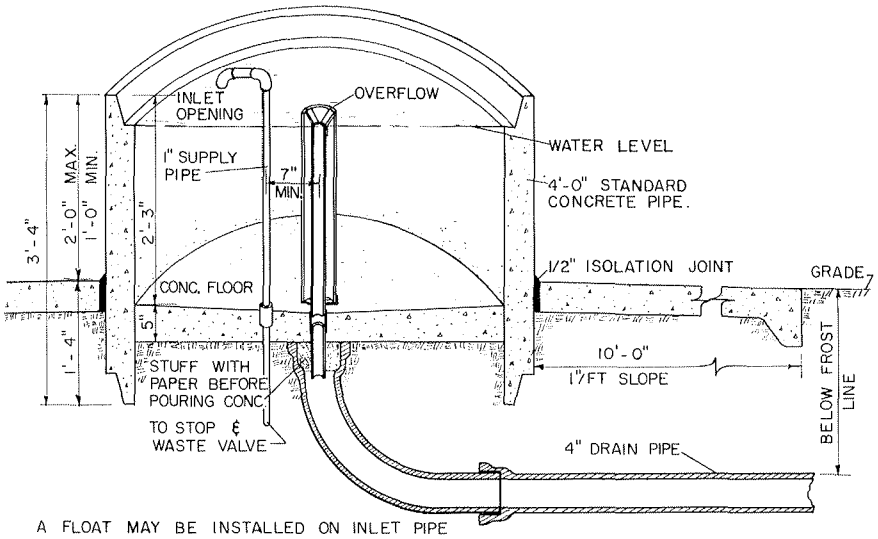

A FLOAT MAY BE INSTALLED ON INLET PIPE TO CONTROL THE LEVEL AND FLOW OF WATER.

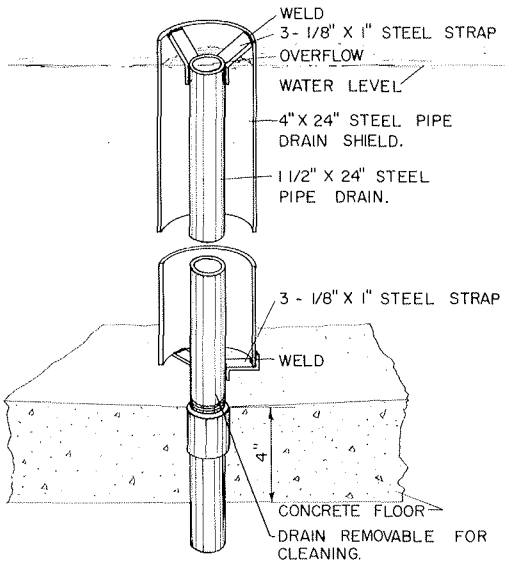

OVERFLOW DETAIL

CONTINUOUS FLOW WATERER

Waterers

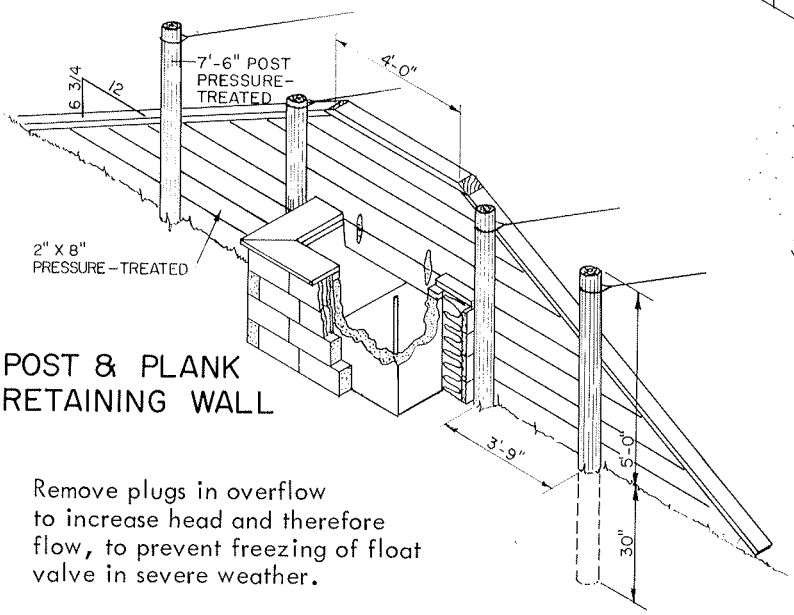

POST & PLANK RETAINING WALL

Remove plugs in overflow to increase head and therefore flow, to prevent freezing of float valve in severe weather.

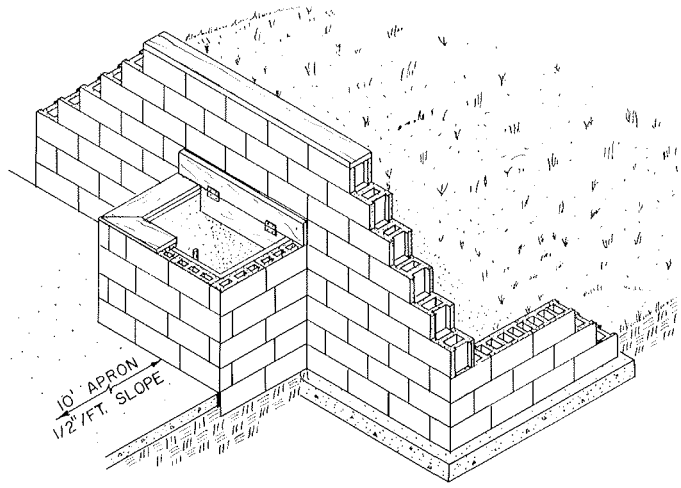

MASONRY RETAINING WALL

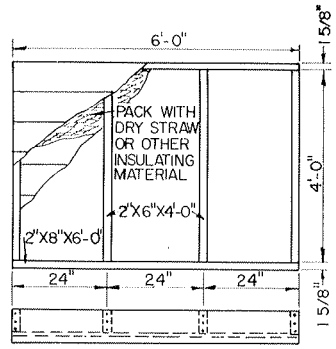

FRAMING FOR TANK COVER

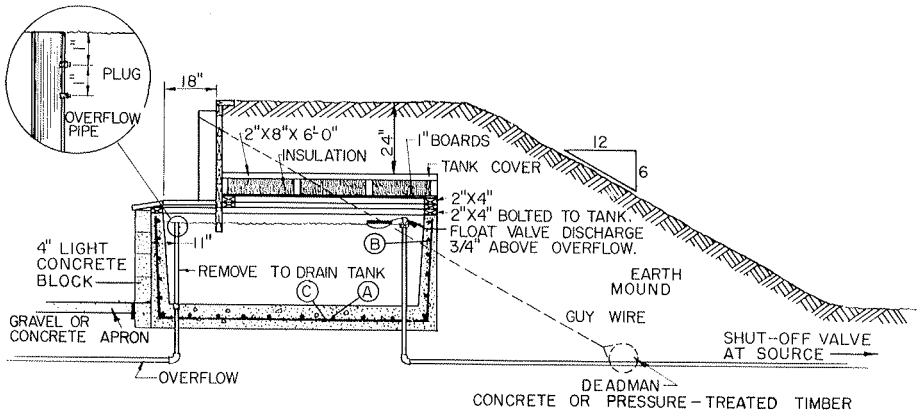

RECTANGULAR TANK

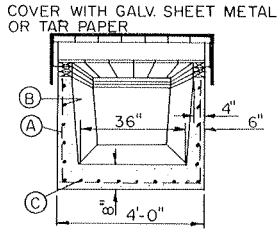

REINFORCING BARS

A	8	# 2(1/4") X 8'-6", 6" O.C.
B	6	# 2(1/4") X 20'-0", 6" O.C.
C	6	# 2(1/4") X 12'-9", 6" O.C.

CONCRETE FORMS

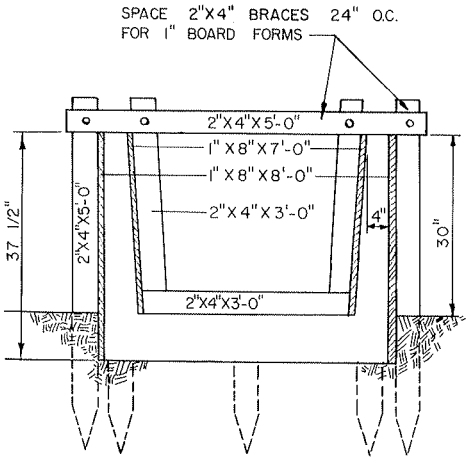

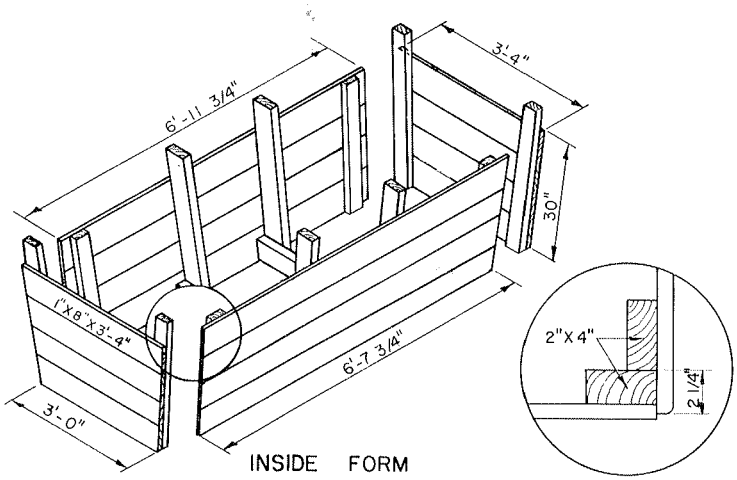

INSIDE FORM

Windbreak Planning

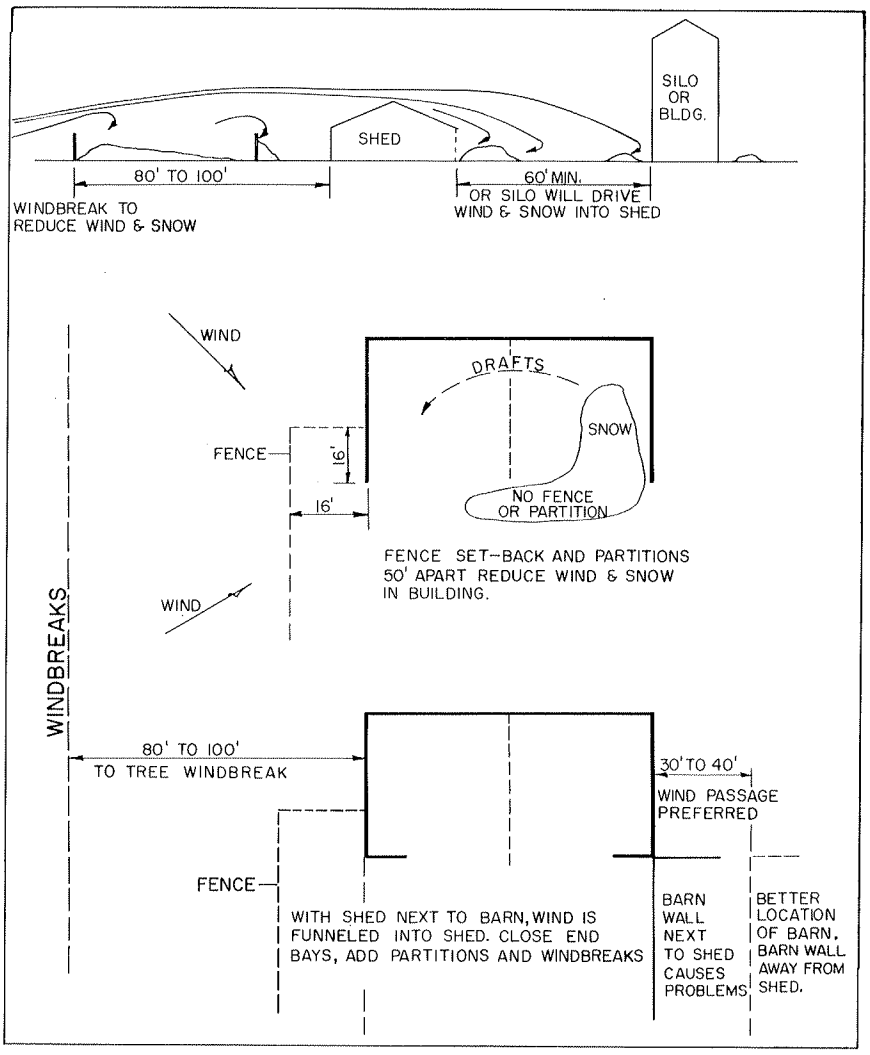

ORIENTATION

Buildings, lots, and other areas to be protected should be located within the area of wind protection but beyond the expected snow catch. Local experience is the best indicator on the distance facilities should be placed from shelterbelts.

Generally, shelterbelts should be 100 to 300 feet away from protected areas. The shorter distance is suitable where snow accumulation is less severe.

SNOW CATCH

The sketches indicate the approximate shape of the snow catch to be expected behind the different types of windbreaks.

The total amount of snow caught, and therefore the extent of the leeward drift, is a factor of how much snow falls, how much snow is caught by other breaks or natural basins, and total seasonal accumulation.

Note that the total amount of snow will be much larger (perhaps 50 times) behind the trees.

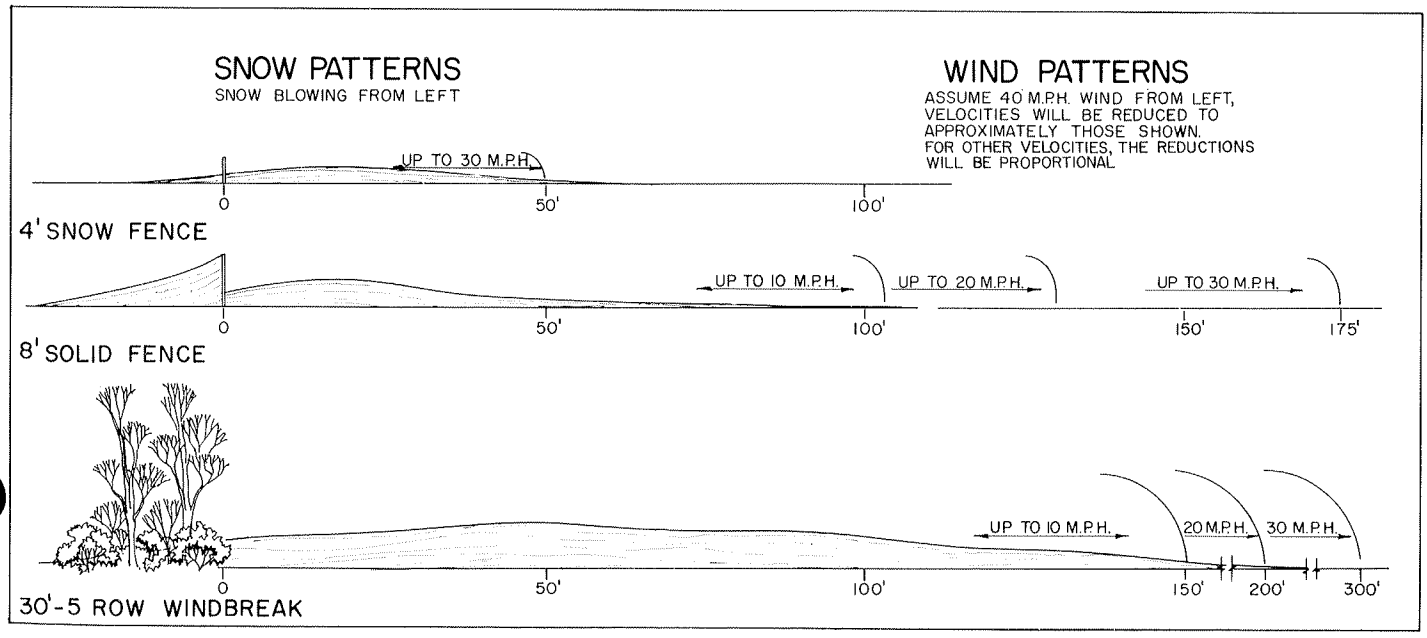

Windbreak Fences

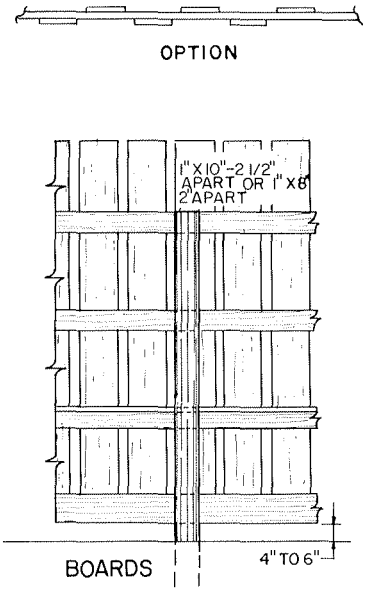

80% SOLID
BETTER FOR SNOW PROTECTION

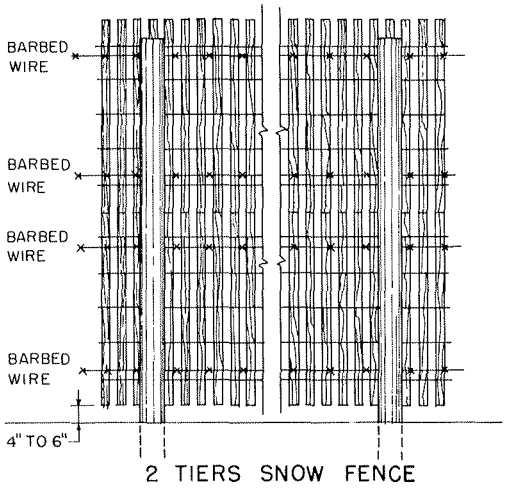

43% SOLID

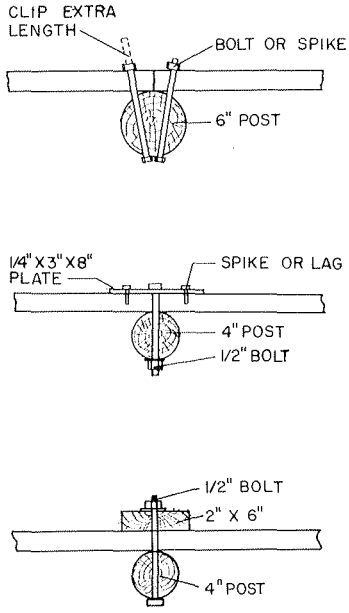

POLES - 6" Top Diam., 10' O.C.

6' Fence	8' Poles	3'-6" Deep	3 Girts
8' "	10' "	3'-6" "	4 "
10' "	12' "	4'-0" "	5 "
12' "	14' "	4'-0" "	6 "
8' Snow Fence	12' "	4'-0" "	

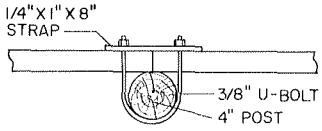

WOOD POST SPLICE
ROUND OR SQUARE POSTS

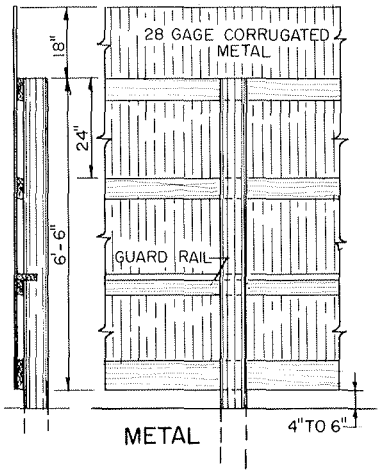

SOLID
BETTER WIND THAN SNOW PROTECTION

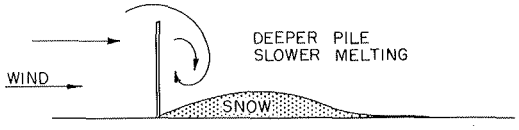

SOLID

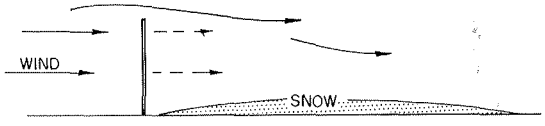

SEMI-SOLID

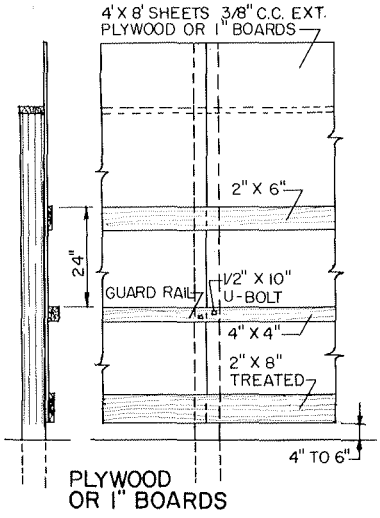

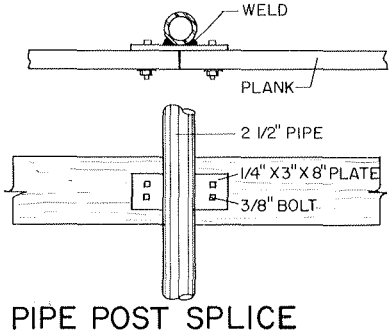

PIPE POST SPLICE

Tilt-Up Concrete Windbreak

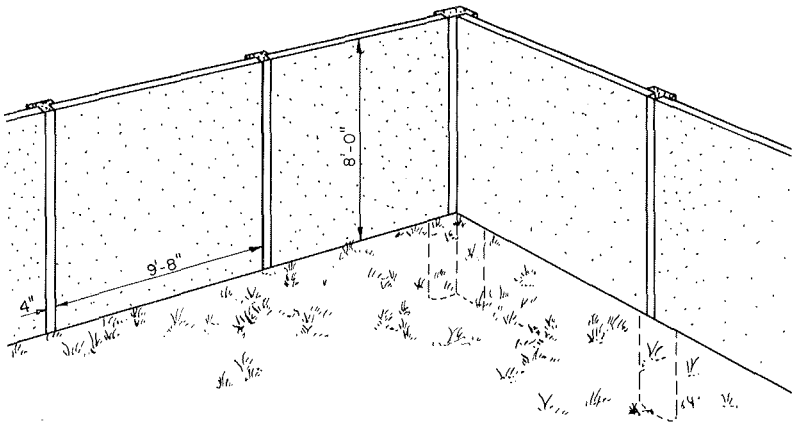

This windbreak is a series of reinforced concrete panels cast on a level sand bed or concrete floor in 2" x 4" forms.
The panels are tilted up and anchored over the foundations.
The horizontal bars in the panels extend $1\frac{1}{2}$" into the columns which are cast in place. "#4 bars" are $\frac{1}{2}$" reinforcing steel.

CONSTRUCTION STEPS

1. Drill holes for footings.
   Cut out earth between holes.
   Set vertical steel.
   Pour footings.
2. Set panel forms on plastic over sand bed or concrete floor.
3. Set steel and pour panels.
4. Prefabricate column forms.
   Tilt panels up with 1-ton tractor front-end loader.
   Grease ends of horizontal panel bars. Cover ends of panels with plastic to prevent bonding with column concrete.
   Install column forms and pour columns.

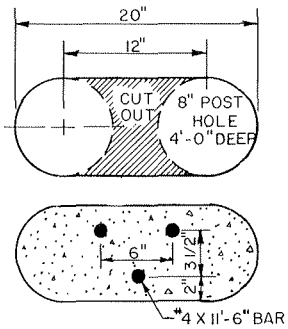

1. FOOTINGS

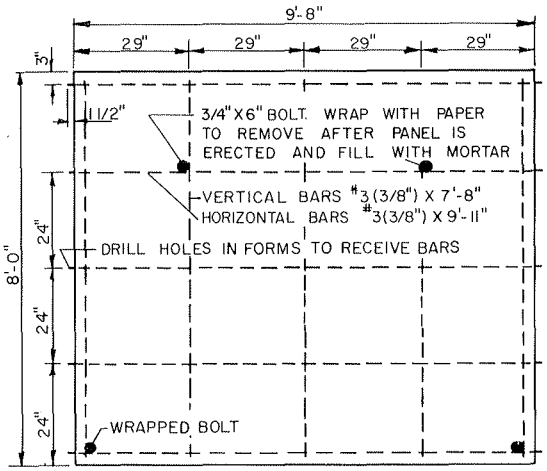

3. PANELS

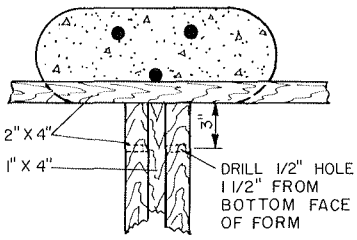

PANEL FORMING DETAIL

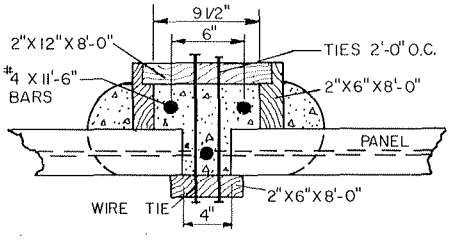

4. COLUMN FORMS

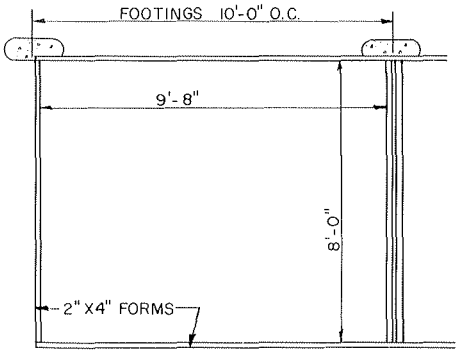

2. FORMS

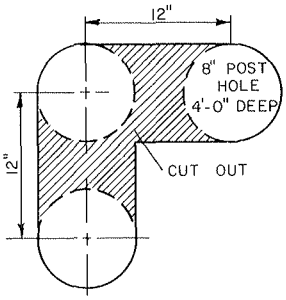

FOOTING

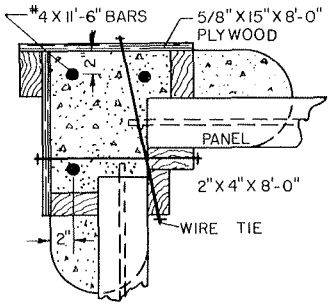

COLUMN

CORNER DETAILS

Fences

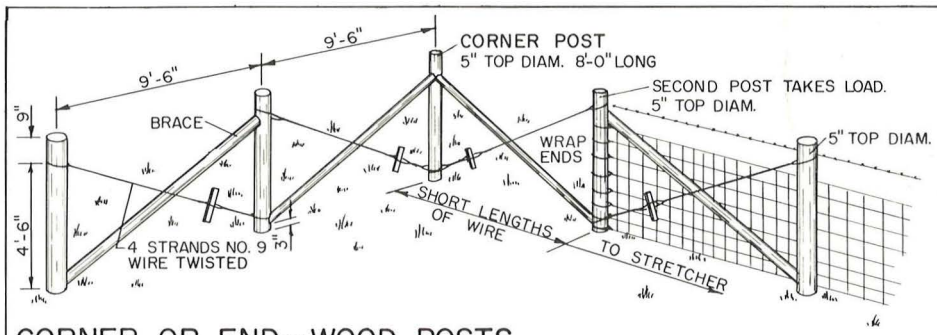

CORNER OR END–WOOD POSTS

CONSTRUCTION STEPS

This extra strong fence corner, or end, is good in soft soils, or where deadman on corner post would otherwise be necessary.

1. Set all fence posts.
2. Install bracing.
3. Fasten wire to second post.
4. Tighten from second post, and complete line fence.
5. Using short lengths of wire, close corner.

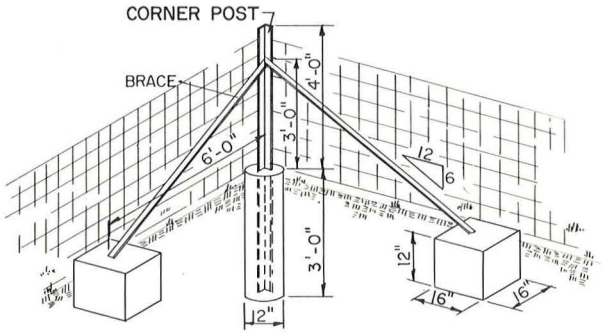

CORNER OR END–STEEL POSTS

POST SIZES

END POST Min. Sizes
- $2\frac{1}{2}$" x $2\frac{1}{2}$" x $\frac{1}{4}$" Angle
- 2" I. D. Standard Pipe
- 5" Top Wood Post - 8' Long

BRACE POST Min. Size (Wood)
- 1st Brace Post - 5" Top, 8' Long
- 2nd " " - 4" Top, 8' Long

BRACE
- For Angle or Pipe Corner Post
  - $1\frac{1}{4}$" I. D. Standard Pipe
  - 2" x 2" x $\frac{1}{4}$" or 3/16" Angle
- For Wood Corner Posts
  - 2" I. D. Standard Pipe
  - 2" x 2" x $\frac{1}{4}$" or 3/16" Angle

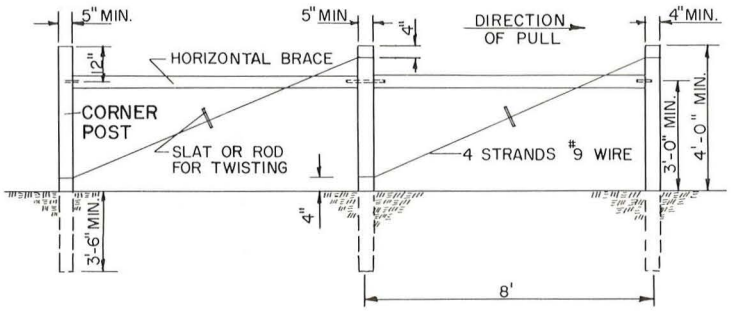

CORNER OR END–WOOD POSTS

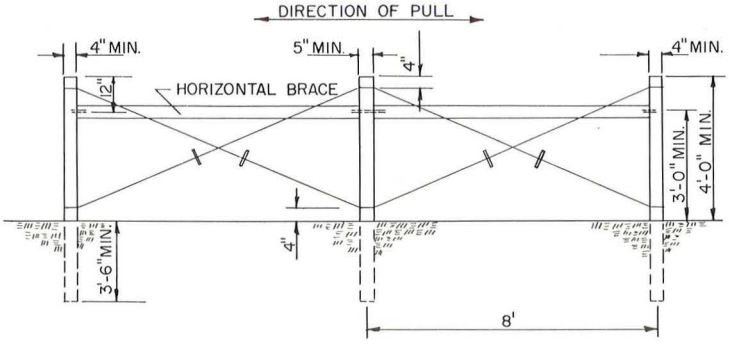

WOOD PULL–POST
FOR MIDDLE OF LONG FENCE, PLACE 40 RODS APART

BRACES

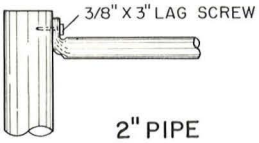

2" PIPE

3" DIAM. POLE

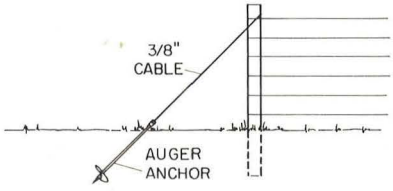

AUGER-ANCHORS CAN BRACE CORNERS & ENDS

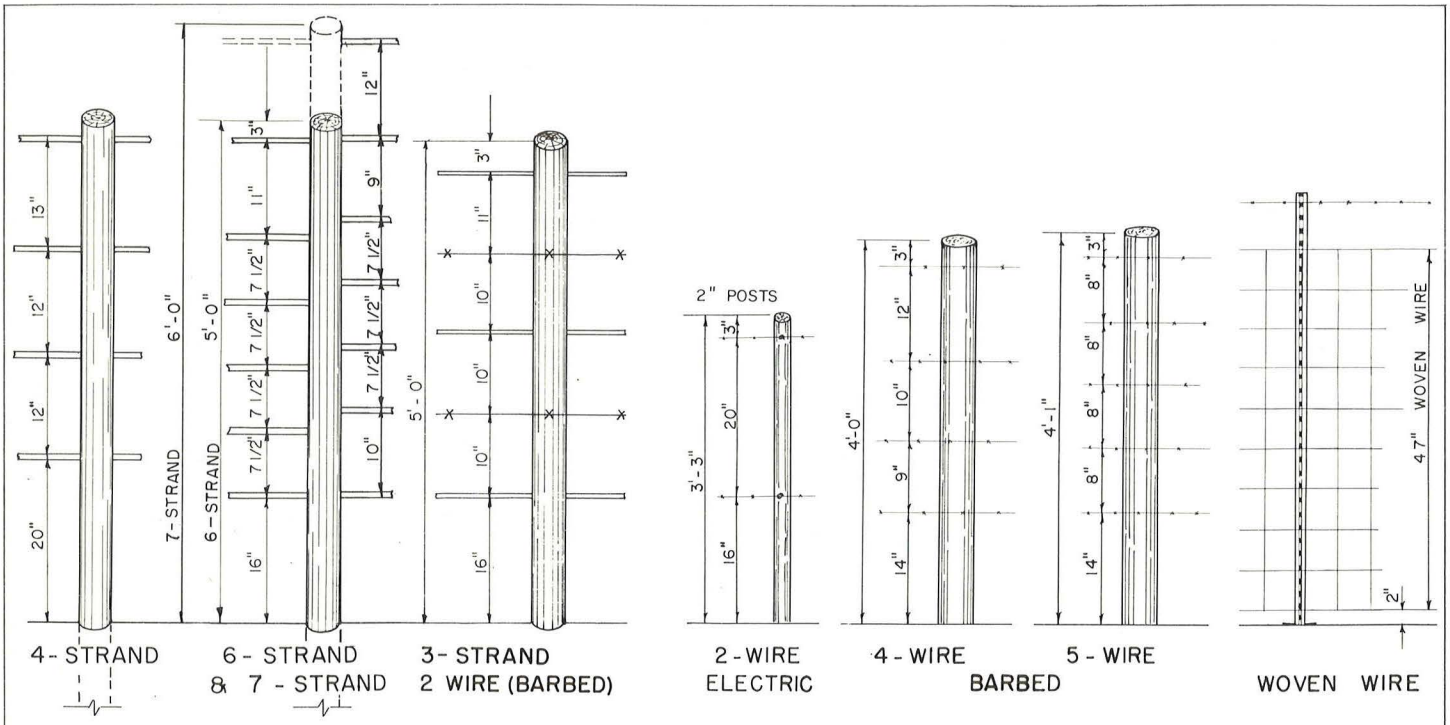

4" TOP POSTS, 8'-0" O.C., SET 2'-6" DEEP

4-strand fence - for lot partitions and boundaries.

6-strand fence - for portions of lot fences which will have to restrain driven cattle - near gates and access to working area.

7-strand fence - for alley to working area, and lines in the working area where there will not be heavy driving - holding pen partitions and boundaries.

Use plank fences in crowding and working areas.

POSTS: STEEL OR 4" TOP WOOD

LINE FENCES

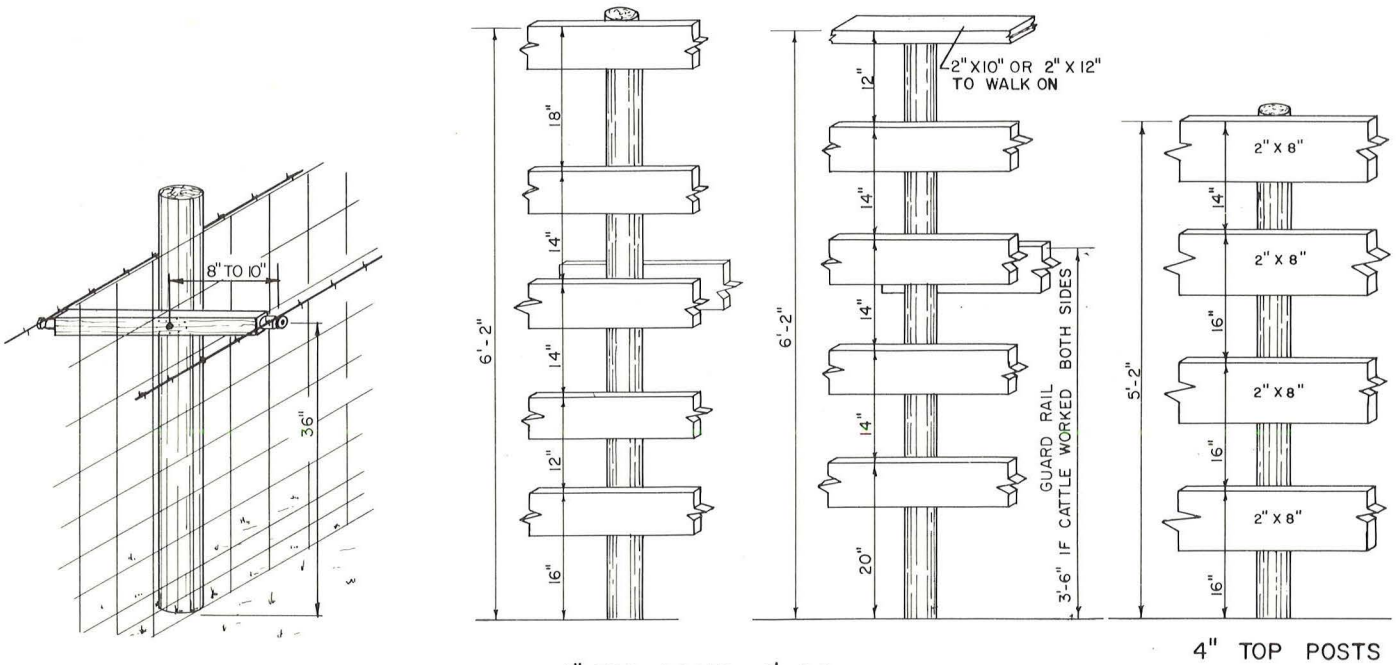

4" TOP POSTS 6' O.C.

2"X6" PLANK FOR LARGER AREAS

2"X8" PLANK FOR SMALL AND CROWDED AREAS

4" TOP POSTS 8' O.C.

PASTURE FENCE

ADD ELECTRIC FENCE FOR BULLS

WORKING FENCES

CORRAL, PADDOCK, YARDS, BULL PENS

FEED LOT LINE FENCES

Gates

BRACING

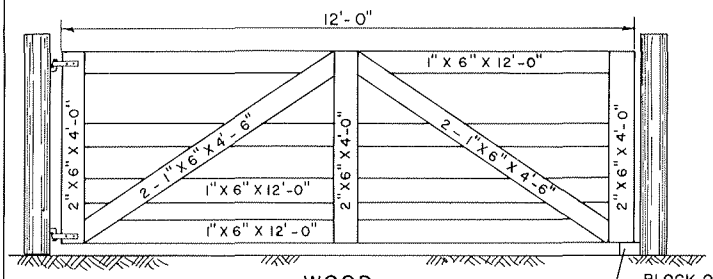

WOOD

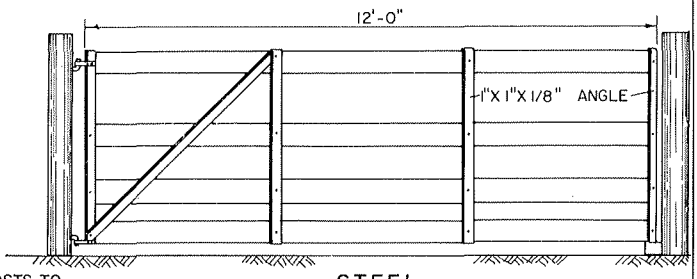

STEEL

RAIL SPACING — SEE TABLE FOR RAIL SIZES

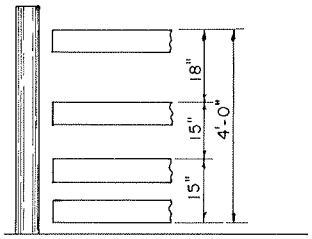

GATE FOR 4' LINE FENCE

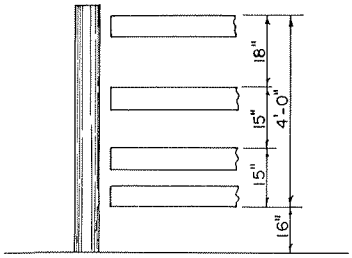

GATE FOR 5' CORRAL FENCE

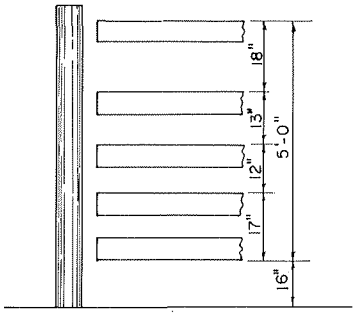

GATE FOR 6' CORRAL FENCE

LEAVE 16" UNDER CORRAL FENCES FOR MAN TO ROLL UNDER IN EMERGENCY

RAIL SIZES

	Gate Height	Gate Width 10'	12'	14'	16'	18'	20'
Line Fences	4'-0"	A	B	B	B	C	C
Feed Lots	4'-0"	A	B	C	C	C	D
Corrals, Yards	5'-0"	B	C	D	D	D	E

A 1" x 4" Rails
B 1" x 6" Rails
C 1" x 6" Rails, Double Rails Top & Bottom
D 2" x 6" Rails
E 2" x 6" Rails, Double Rails Top & Bottom

PLYWOOD GATE

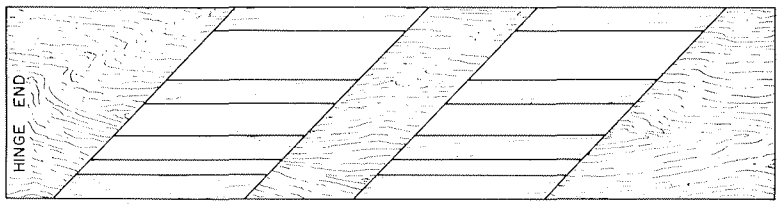

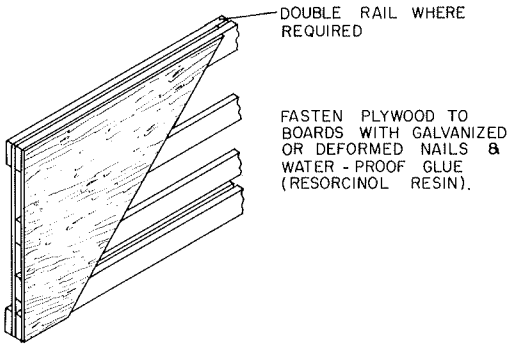

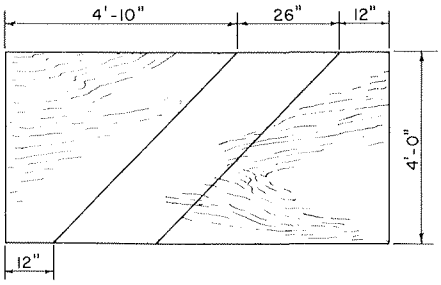

PLYWOOD CUTTING DIAGRAM
3/8" CC EXTERIOR

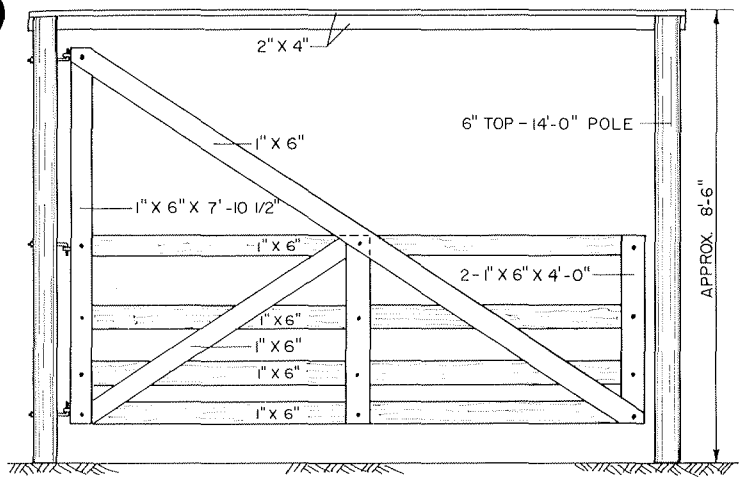

12' TO 16' GATE

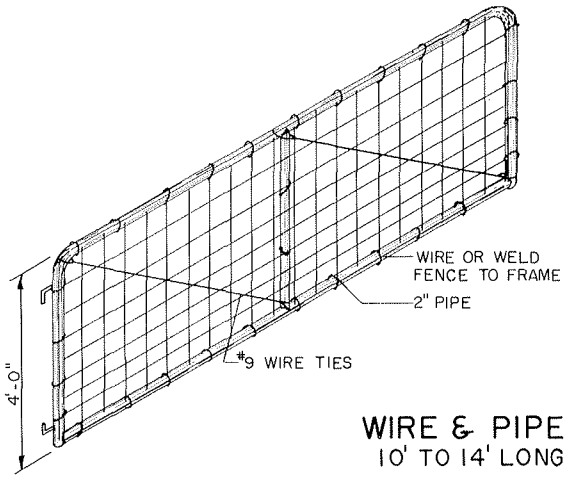

WIRE & PIPE
10' TO 14' LONG

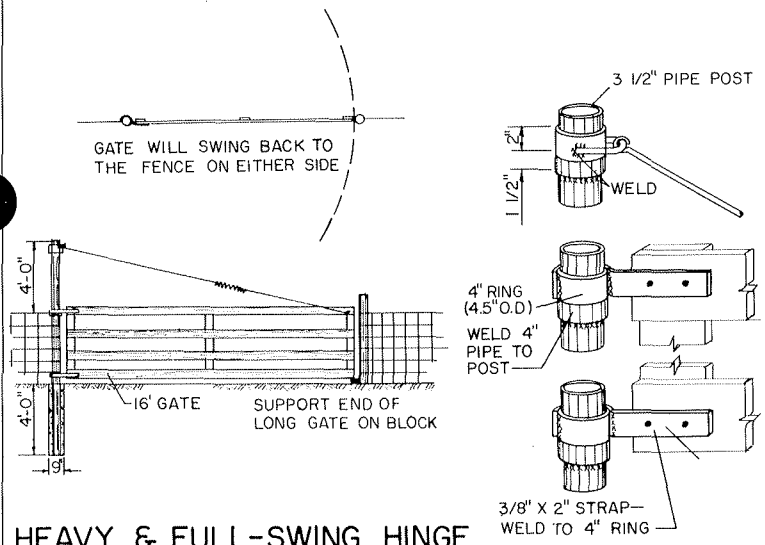

HEAVY & FULL-SWING HINGE

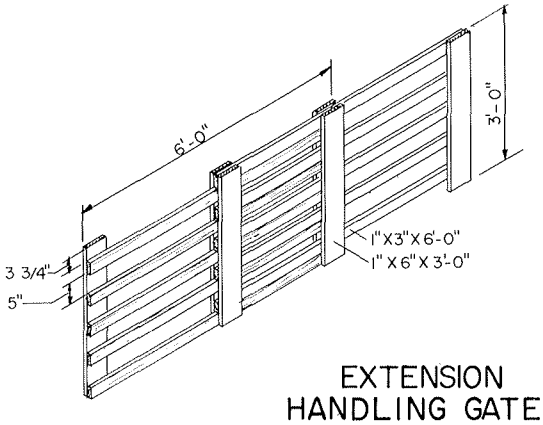

EXTENSION
HANDLING GATE

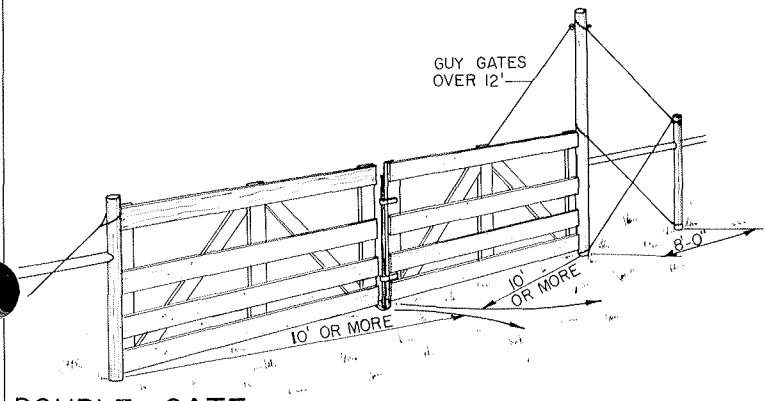

DOUBLE GATE

Hinges and Latches

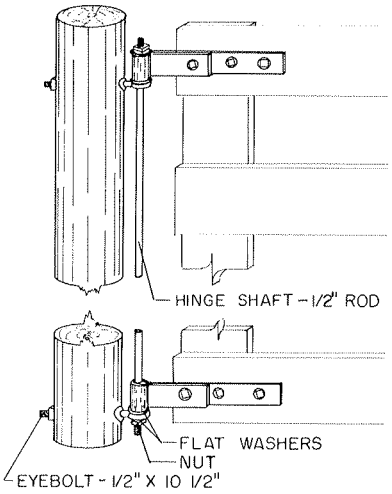

LOT & FIELD HINGE

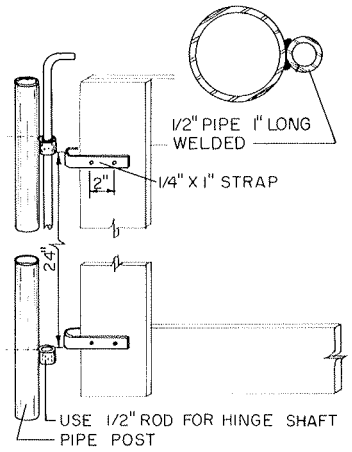

PEN HINGE

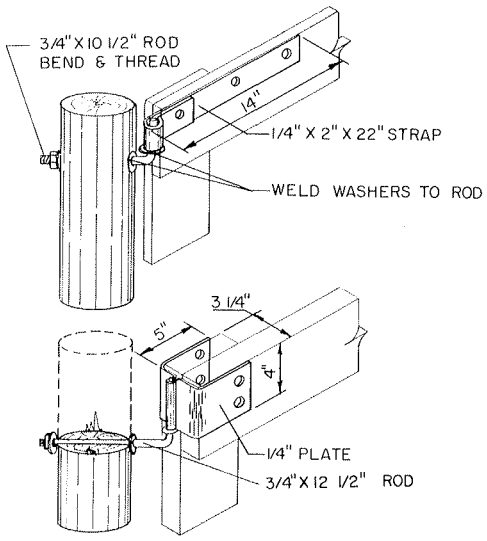

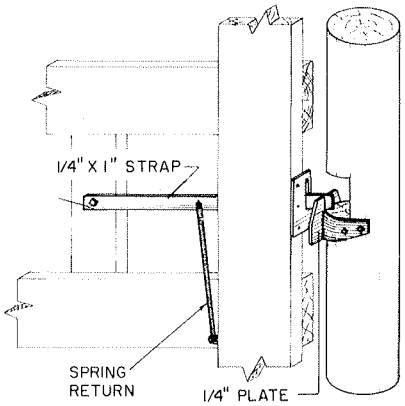

STRAP IRON LATCH
(LOCKS AUTOMATICALLY)

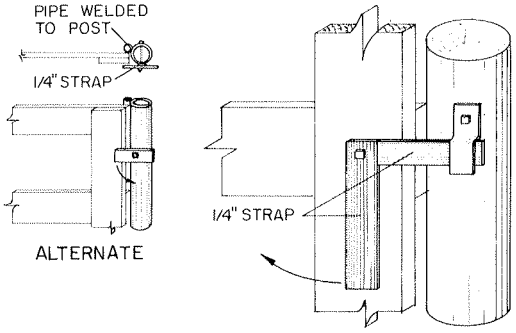

SWIVEL LATCH

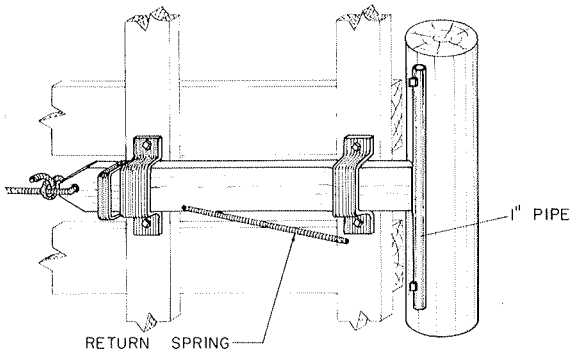

SELF-LOCKING LATCH

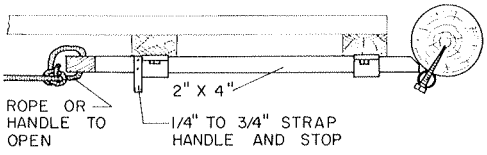

PLAN

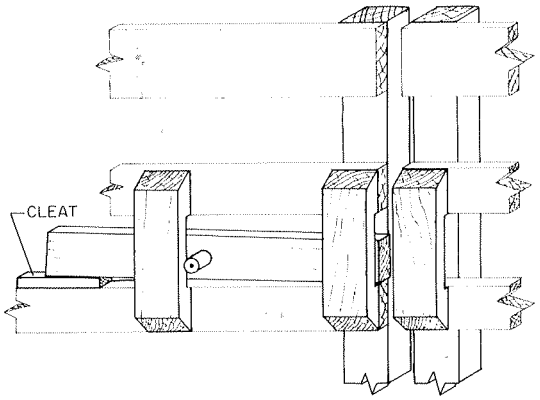

SLIDE STICK LATCH

Stiles and Passes

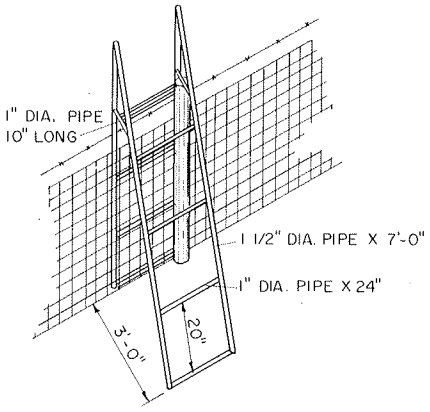

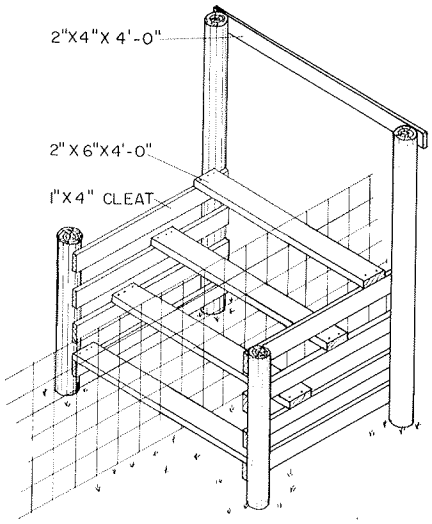

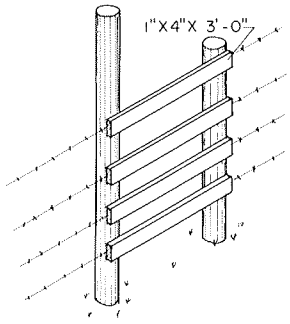

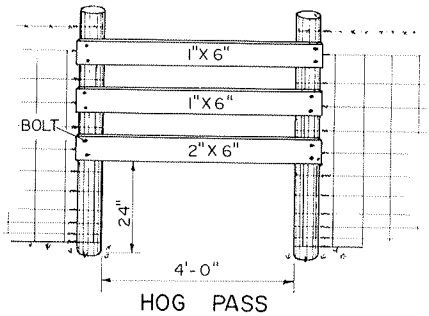

HOG PASS

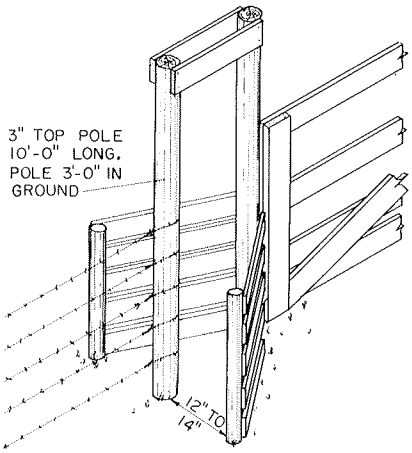

MAN PASS

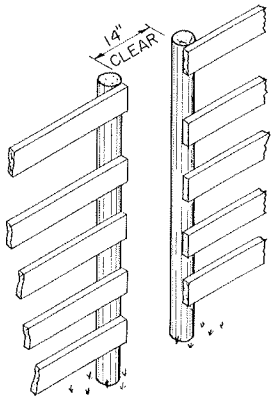

SAFETY PASS
(BULL PEN)

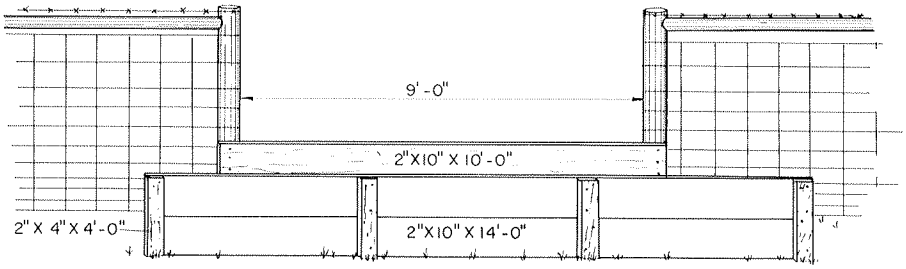

CATTLE PASS - CLOSED TO HOGS

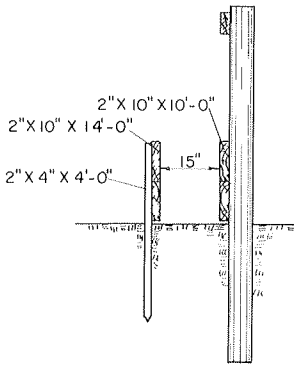

SECTION

Stock Guards

Provide another gate for moving cattle and wide machinery.

CUTTING LIST

ITEM	NO.	DESCRIPTION
A	1	2" x 4" x 12'-0" FRAMING
	2	2" x 4" x 14'-0" FRAMING
B	6	1" x 6" x 12'-0" SLAT
C	2	4" x 6" x 9'-0" GUARD RAIL
D	3	CU. YDS. CONCRETE
E	14	2" x 10'-0" STEEL PIPE, 7" O.C.
F	6	½" x 16" ANCHOR BOLT
G	4	½" x 9'-0" LONG REINFORCING ROD

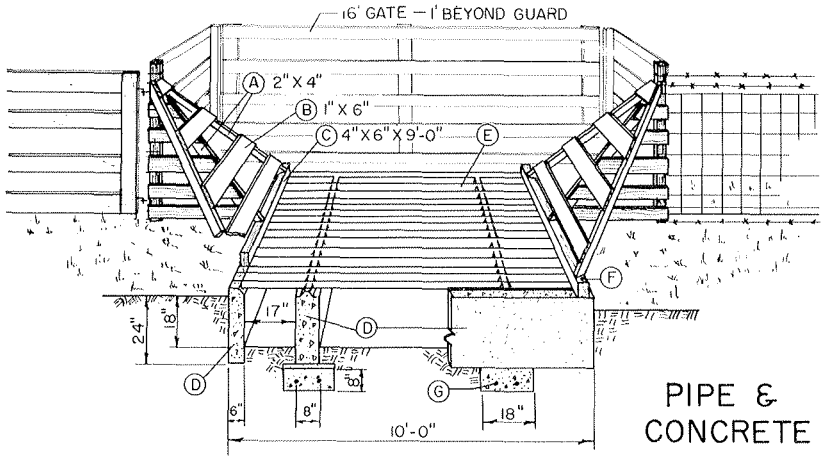

PIPE & CONCRETE

CUTTING LIST

ITEM	NO.	DESCRIPTION
A	4	6" x 8'-0" I-BEAM
B	12	2½" x 10'-0" STEEL PIPE
C	2	2" x 2" x ¼" x 7'-0" ANGLE
D	2	2" x 2" x ¼" x 5'-0" ANGLE
E	2	2" x 2" x ¼" x 3'-0" ANGLE
F	4	2" x 2" x ¼" x 6'-0" ANGLE
G	2	STEEL FENCE POSTS 5'-0"

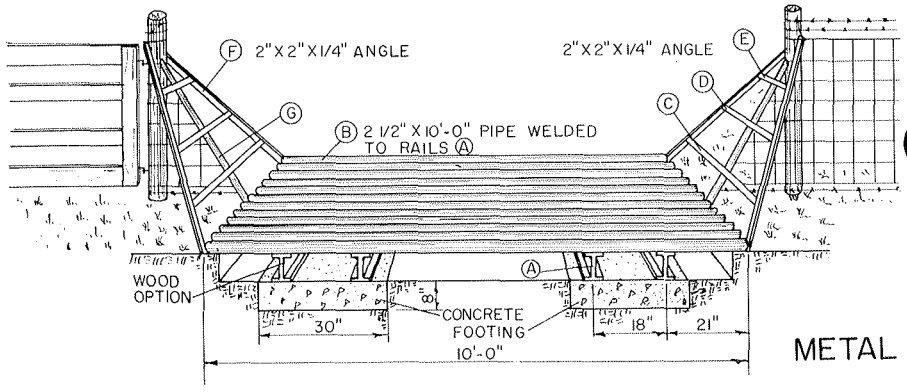

METAL

CUTTING LIST

ITEM	NO.	DESCRIPTION
A	12	2½" x 10'-0" PIPE
B	16	2½" x 7" PIPE
C	4	2½" x 8" PIPE
D	4	2½" x 6'-10" PIPE
E	4	2½" x 17" PIPE
F	2	1" x 4'-0" PIPE
G	1	1" x 2'-7" PIPE
H	1	1" x 4'-8" PIPE

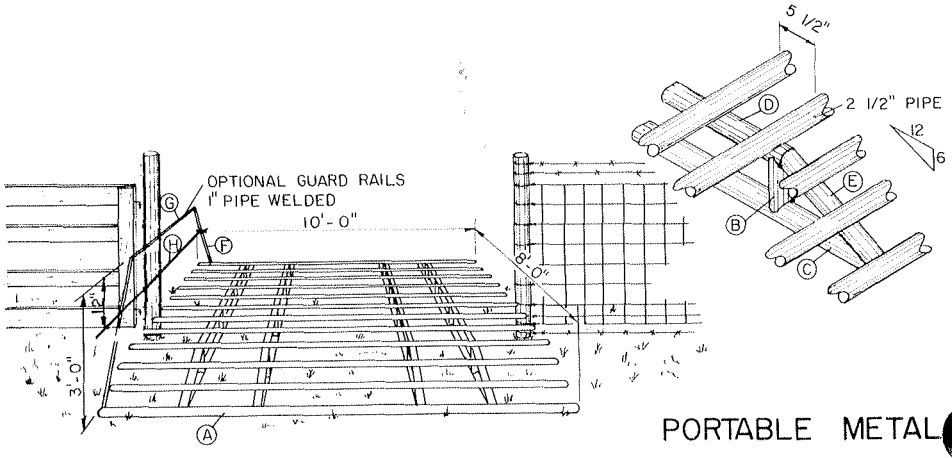

PORTABLE METAL

Stalls & Pens
Warm Barn

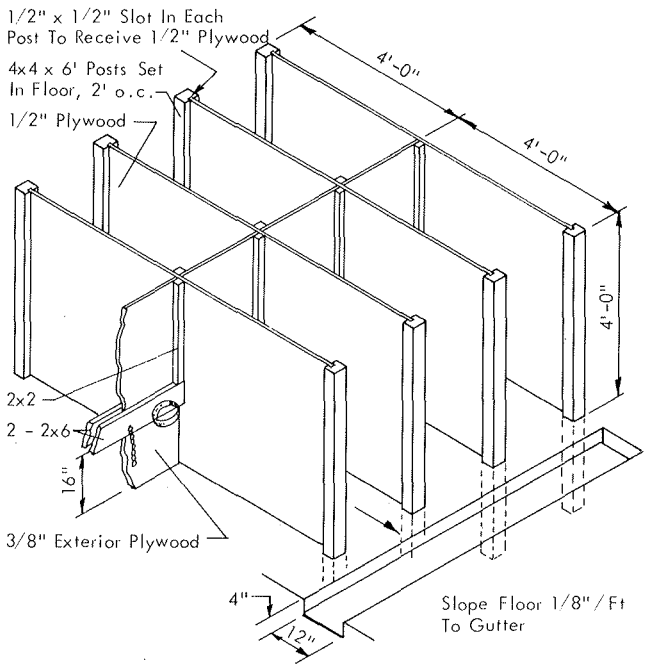

INDIVIDUAL PENS

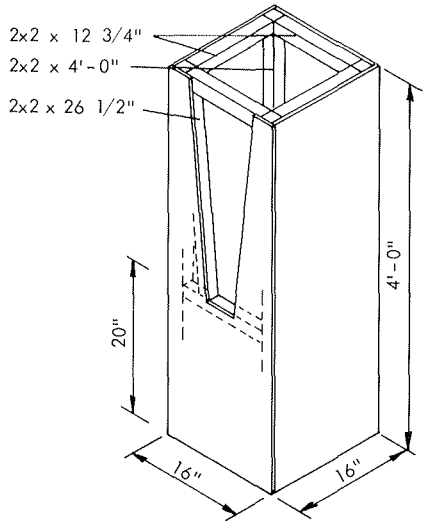

Materials:
2/3 sheet 1/4" plywood or hardboard

2x2 Frame:
4 - 4'-0"
9 - 12 3/4"
2 - 26 1/2"

Glue and nail panels over 2x2 frame. No bottom required. Fasten feeder in corner of pen. Fill to bottom of opening.

HAY FEEDER

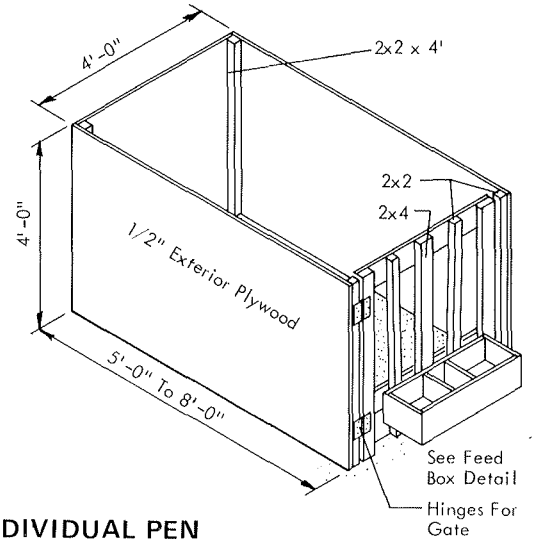

INDIVIDUAL PEN

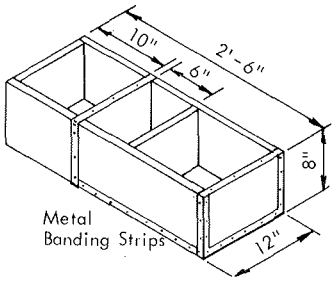

FEED BOX

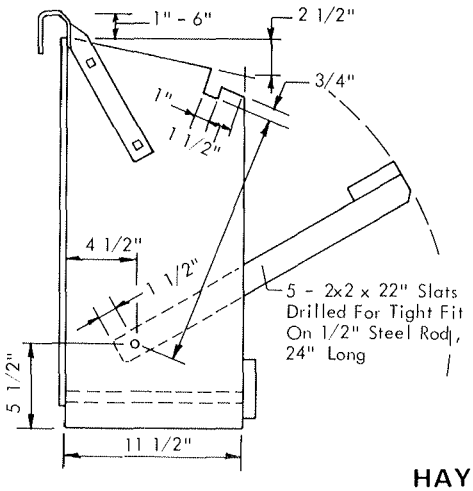

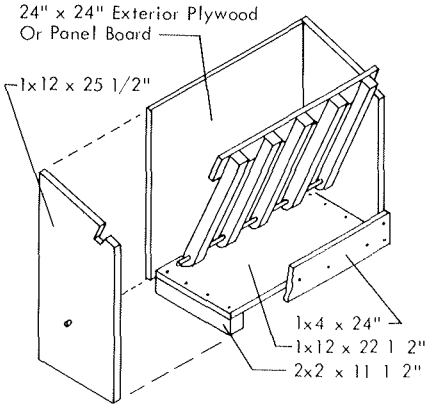

HAY FEEDER

Calf Stall

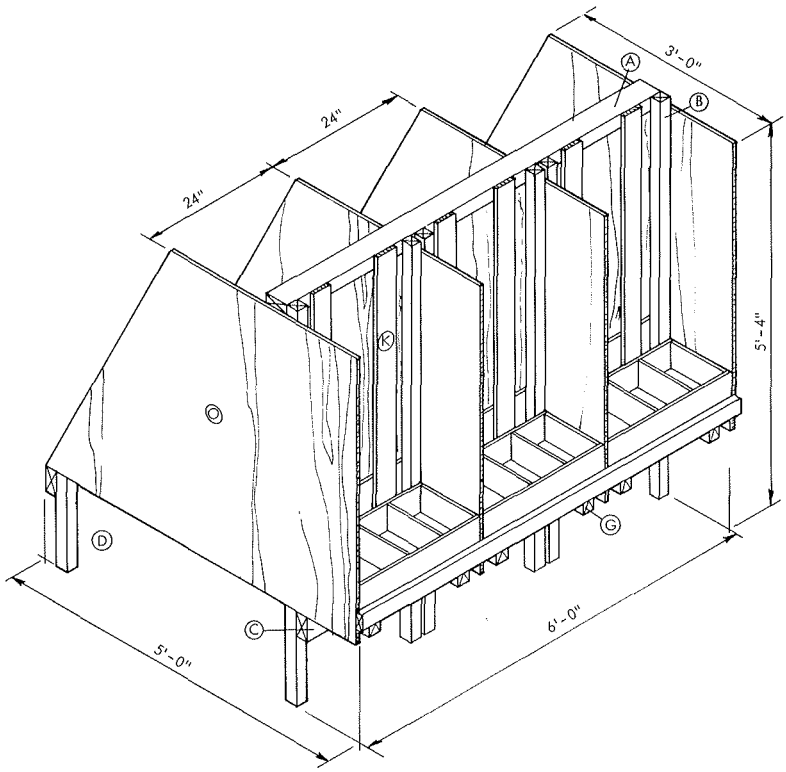

CUTTING LIST

ITEM	NO.	DESCRIPTION
A	1	2x4 x 6'-0"
B	6	2x2 x 5'-4"
C	2	2x4 x 6'-0"
D	6	2x2 x 19 1/2"
E	6	1x6 x 23 1/2"
F	6	2x2 x 4'-0"
G	6	2x4 x 5'-0"
H	12	1x4 x 23"
I	51	1x2 x 23"
J	1	1x2 x 6'-0"
K	6	1x4 x 3'-9"
L	6	1x6 x 23 1/2"
M	12	1x6 x 8 1/2"
N	3	1x10 x 23 1/2"
O	2	1/2" x 4' x 8' Exterior Plywood

Cutting list is for a 3 stall unit.

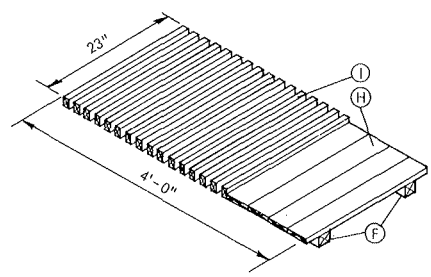

REMOVABLE FLOOR

Floor should be made removable for easy cleaning. 1x2's should be on edge.

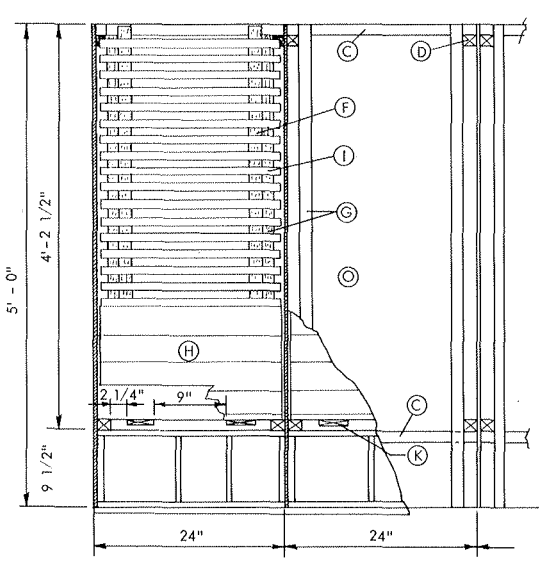

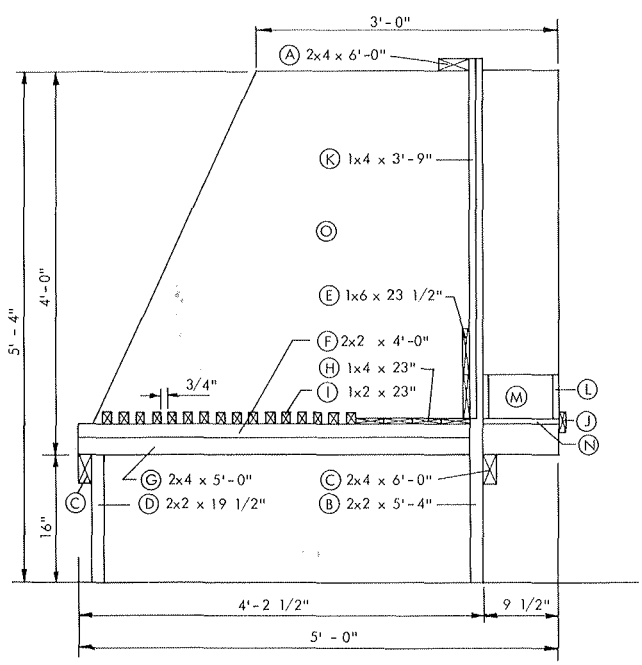

Stalls & Pens
Cold Barn

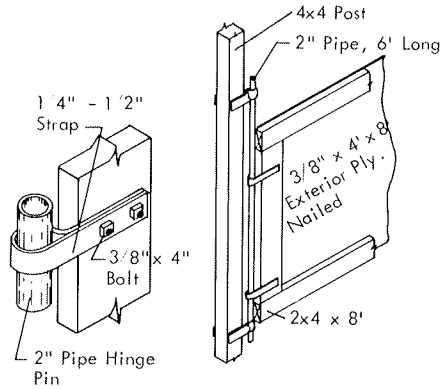

Raise Partition Up As Manure Pack Builds Up

PEN PARTITIONS

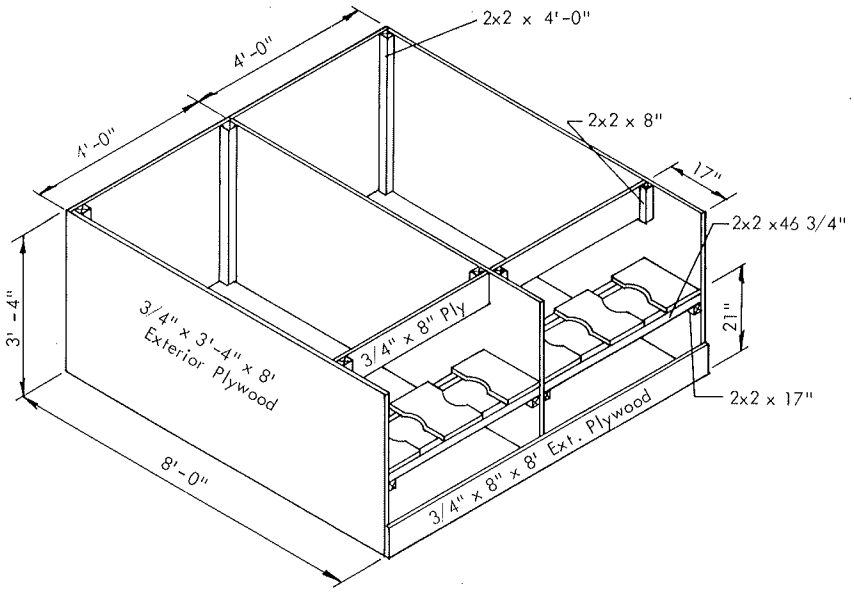

BILL OF MATERIALS

No.	Description
4	3/4" x 4' x 8' Ext. Plywood
3	2x2 x 4'-0"
4	2x2 x 8"
4	2x2 x 46 3/4"
4	2x2 x 17"
6	3/4" x 10" x 17" Ext. Plywood (milk pail holders)

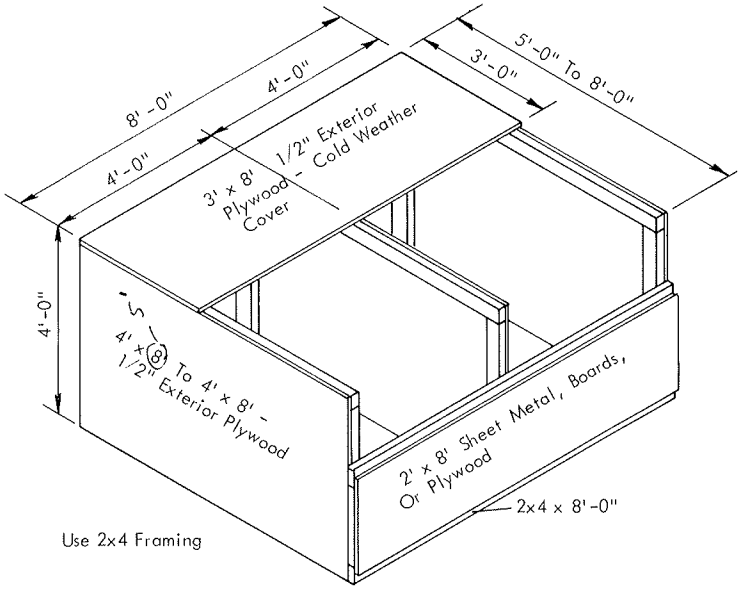

Use 2x4 Framing

BILL OF MATERIALS

No.	Description
1	1/2" x 3' x 8' Ext. Plywood (cover)
3	1/2" x 4' x 8' Or 1/2" x 4' x 5' (partitions)
1	2' x 8' Sheet metal, Boards, or 1/2" Plywood (front)
1	1/2" x 4' x 8' Ext. Plywood (back)
6	2x4 x 44 1/2"
3	2x4 x 5' or 8'
2	2x4 x 8' (front rails)

Calf Pens

Pasture Or Dry Lot

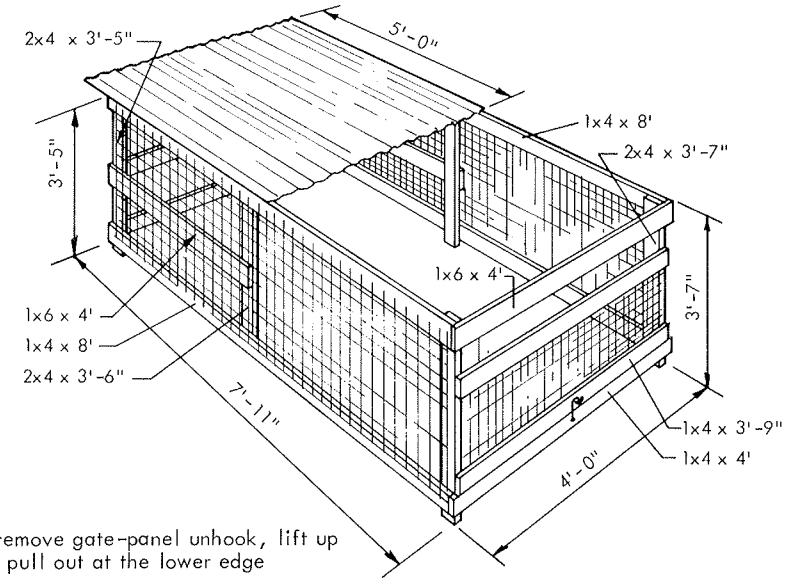

To remove gate-panel unhook, lift up and pull out at the lower edge

CUTTING LIST

No.	Description
3	2x4 x 7'-0"
1	2x2 x 8'-0"
2	2x6 x 8'-0"
7	1x4 x 8'-0"
1	1x4 x 6'-0"
24 ft	Wire Mesh
1	4' x 5' Sheet Metal

All lumber should be thoroughly soaked in a non-toxic preservative, such as pentachlorophenol or copper napthenate, after cutting. Assemble with rust-proof screws, nails and staples.

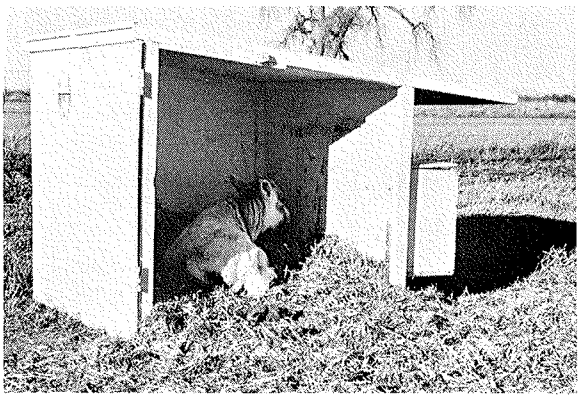

Courtesy of Colorado State University

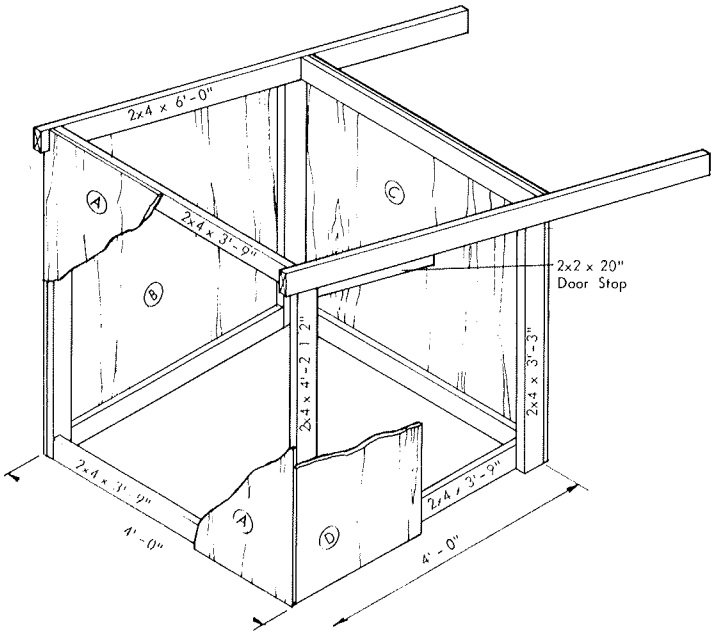

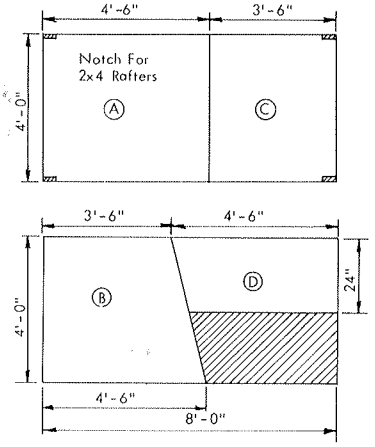

3/4" Exterior Plywood CUTTING DIAGRAM

Bull Pens

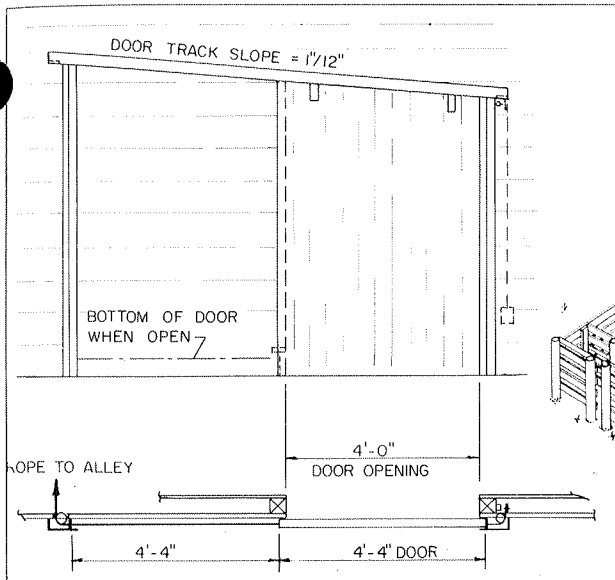

SELF-CLOSING DOOR

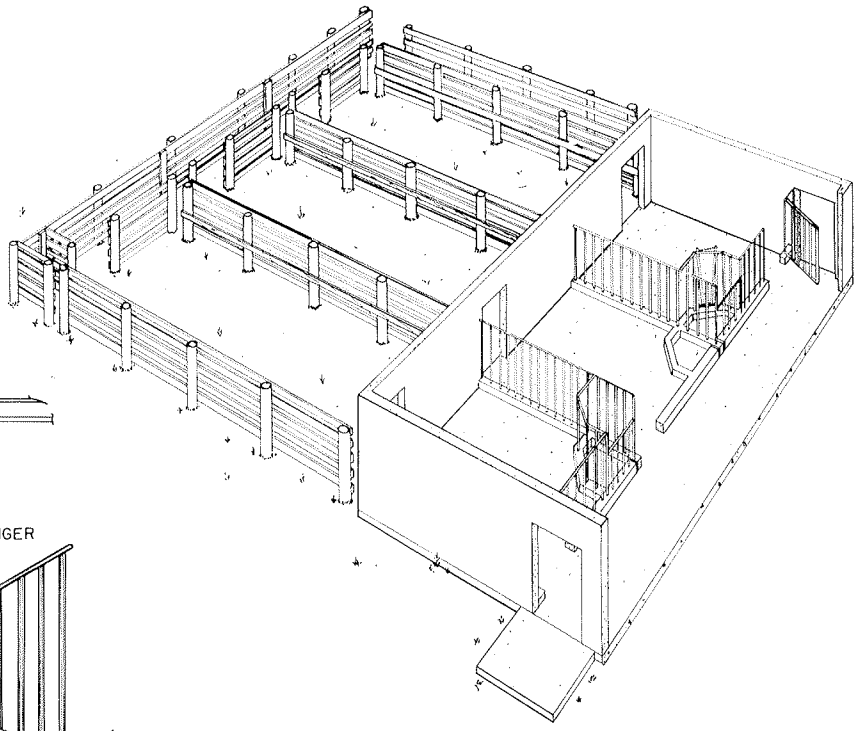

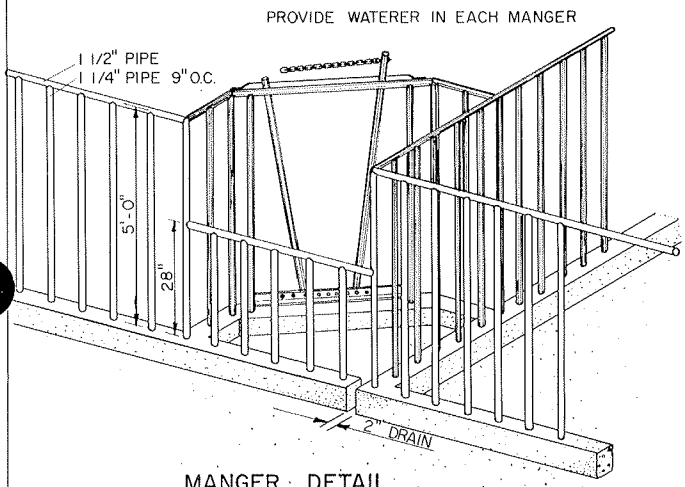

MANGER DETAIL

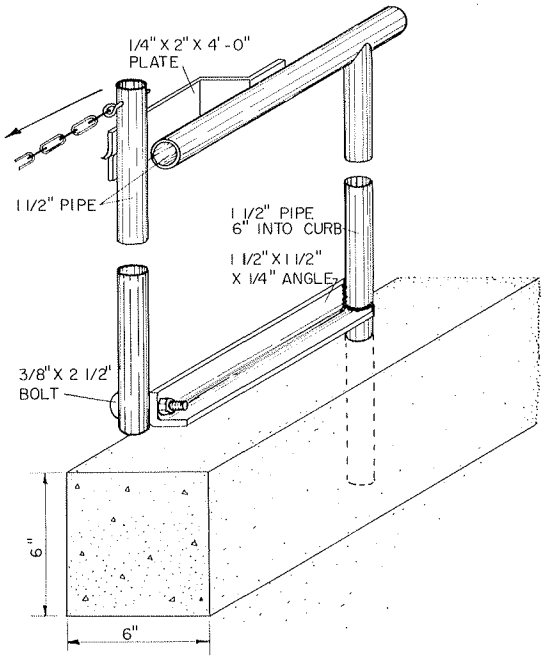

STANCHION DETAIL

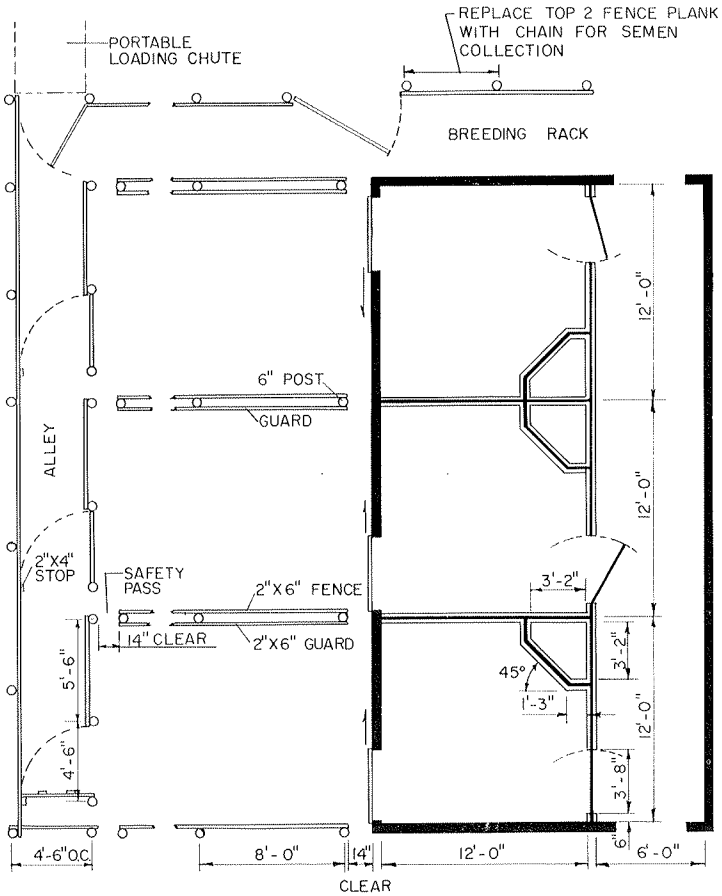

FLOOR PLAN

Bull Pen

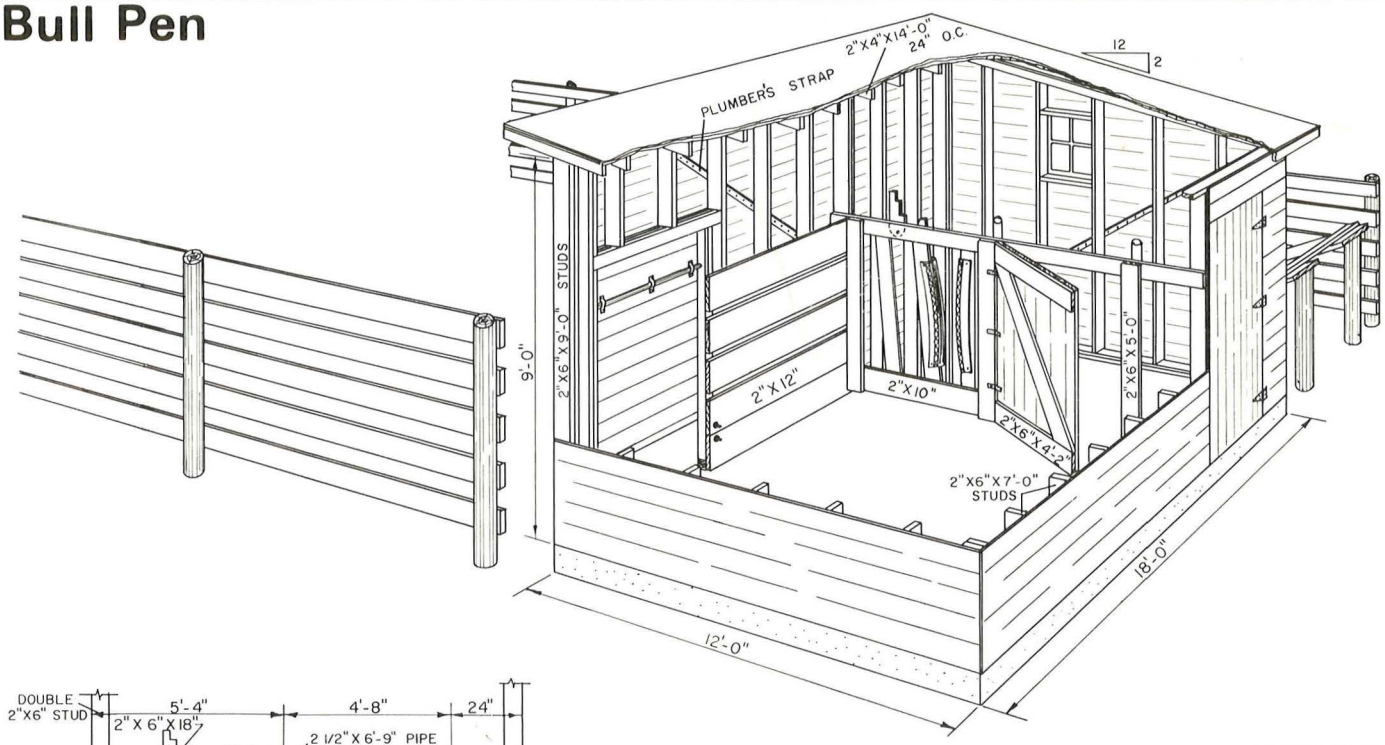

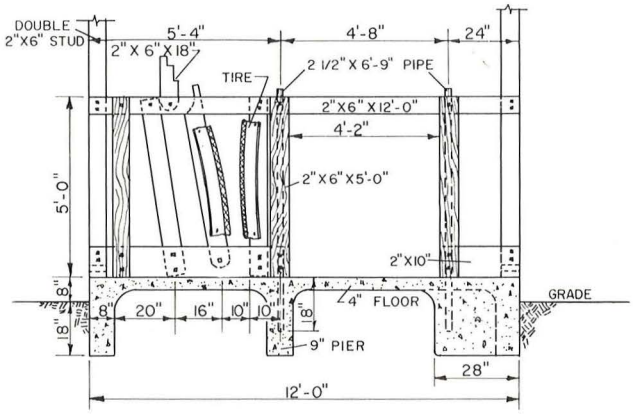

PARTITION DETAIL

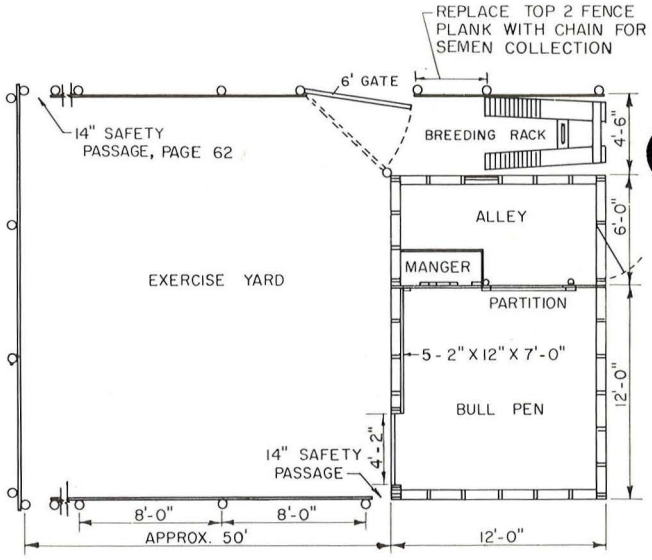

BILL OF MATERIALS

No.	Description
Floor	
6 Cu. Yd.	Concrete
Roof	
12	2" x 4" x 14'-0"
38	1" x 10" x 10'-0" Shiplap
280 Sq. Ft.	Roofing
Walls	
6	2" x 6" x 14'-0" Stud
13	2" x 6" x 18'-0" Stud
2	2" x 6" x 14'-0" Header
4	2" x 6" x 18'-0" Plat
4	2" x 6" x 12'-0" Plat
2	2" x 6" x 18'-0" Sill
2	2" x 6" x 14'-0" Sill
4	2" x 6" x 12'-0" Sill
1200 Ln. Ft.	1' x 6' Siding
60 Ft.	Plumber's Strap
5	2" x 12" x 7'-0"
Partition	
1	2" x 6" x 12'-0"
19	2" x 6" x 5'-0"
2	2½" x 6'-9" Pipe
1	2" x 10" x 8'-6"
1	2" x 10" x 4'-6"
Swinging Door	
10	1" x 6" x 12'-0" Flooring
1	2" x 4" x 5'-0"
1	1" x 4'-6" Pipe

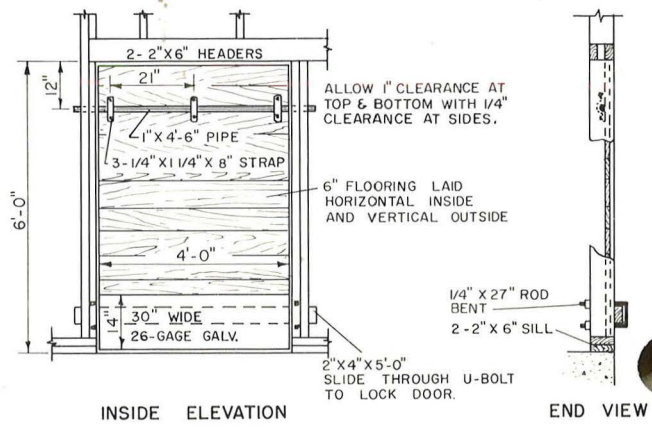

INSIDE ELEVATION END VIEW

SWINGING DOOR

Breeding Rack

CUTTING LIST

Item	No.	Description
A	2	$1\frac{1}{2}$" Pipe, 3'-4" Long
B	1	$1\frac{1}{2}$" x $1\frac{1}{2}$" x $\frac{3}{8}$" x 18" Angle
C	2	2" x 6" x 26"
D	1	Eye Bolt
E	4	$\frac{1}{4}$" x $6\frac{1}{2}$" Bolt
F	2	$\frac{1}{4}$" x $2\frac{1}{2}$" Bolt
G	2	6" Post, 4'-7" Long
H	2	6" Post, 5'-10" Long
I	2	6" Post, 6'-7" Long
J	4	2" x 4" x 6'-10"
K	2	2" x 4" x 6" Block
L	2	1" x 2" x 4'-7"
M	2	1" x 3" x 3'-8"
N	2	2" x 12" x 7'-0"
O	20	1" x 2" x $11\frac{1}{2}$"
P	1	2" x 4" x 3'-6"
Q	4	2" x 2" x 3/16" x 34" Angle
R	6	$\frac{1}{2}$" x 10" Bolt
S	8	$\frac{1}{2}$" x $7\frac{1}{2}$" Bolt
T	4	$\frac{1}{2}$" x $2\frac{1}{2}$" Bolt

All lumber pressure treated.

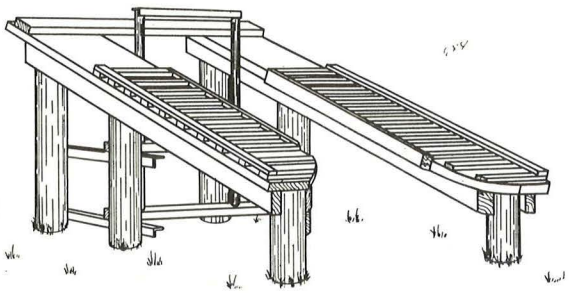

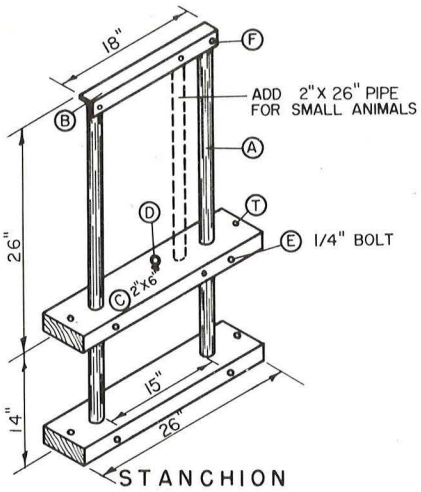

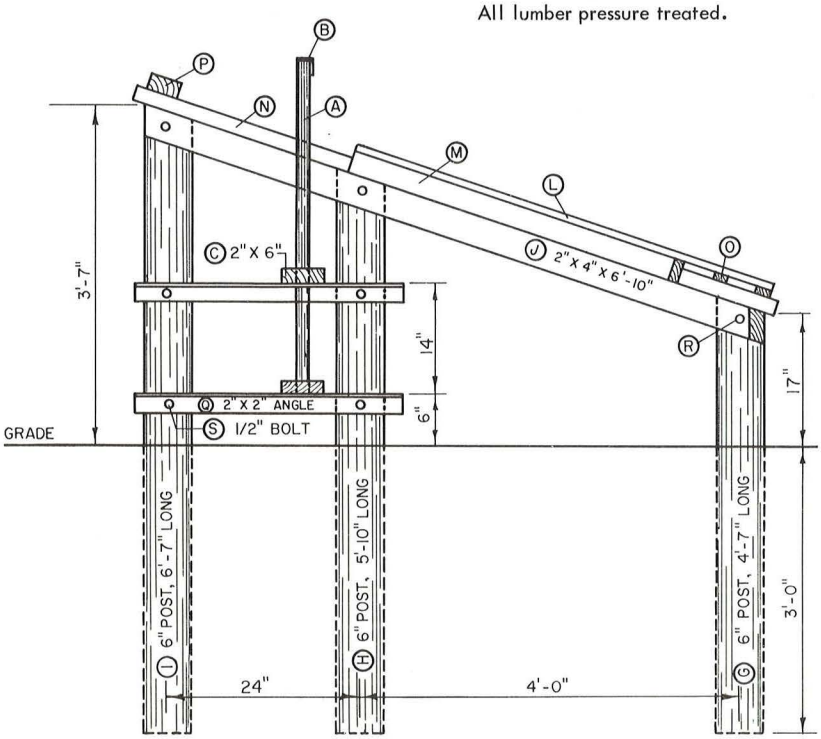

PORTABLE OPTION

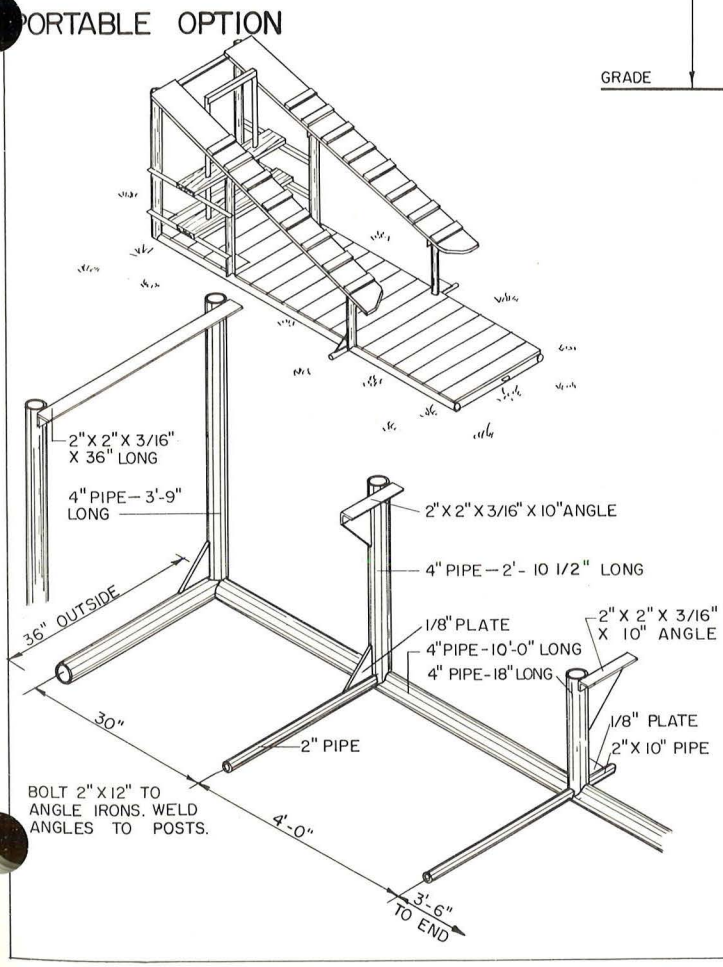

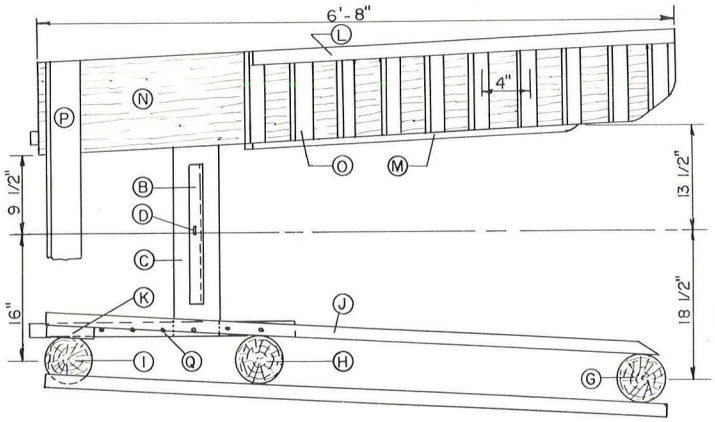

Corrals

MINIMUM WORKING CORRAL

Holding Pen, 20 sq ft per mature animal.
Crowding Pen, 150 sq ft or one truckload.
Working Chute, 18 to 30 sq ft long, 26" max. bottom width headgate.
Loading Chute, 30" to 42" wide.

USEFUL FEATURES

Additional holding pens.
Blocking Gates—prevent crowding at scale, cutting gates, spray area, or squeeze.
Cutting Gates—separate animals by weight, age, health, etc.
Squeeze—restricts animal more than headgate, for veterinary services.
Scale—either large platform for truck or stock, or portable, for use in working chute.
Spray Pen—8'x30' for one carload; crowding pen may be used or dipping vat.
Sorting Alley—10' to 12' wide.
Provide water in lots for holding cattle overnight. Provide for feed and water in one holding pen to be used as bull pen.

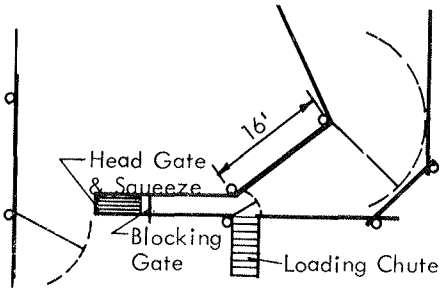

FUNNEL CROWING PEN

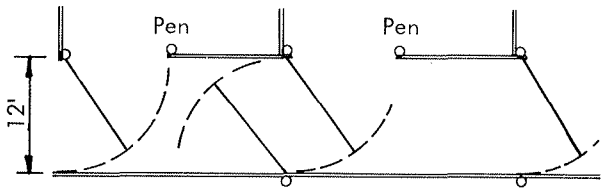

SORTING ALLEY
With Cross Gates, Can Be Used For Spraying & Holding

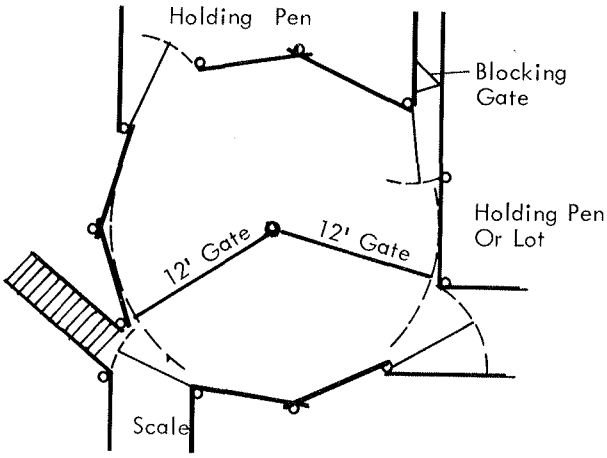

CIRCULAR
Positive Crowding, More Difficult To Construct, Less Useful For Other Purposes.

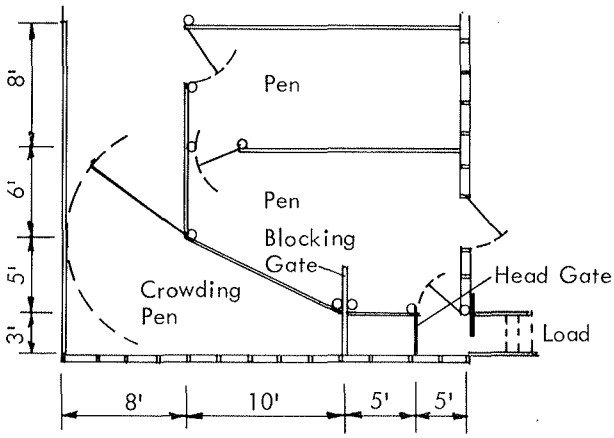

IN BARN CORNER

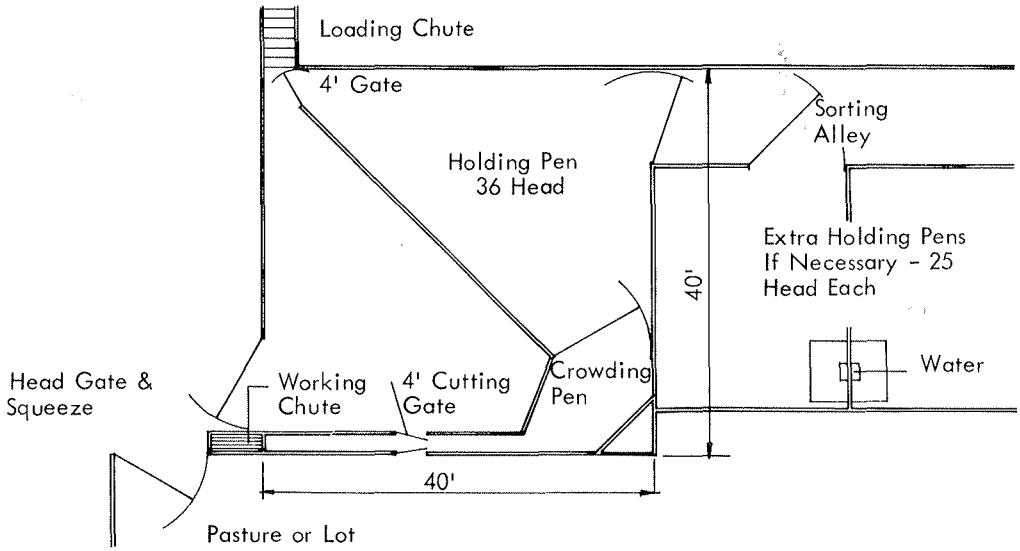

Headgates

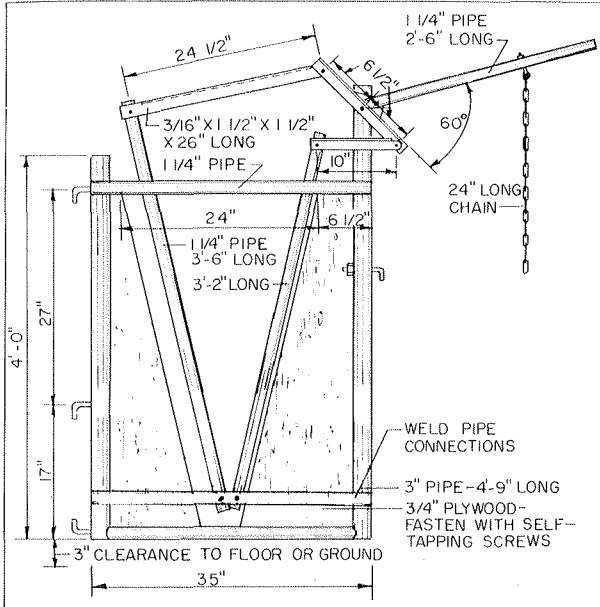

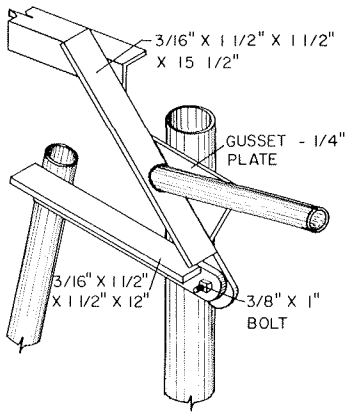

LEVER DETAIL

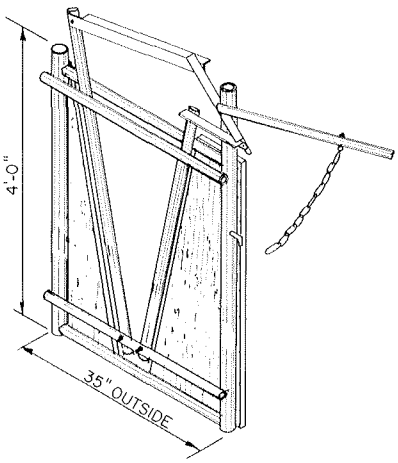

METAL — SWING OPEN

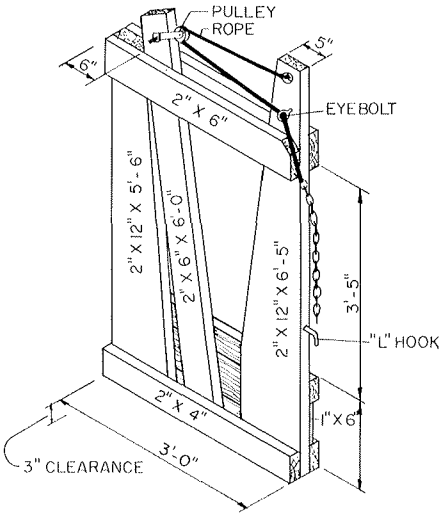

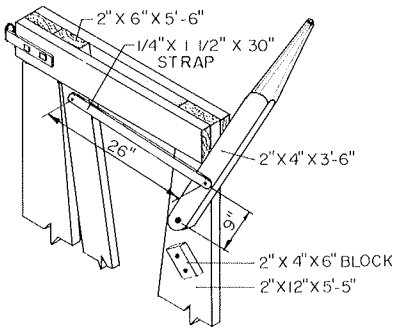

OPTION

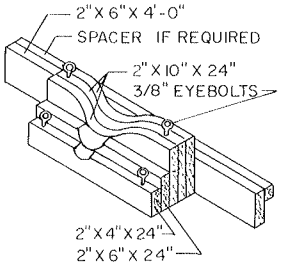

MAY BE BOLTED AT BOTTOM
OF NECK "V" ON ANY HEADGATE

CHIN BLOCK
USE ROUGH OAK FOR FRAMING

WOOD — SWING OPEN

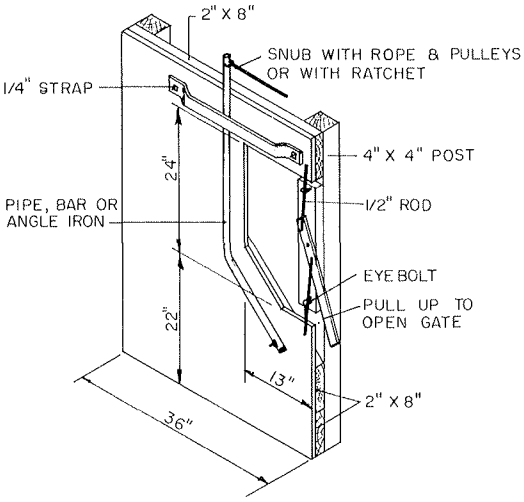

WOOD — WALK TROUGH

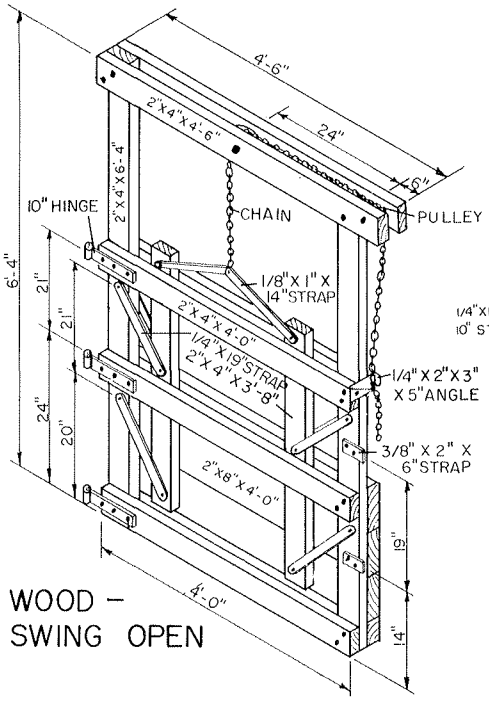

WOOD —
SWING OPEN

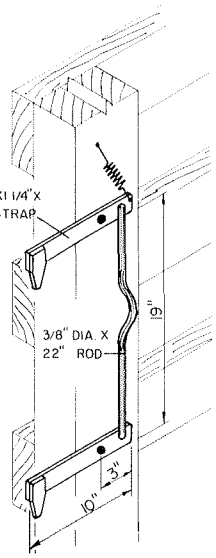

LATCH DETAIL

Loading Chutes

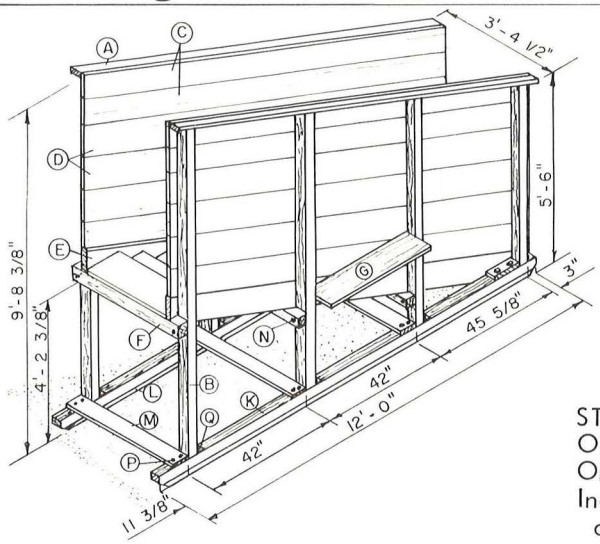

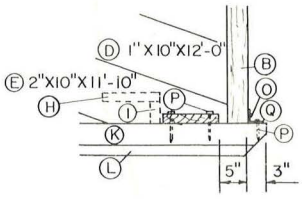

STATIONARY OPTION
Omit Skids K & L
Omit Hardware O & P & Q
Increase length of B 3'-6"
and set in ground.

CUTTING LIST

Item	No.	Description
A	2	2" x 4" x 12'-0"
B	2	4" x 4" x 5'-0"
	2	4" x 4" x 6'-3"
	2	4" x 4" x 7'-6"
	2	4" x 4" x 8'-8"
C	4	1" x 6" x 12'-2"
D	8	1" x 10" x 12'-4"
E	2	2" x 10" x 12'-1"
F	3	4" x 4" x 3'-5"
G	2	2" x 12" x 3'-2 3/8"
H	12	2" x 10" x 30" & 1 3'-5" Long
I	12	2" x 4" x 30"
J	2	1" x 8" x 11'-0"
K	2	4" x 4" x 12'-0"
L	2	2" x 4" x 12'-0"
M	3	2" x 6" x 3'-5"
N	6	1/2" x 9" Bolt
O	8	1/2" x 4 1/2" Bolt
P	32	3/8" x 4" Lag Screw
Q	8	2 1/2" x 2 1/2" x 1/4" x 3" Angle

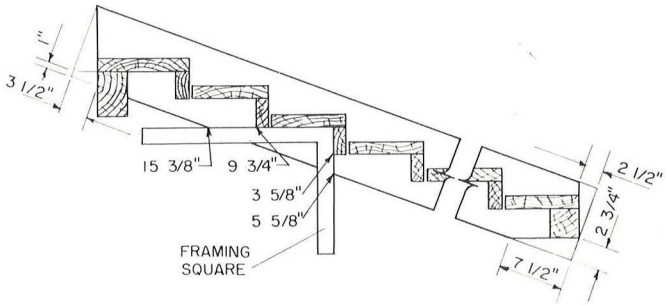

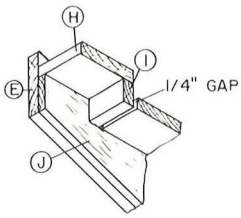

TRUCK BED HEIGHTS
Delivery - 25"-31"
Van-Type - 38"-44"
Trailer - 44"-50"

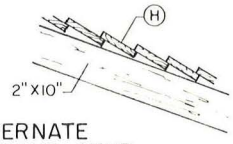

ALTERNATE
SHINGLE STEP

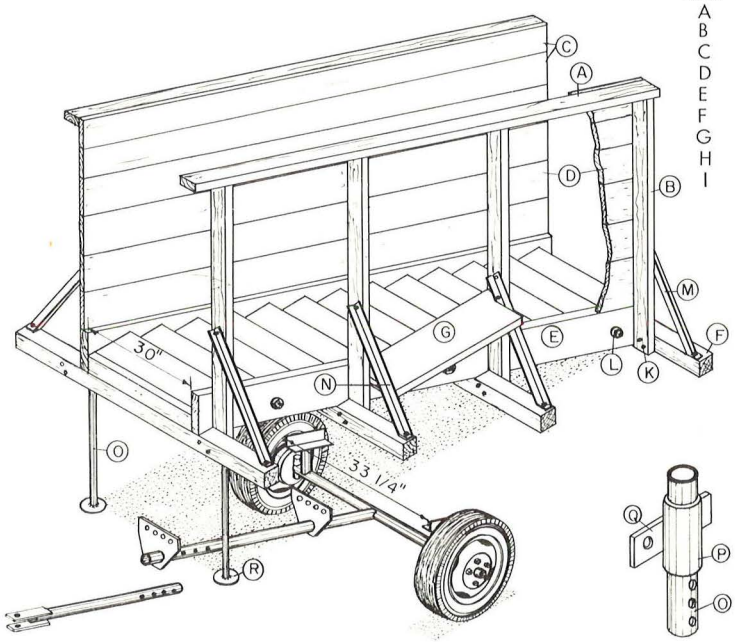

CUTTING LIST

Item	No.	Description	Item	No.	Description
A	2	2" x 4" x 11'-8"	J	2	1" x 8" x 11'-0"
B	8	2" x 4" x 5'-6"	K	16	3/8" x 6" Bolt
C	4	1" x 8" x 11'-8"	L	3	3/8" x 35" Tie Rod
D	8	1" x 10" x 11'-8"	M	8	2" x 2" x 3/16" x 3'-1" Angle
E	2	2" x 10" x 11'-8"	N	4	1/2" x 1/2" x 3/16" x 11" Angle
F	4	4" x 4" x 6'-0"	O	2	1 1/2" Dia. x 5'-10" Pipe
G	2	2" x 12" x 3'-4"	P	4	2" Dia. x 4" Pipe
H	13	2" x 10" x 30"	Q	4	1/4" x 2" x 4" Steel Plate
I	13	2" x 4" x 30"	R	2	1/4" x 6" Dia. Steel Plate

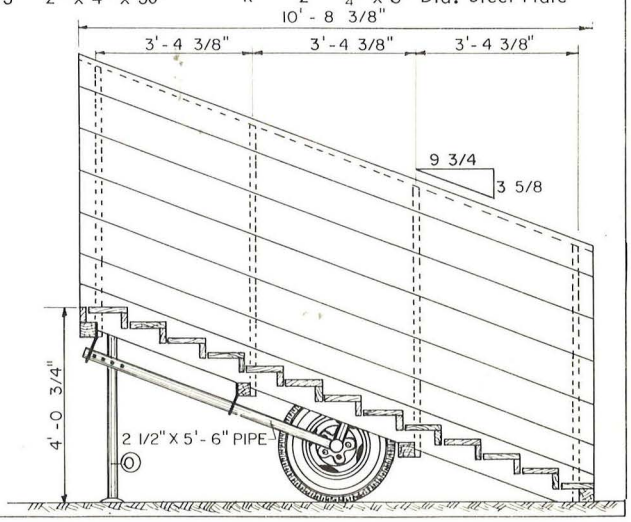

Sun Shades

Space allowance: 20 to 25 sq. ft. per head.
Paint top side of roof white and underside of roof black.
Orient a row of shades north and south so sun will shine under shade early morning and late evening.

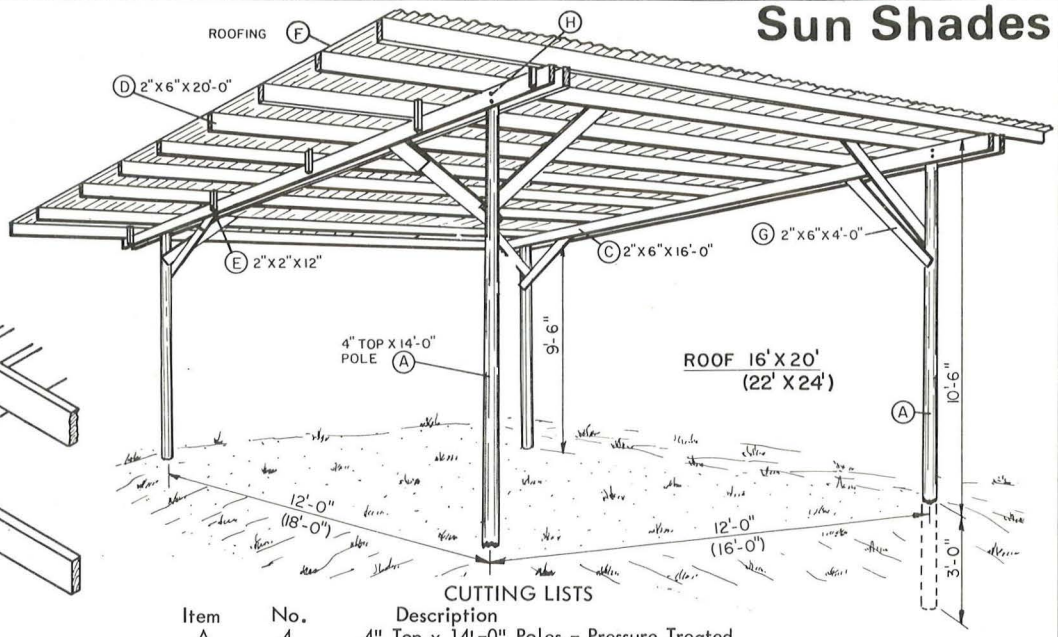

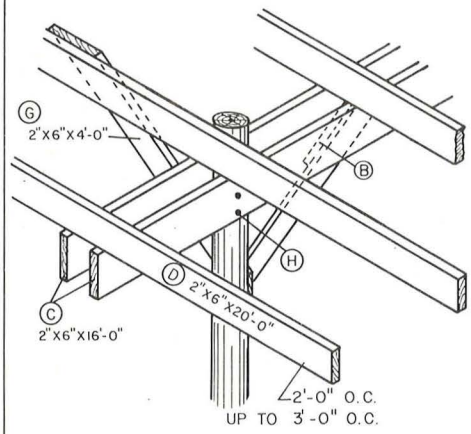

CORNER DETAIL

CUTTING LISTS

Item	No.	Description	Item	No.	Description
A	4	4" Top x 14'-0" Poles - Pressure Treated			
B	4	2" x 6" x 2'-0" Filler			
G	8	2" x 6" x 4'-0"			
H	8	½" x 9" Bolt			
Poles	12' x 12' O.C.		Poles	16' x 18' O.C.	
Roof	16' x 20'		Roof	22' x 24'	
C	4	2" x 6" x 16'-0"	C	4	2" x 10" x 22'
D	9	2" x 6" x 20'-0"	D	12	2" x 6" x 24'
E	10	2" x 2" x 12"	E	12	2" x 2" x 12"
F	10	16'-0" x 26" Corr. Metal	F	24	12'-0" x 26" Corr. Metal

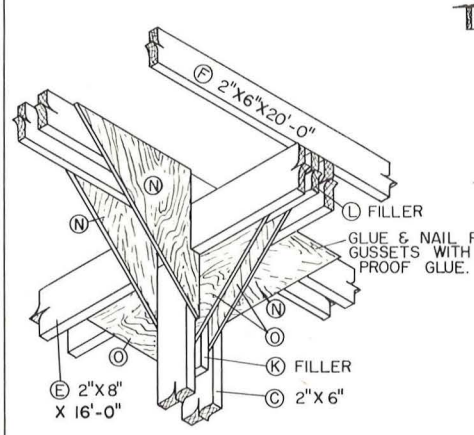

CORNER DETAIL

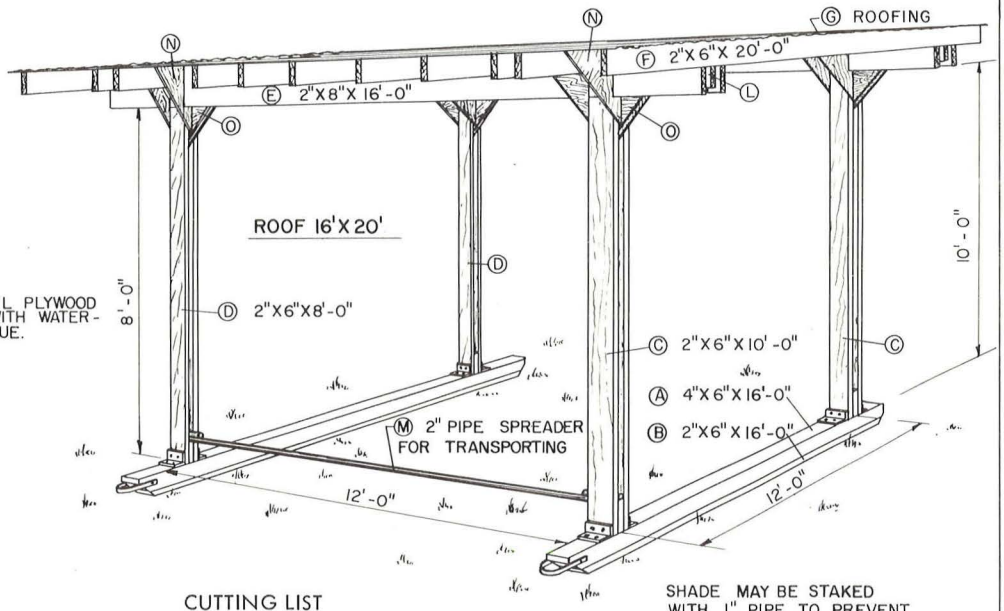

SHADE MAY BE STAKED WITH 1" PIPE TO PREVENT OVERTURN.

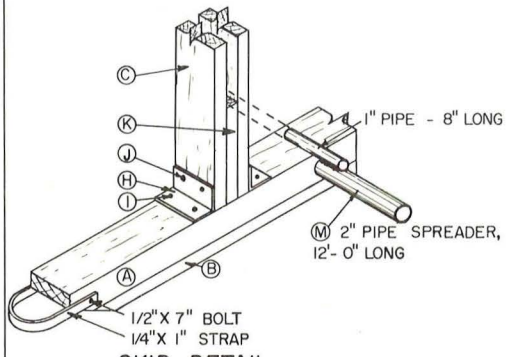

SKID DETAIL

CUTTING LIST

Item	No.	Description
A	2	4" x 6" x 16'-0" } Pressure-Treated
B	2	2" x 6" x 16'-0" } Pressure-Treated
C	4	2" x 6" x 10'-0"
D	4	2" x 6" x 8'-0"
E	4	2" x 8" x 16'-0"
F	11	2" x 6" x 20'-0"
G	10	16'-0" x 26" Corr. Metal
H	8	3" x 3" x ¼" x 5" Angle
I	16	⅜" x 3" Lag Screw
J	8	½" x 9" Bolt
K	8	2" x 6" x 12"
L	4	2" x 6" x 4'-0"
M	1	2" x 12'-0" Pipe
	2	1" x 8" Pipe

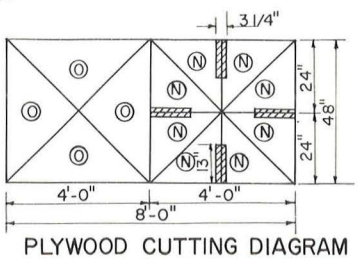

PLYWOOD CUTTING DIAGRAM
2 SHEETS 3/8" EXT. TYPE REQ'D.

Tilting Cow Table

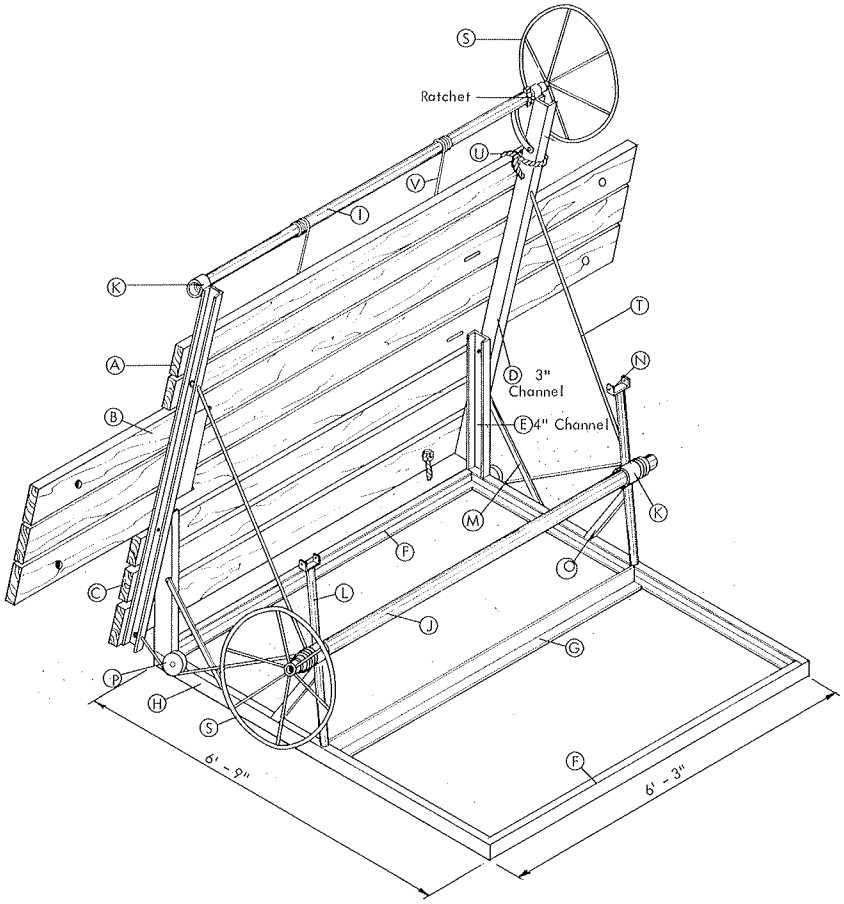

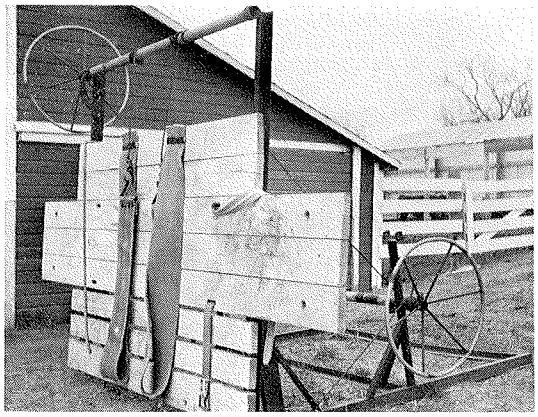

Courtesy of North Dakota State University

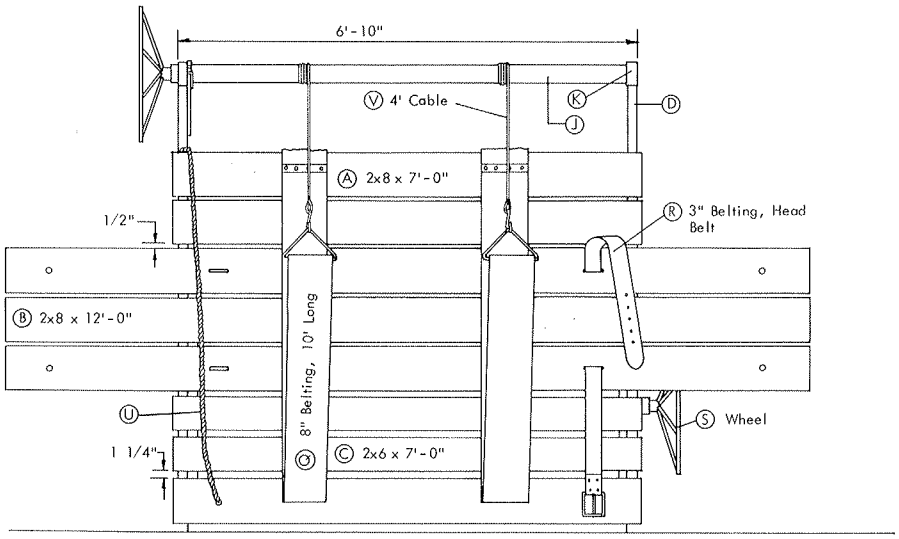

LIST OF MATERIALS

Item	No.	Description
A	2	2x8 x 7'-0"
B	3	2x8 x 12'-0"
C	3	2x6 x 7'-0"
D	2	3" Channel - 7'-0" Long
E	2	4" Channel - 26" Long
F	2	3" Channel - 6'-3" Long
G	1	3" x 3" Angle Iron - 6'-0" Long
H	2	3" Channel - 6'-9" Long
I	1	3" Pipe - 7'-0" Long
J	1	3" Pipe - 7'-3" Long
K	4	$3\frac{1}{2}$" Pipe (3.548 I.D.) - 2" Long
L	2	3" Pipe - $21\frac{1}{2}$" Long
M	2	$\frac{1}{4}$" x 1" Strap Iron - 29" Long
N	2	$\frac{1}{4}$" x 2" Strap Iron - 8" Long
O	2	2" x 2" x $\frac{1}{4}$" Angle Iron - 24"
P	2	Pulleys
Q	2	8" Belting - 10' Long
R	1	3" Belting - 5' Long
S	2	Wheels
T	2	Cable - 11' Long
U	1	Trip Rope - 6' Long
V	2	Cable - 4' Long

Tilting Calf Table

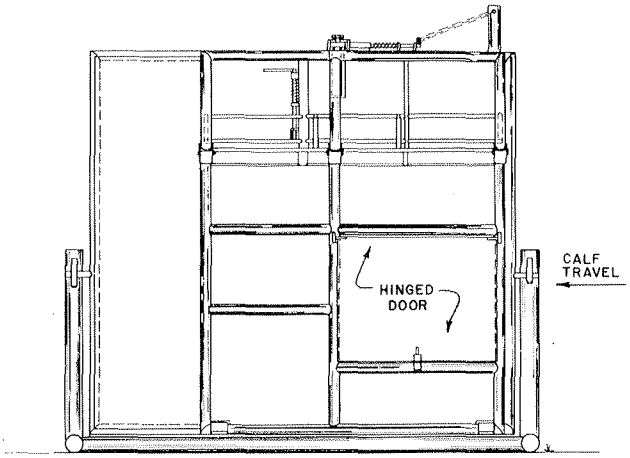

RIGHT SIDE VIEW

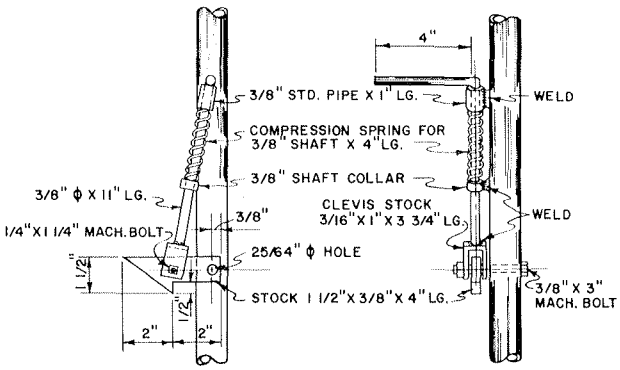

DETAIL OF TIP LATCH
(ONE REQUIRED)

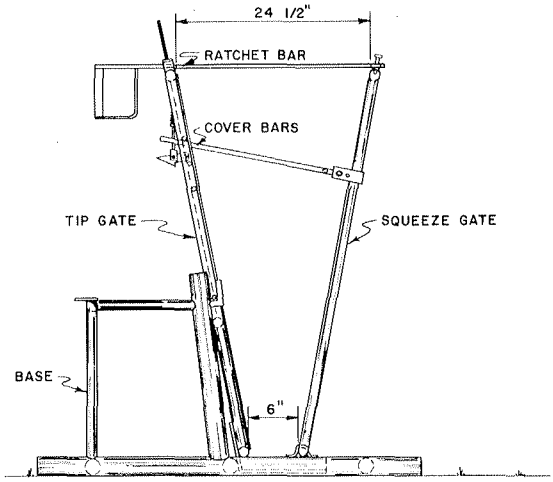

FRONT END VIEW

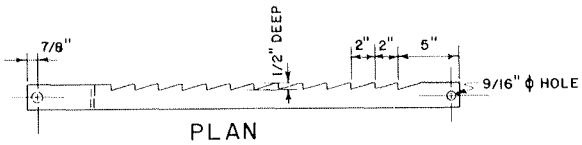

PLAN

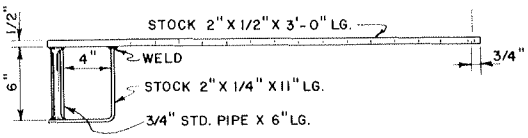

ELEVATION
DETAIL OF RATCHET BAR
(ONE REQUIRED)

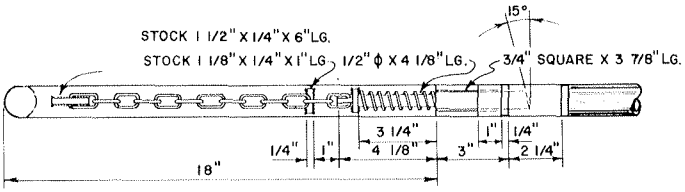

PLAN

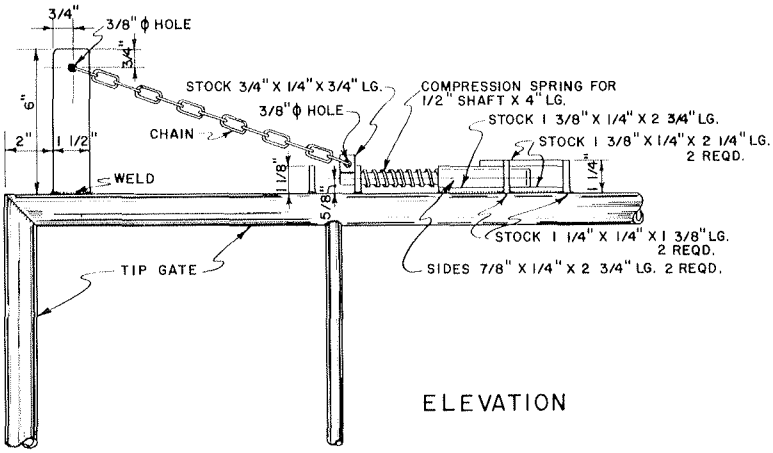

ELEVATION

DETAILS OF SQUEEZE LATCH
(ONE REQUIRED)

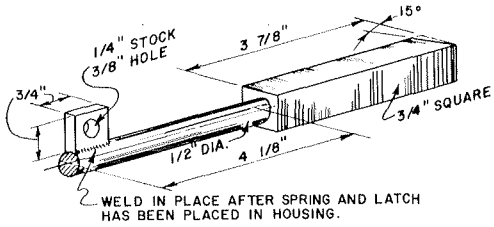

LATCH DETAIL

TILTING CALF TABLE PIPE FRAME		
USDA '64	EX. 5969	SHEET 1 OF 2

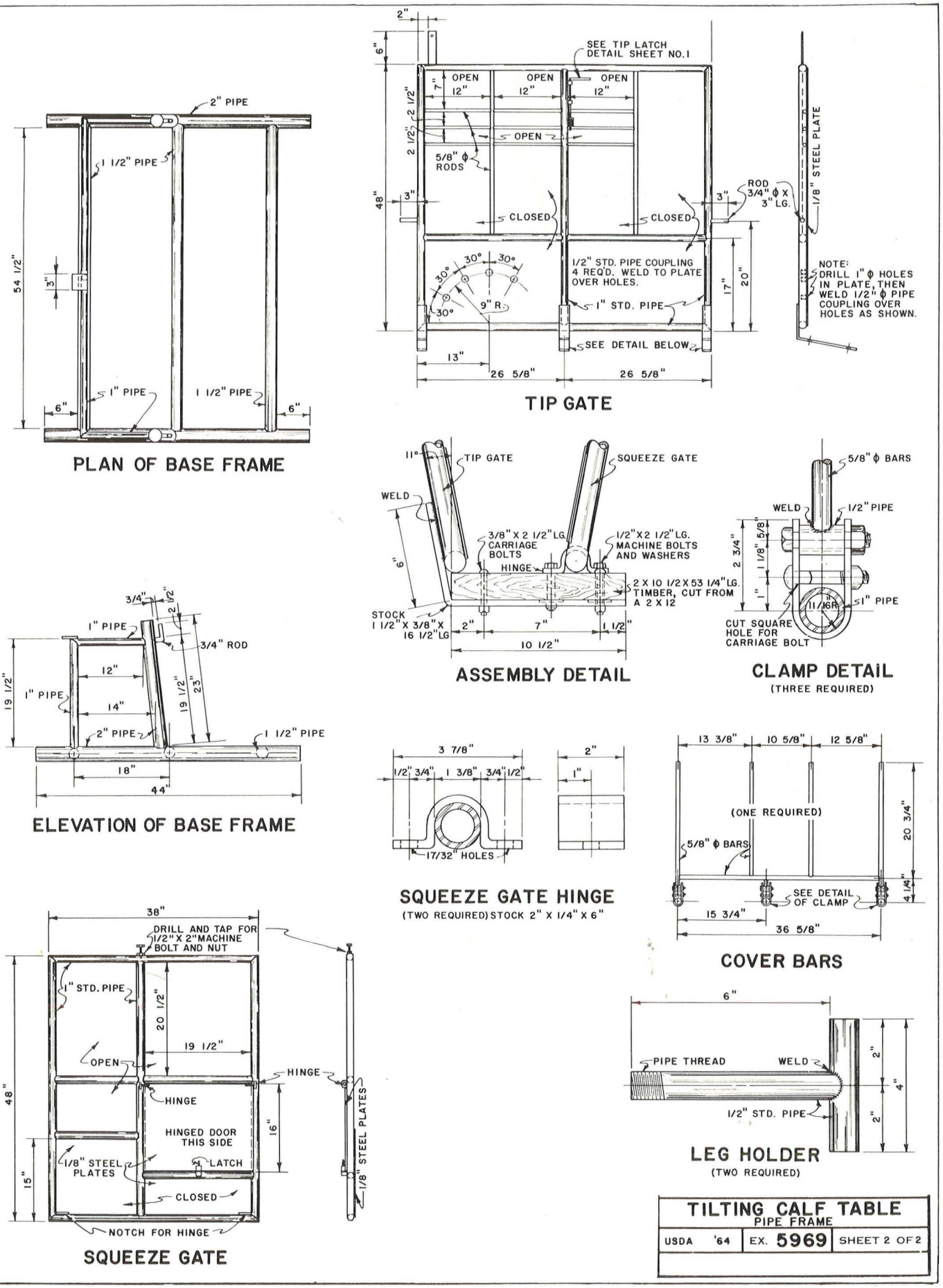
2" PIPE
1 1/2" PIPE
54 1/2"
3"
6"
1" PIPE
1 1/2" PIPE
6"
PLAN OF BASE FRAME
2"
6"
SEE TIP LATCH DETAIL SHEET NO. 1
OPEN 12"
OPEN 12"
OPEN 12"
7"
2 1/2"
2 1/2"
OPEN
5/8" ϕ RODS
48"
3"
CLOSED
CLOSED
3"
ROD 3/4" ϕ X 3" LG.
1/8" STEEL PLATE
30°
30°
30°
30°
9" R.
1/2" STD. PIPE COUPLING 4 REQ'D. WELD TO PLATE OVER HOLES.
1" STD. PIPE
17"
20"
NOTE: DRILL 1" ϕ HOLES IN PLATE, THEN WELD 1/2" ϕ PIPE COUPLING OVER HOLES AS SHOWN.
SEE DETAIL BELOW
13"
26 5/8"
26 5/8"
TIP GATE
11°
TIP GATE
SQUEEZE GATE
WELD
6"
3/8" X 2 1/2" LG. CARRIAGE BOLTS
1/2" X 2 1/2" LG. MACHINE BOLTS AND WASHERS
HINGE
2 X 10 1/2 X 53 1/4" LG. TIMBER, CUT FROM A 2 X 12
STOCK 1 1/2" X 3/8" X 16 1/2" LG
2"
7"
1 1/2"
10 1/2"
ASSEMBLY DETAIL
5/8" ϕ BARS
WELD
1/2" PIPE
2 3/4"
5/8"
1 1/8"
1"
11/16 R
1" PIPE
CUT SQUARE HOLE FOR CARRIAGE BOLT
CLAMP DETAIL
(THREE REQUIRED)
3/4"
2 1/2"
1" PIPE
3/4" ROD
12"
19 1/2"
1" PIPE
14"
19 1/2"
23"
2" PIPE
1 1/2" PIPE
18"
44"
ELEVATION OF BASE FRAME
3 7/8"
1/2" 3/4" 1 3/8" 3/4" 1/2"
17/32" HOLES
2"
1"
SQUEEZE GATE HINGE
(TWO REQUIRED) STOCK 2" X 1/4" X 6"
13 3/8"
10 5/8"
12 5/8"
(ONE REQUIRED)
5/8" ϕ BARS
20 3/4"
4 1/4"
SEE DETAIL OF CLAMP
15 3/4"
36 5/8"
COVER BARS
38"
DRILL AND TAP FOR 1/2" X 2" MACHINE BOLT AND NUT
1" STD. PIPE
20 1/2"
19 1/2"
OPEN
HINGE
HINGE
48"
HINGED DOOR THIS SIDE
16"
1/8" STEEL PLATES
LATCH
15"
CLOSED
1/8" STEEL PLATES
NOTCH FOR HINGE
SQUEEZE GATE
6"
PIPE THREAD
WELD
2"
4"
1/2" STD. PIPE
2"
LEG HOLDER
(TWO REQUIRED)
TILTING CALF TABLE
PIPE FRAME
USDA '64
EX. 5969
SHEET 2 OF 2

CONSTRUCTION

MATERIALS

Wood

Common boards are nominally 1" thick and are 4", 6", 8", 10", and 12" wide. Boards are available with square edges, tongue and groove, or with a shiplap joint.

Square Tongue and Groove Shiplap

Structural lumber is nominally 2" thick and 4", 6", 8", 10", and 12" wide. Standard lengths are 4' to 18' in multiples of 2'. Longer lengths can be purchased, but usually at a premium.

Rough lumber is full dimension. It is usually more difficult to work with and finish than surfaced wood. Dimension lumber is surfaced smooth on four sides and is, therefore, less than full dimension.

Wood Preservatives

- Use commercially preservative-treated lumber for all outdoor and barn wood equipment.
- Buy and use lumber pressure-treated with oil-base preservatives for structural framing that will be exposed to soil or termite attack and other framing pieces that would be expensive to replace.

The heartwood of all species has some natural decay resistance. Sapwood has low resistance and must be treated if long life is desired. The most resistant species are baldcypress, cedars, junipers, locust, and redwood. Even these species are preservative treated where high decay hazards exist, and where failure would require expensive repairs.

Wood preservatives fall into general classes: oils, such as creosote and petroleum solutions of pentachlorophenol; and waterborne salts that are applied as water solutions. These preservatives are applied with or without pressure. More protection is gained with pressure than with brush, dip, or spray application. Oils are usually more protective than water-soluble salts.

Brushing or dipping oil preservatives is effective for wood that will be exposed to moisture for only short periods of time. All cutting, framing, and boring of holes should be done before treatment.

Brushing or dipping the wood with oil or water soluble solutions is seldom worthwhile for wood that will be exposed to weather, soil, or water.

Wood treated with water-soluble preservatives can be painted after the wood has dried. Wood treated with oils like creosote and penta can stain through paint unless the treated wood has weathered or been cleaned. If light oils are used for treatment, the wood can be painted as soon as the solvent oils have evaporated.

Do not use oil-preservative-treated lumber where small children can come in contact with it. Protect hands and other parts of the body from direct contact with wet preservatives.

Hardboard

Hardboard is made of reconstituted natural wood fibers that have been pressed into panels. The panels have no grain, and one or both surfaces can be smooth. The surface is hard and the installed panels are impact resistant if properly supported. The panels can be formed to curves. The panels are 4' wide and up to 16' long, and are either 1/8", 3/16", 1/4", or 5/16" thick.

Hardboards may be tempered or standard. Tempered boards are stronger and have a higher moisture resistance than standard boards. Tempered boards are used for exterior projects and for interior projects where moisture resistance is necessary. Standard boards are commonly used for interior walls and ceiling, and may be used for protected exterior surfaces. Follow manufacturers' application recommendations to avoid buckling due to moisture changes.

Plywood

Plywood for exterior uses, or where alternate wetting and drying may occur, should be of Exterior or Type 1 rating.

Plywood is manufactured in two basic types, exterior and interior, and in a variety of appearance grades within each type. The glue bond and the grade of the plies determine the type. Exterior plywood has waterproof glue lines and all plies are at least grade C. Sheathing has waterproof glue lines and grade D exterior plies. Sheathing should not be used for outdoor uses unless covered with roofing or siding.

The most common plywood panel size is four by eight feet. Standard thicknesses for sanded panels are 1/4" to 3/4" in 1/8" gradations. Sheathing thicknesses range from 5/16" to 3/4".

Attach sheets with nails or screws that seal the hole they make as they pass through the sheet. If you miss a framing member with a nail, pull the nail and fill the hole with a sheet metal screw. Use galvanized nails in steel (aluminum in aluminum) siding and roofing. The needed size and length of nail or screw depends on the shape of the metal sheet, the framing, and the strength the fastener must have. Follow the sheet manufacturers' recommendations.

Sheet Metal

Most steel products will rust. Rusting causes the metal to slowly deteriorate and lose its strength. Rusting can be delayed or prevented by covering the metal with paint, zinc coatings (galvanizing), or by adding certain ingredients when making the metal.

Zinc coating of steel is common for products that will be exposed to moisture and weather. The thickness of the coating determines the length of time the product will withstand rusting. A 1¼-ounce coating is the standard weight of zinc coating for roofing and siding. For extra long life, 'Seal of Quality' sheets with a 2-ounce coating are used. Galvanized metal can also be painted, which will add more life.

Iron-free metals do not rust, but will wear away because of weathering or corrosion. Weathering and corrosion can be delayed or prevented by covering with paint or other coating.

Steel and aluminum sheets are made in several shapes and thicknesses. Sheets are 26", 30", 36", or 48" wide. Common lengths are 5'-12'. The thickness and shape determine the strength of the sheet. Check with an engineer or follow an engineered plan before buying and using metal sheets.

CONCRETE

Concrete is a mixture of portland cement, water, and aggregates. Portland cement is sold in bulk, or in bags of one cubic foot (94 lb). The aggregates provide volume at low cost, comprising 66% to 78% of the concrete.

The cement and water form a paste which hardens and glues the aggregates together. The quality of concrete is directly related to the binding qualities of this cement paste.

Concrete can be made to take almost any form. It is used widely in residential work due to its fairly low cost and the ease of handling small batches by the amateur.

Concrete can be finished in either a smooth or rough texture. It can be colored with pigments or can be painted.

Advantages and Disadvantages

Concrete is a durable material. However, if not properly mixed and installed, it will crack. It sometimes buckles when placed on a poor foundation. Some people consider it difficult to place due to its weight, the special equipment needed, and the speed with which it must be handled.

Air Entraining

Max. Aggregate Size	Amount of Air
1½", 2", or 2½"	4% to 6%
¾", or 1"	5% to 7%
½"	6½% to 8½%
3/8" or less	9%

Construction

Remove all sod and vegetable matter. The subgrade must provide uniform support and be easily drained. The top six inches of subgrade should be of sand, gravel or crushed stone where subgrades may be water soaked much of the time.

Use reinforcing in pavements poured over soft or spongy soils. Use 6 x 6 #10 wire mesh. Place the wire near the top of slabs that will support light loads but are subject to frost heaving.

Before the concrete is placed, the subgrade should be thoroughly dampened. Place the concrete where it will be used. This will help prevent scaling and dusting that may result from too much handling. Spade or vibrate along the forms to eliminate voids or honeycombs.

Remove concrete from wheelbarrows or mixers and spread as soon as possible. After it has been dumped and spread, strike it off to the proper grade, screed the surface, and then darby (using a darby or bull float to smooth and level the surface).

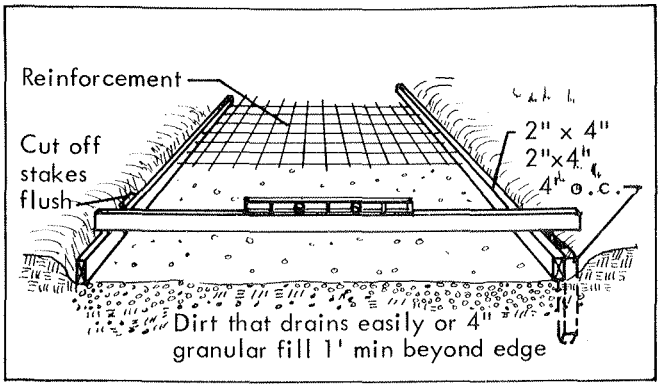

Preparing subgrades and laying reinforcing if needed

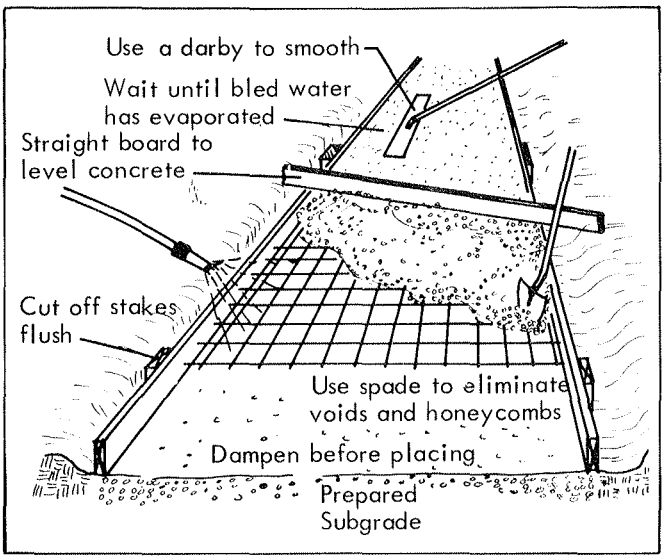

Placing the concrete

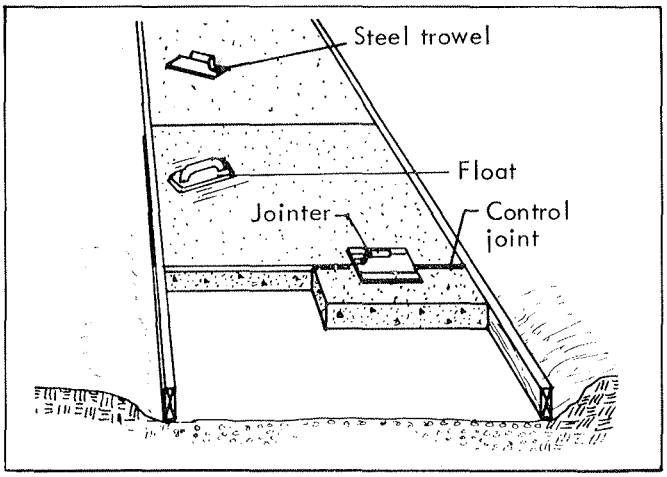

Control joints usually spaced at intervals equal to width of slab, but not more than 20 feet apart

It is very important that the first operations of placing, screeding, and darbying be completed before any bleeding occurs. (Bleeding refers to excess water in the concrete rising to the surface).

After all bleeding water has evaporated and the concrete has started to stiffen, start the other finishing operations. These include edging—rounding the edge to prevent chipping; and jointing—cutting a partial joint, called control joint, to induce possible cracking to occur in the joint.

After edging and hand jointing, float the slab. Floating will embed large aggregates just beneath the surface, remove slight imperfections and tool marks, and prepare the surface for other finishing.

The final smoothing is done with a steel trowel immediately following floating. If a rough surface is desired, final smoothing is omitted.

Control joints are cut across each slab to control cracking. Cracks, if they occur, will usually be in the joints. Cut control joints soon after the concrete has been placed to work coarse aggregates away from the joints. Space them about as far apart as the concrete is wide.

Isolation joints permit the slab to move with the earth. Place isolation joints along existing improvements such as buildings, concrete water tanks, or paved drives.

Expansion joints are constructed the same as an isolation joint and should be installed in new walks and long drives.

Curing

Concrete does not dry—the paste sets by a chemical reaction between cement and water. Keep the surface of the concrete damp at least five days. Curing will continue for months. Remove forms after about five days for slabs, ten days for walls, 28 days for structural elements.

Outside concrete work in cold weather.

Concrete cures very slowly at temperatures below 50 degrees. Water frozen in uncured concrete will expand and cause damage to the concrete. Concrete should be cured a minimum of 48 hours before it is permitted to freeze, but it is best to prevent freezing for four to five days.

Do not place concrete over frozen ground. Use Type III portland cement, or Type I with calcium chloride dissolved in the mixing water at the rate of two pounds per bag of cement.

When air temperatures are below 40 degrees:

- Heat the sand, gravel, and water to just below 150 degrees. Heat the sand and gravel in separate piles over old culvert pipe, a section of smokestack, or other improvised firebox. Place a fire inside. Stir and rake the materials frequently to assure even heating.
- Always remove snow and ice from forms before placing concrete.
- Place the concrete right after mixing when the concrete temperature should be between 60 and 80 degrees.
- Protect the placed concrete with a cover to retain as much heat as possible. Canvas, straw or hay are often used as covers. Protect for four or five days.
- Maintain temperature of concrete at 70 degrees for three days or 50 degrees for five days. Do not allow to freeze during next four days. Use a vented heater indoors.
- Remove forms only after sufficient curing. Pour hot water on the concrete. If properly cured, there will be no effect, but if frozen, the concrete will soften.

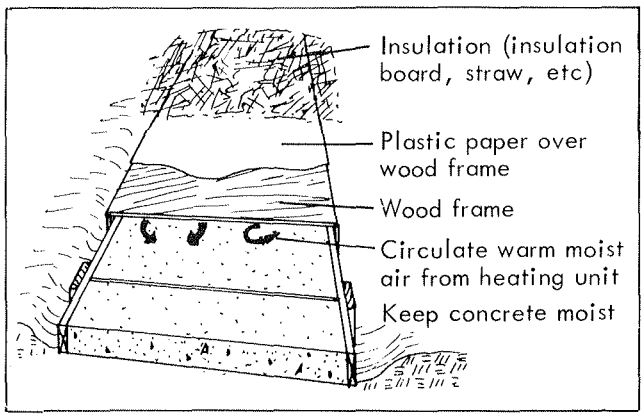

Protecting concrete in cold weather

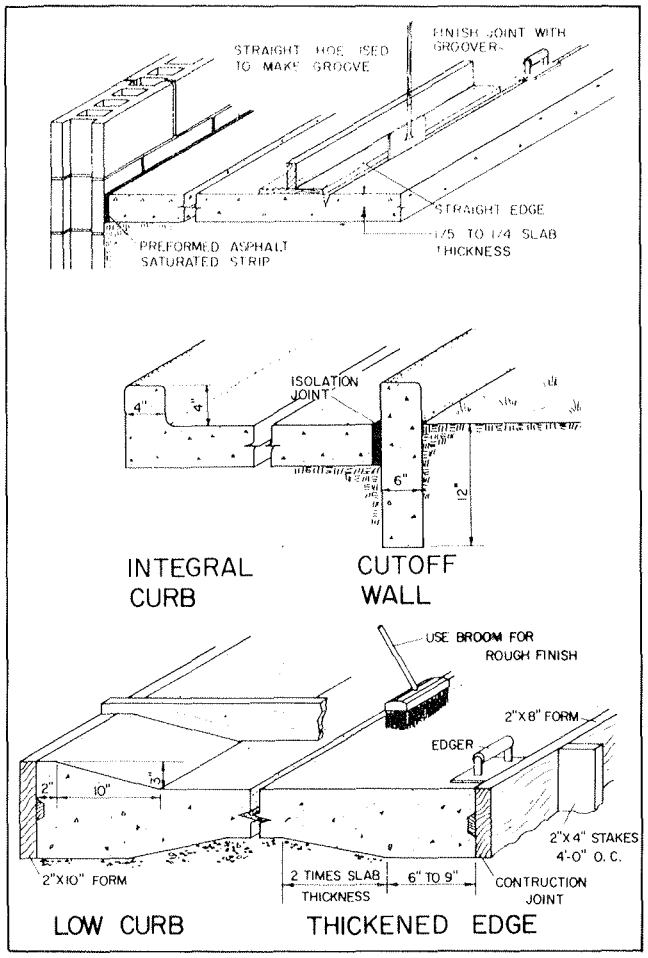

Isolation joints permit the slab to move with the earth. Place isolation joints along existing improvements such as buildings, water tanks or paved drives.

Outside concrete work in hot weather.

As the temperature rises above 70 degrees, the curing rate increases. Evaporation of water from the concrete also increases. A combination of wind, high temperature, and low humidity will dry concrete too rapidly and weaken it.

To help prevent this, keep the fresh concrete damp for at least five days and place a sheet of 4 mil plastic over the dampened concrete to help retard evaporation.

In extremely hot weather it may be necessary to reduce the temperature of the freshly mixed concrete. Aggregates should be stockpiled in the shade, if possible, and cool water used to mix the concrete. Curing must be started promptly to retard the evaporation of water.

PAINT

There are three basic steps to painting. The first is to select the right paints for the various surfaces to be painted. The surfaces must then be adequately prepared, and finally, the selected paint must be properly applied.

Selecting Paints

Choose paints that have the desired color, can be applied successfully over the material needing paint, and can withstand the weathering or special conditions in your locality. Most local paint dealers know of any special conditions. It is good economy to buy a quality paint. Quality paint will lengthen the time between repaintings, and thus reduce costs.

Wood and most metals can be painted with either solvent- or water-base paint. But first these materials require a primer coat to seal the surface against moisture.

Rough-sawn lumber, dense smooth woods, and knotty or flat grain boards or plywood of oak, pine, spruce and fir can sometimes be more economically stained with a heavy pigmented oil stain rather than painted.

Use only lead-free paint on equipment to be used where children or animals may lick or eat the paint.

Some lumber used for siding is primed at the factory and does not need a prime coat. Follow the lumber manufacturer's recommendation on the paint to use. In most cases, they recommend a standard house paint.

Chalk-resistant paints should be used where chalk rundown would discolor masonry or metal. Where rundown would not be objectionable, the self-cleaning chalking paints could be used.

Porches, steps and screens should be painted with abrasion-resistant paints. There are several types of paint that are specially formulated for these kinds of surfaces.

Special solvent-thinned trim paints are available for wood trim, screen frames, shutters and other small areas of a house.

There are two types of natural finishes—surface coating finishes and penetration finishes. Surface coatings are not very durable and must be refinished every year or two to prevent discoloration in the woods. Some penetrating finishes are very durable.

Forest Products Laboratory Stain

Ingredients and methods of application for a stained finish on wood is explained in detail in the Forest Products Laboratory publication, FPL-046. You can obtain a copy from the Forest Products Laboratory, USDA, Madison, Wisconsin 53705.

The stain, based on durable red and brown iron oxide pigments, adequately applied to rough surfaces will last up to ten years. When refinishing is necessary, the rough surface-stain system is easily renewed without extensive surface preparation.

Wood Surfaces

All surfaces must be cleaned of dirt, oil, scale, and other impurities. Surfaces should be cleaned and dusted just prior to painting.

Metal Surfaces

Remove all rust, oil, and grease, and smooth roughened surfaces. A wire brush, steel wool, or sandpaper will usually remove rust and rough areas. Remove oil and grease with solvents such as mineral spirits, and then rinse thoroughly. A primer must be applied immediately after cleaning.

Painting Wood

Most paint manufacturers recommend applying a prime coat of paint to seal the surface against moisture. Use a primer recommended by the paint manufacturer. Apply a prime coat to all new surfaces, to all repaired surfaces, to surfaces that have little old paint left, and to old surfaces that are very chalky. Prime as soon as possible after all the repairing and cleaning is completed, but before filling with putty.

The Forest Products Laboratory recommends applying a water-repellent preservative before priming new wood that has not been so treated. The preservative contains penta and should be allowed to dry for two warm, sunny days before applying the primer. Ask your paint dealer about the recommendation of his paint manufacturer.

Use a zinc-free oil-base primer for new wood and spot priming when the top coats will be a solvent-thinned paint. Most manufacturers recommend using a solvent-thinned primer when the top coat will be an exterior emulsion or latex paint.

After a surface is primed, apply any caulking that is needed.

Masonry Surfaces

Remove all dirt, loose particles, oil, efflorescence, and old paint that is loose, peeling, or heavily chalked. Efflorescence is a white salt-like material adhering to concrete or mortar and is caused by salts within masonry coming to the surface. Dirt, efflorescence, and loose particles can usually be removed by washing the surface with a cleaner or detergent and water.

Poured or precast concrete may have a "release agent" on the surface which must be removed with a solvent or by several months of weathering.

Masonry floors, decks, porches, and patios may require a special treatment to provide an adequate base over which to apply paint. Manufacturers of paint for this kind of surface usually give instructions on how to prepare these surfaces.

Concrete floors should not be painted until the concrete has aged at least three months. Slick concrete floors should be roughened before being painted. Treat slick floors with one gallon of muriatic acid mixed in two gallons of water. Brush the acid into the floor until it fizzes in every area. Rinse the acid off with clear water, examine the floor, and retreat the spots that were not roughened. Floors with an even coarse texture can be painted without an acid treatment.

Paint will not fill the pores of brick, block, or stucco. These surfaces must first be plastered if a smooth surface is desired.

Iron, copper, or other metallic objects imbedded in masonry surfaces to be painted with water-thinned paints must be primed with a good anti-corrosive primer.

After all impurities are removed or primed, wash or hose the surface. Do not wash or hose the surface if efflorescence was present. Allow the surface to dry thoroughly if solvent-thinned paints will be applied. The surface need not be completely dry before applying water-thinned paints.

Painting Metal

Paint only when the surface is clean and dry. Apply a primer to new metal and to metal that has had old paint removed. Good primers will have either zinc-dust, red lead, zinc yellow, blue lead, oxide of iron, or zinc-dust oxide as one of its ingredients. Zinc-dust paints must be stirred frequently.

After the primer has dried sufficiently, apply one or two coats of finish paint. Most ordinary house or trim paints can be applied as finish coats over any of the recommended prime coats.

Painting Galvanized Metal

Follow the procedures above concerning preparing and painting metal. Zinc-dust paints in an oil, alkyd, or phenolic base adhere best to galvanized surfaces under most conditions. Cement paints in an oil base work nearly as well, and are recommended where color is desired. Latex paints made for galvanized steel are being used but have not been tested as extensively as other metal paints. These latex paints seem to be especially suitable for single coat coverage.

FASTENERS

Nails

Nails that have special coatings, such as zinc, are intended primarily for use where corrosion and staining may occur. Cement coated nails will increase the strength of a joint for a short period of time, but the joint strength will drop to the strength of a plain-nail joint in a few months.

In general, annular-grooved and spirally-grooved nails will give stronger joints than plain nails. The strength of the nail is greatest when it is driven perpendicular to the grain in the wood.

Toenailing—slant driving of nails through the edge or end of a board—is most effective when (1) the longest nail that will not cause excessive splitting is used, (2) the entry point is about one-third the length of the nail, (3) the nail is driven at a 30 degree slope, and (4) the shank of the nail is buried without excessive damage to the wood.

Nails will be strongest when driven into lead holes that are slightly smaller than the nail. Lead holes also prevent or reduce splitting of the wood and are used mainly in hardwoods.

Spacing

Space nails about six inches apart for most work. Nails with glue produce a strong, durable joint. The nails secure the joint until the glue cures.

Predrilling lead holes may be necessary for nails placed near edges of boards. The drill bit should be slightly smaller than the nail.

SIZE	LENGTH INCHES	WIRE GAGE	APPROX. NO./LB.	APPROX. STRENGTH POUNDS PULL (1)	LATERAL (2)
COMMON NAILS				Douglas Fir, Larch or Southern Pine	
2d	1	15	847		
3d	1 1/4	14	543		
4d	1 1/2	12 1/2	294		
5d	1 3/4	12 1/2	254		
6d	2	11 1/2	167	29	63
7d	2 1/4	11 1/2	150		
8d	2 1/2	10 1/4	101	34	78
9d	2 3/4	10 1/4	92		
10d	3	9	69	38	94
12d	3 1/4	9	63	38	94
16d	3 1/2	8	49	42	107
20d	4	6	31	49	139
30d	4 1/2	5	24	53	154
40d	5	4	18	58	176
50d	5 1/2	3	14	63	202
60d	6	2	11	68	223
SPIKES					
10d	3	6	32	49	139
12d	3 1/4	6	31	49	139
16d	3 1/2	5	24	53	155
20d	4	4	19	58	176
30d	4 1/2	3	14	63	202
40d	5	2	12	68	223
50d	5 1/2	1	10	73	248
60d	6	1	9	73	248
5/16	7	5/16"	6	80	289
3/8	8-12	3/8"	5-3	96	380
HARDENED THREADED NAILS					
6d	2	12	190	80	69
8d	2 1/2	11	117	90	82
10d	3	10	78	100	94
12d	3 1/4	10	73	100	94
16d	3 1/2	9	57	110	107
20d	4	7	36	135	139
30d	4 1/2	7	31	135	139
40d	5	7	27	135	139
50d	5 1/2	7	23	135	139
60d	6	7	18	135	139

(1) Per inch penetration of point
(2) For penetration of 11 diameters

Nails commonly used and their approximate strength in pounds

Selection of nails for use with different materials

	NAIL TO USE [1]
1″ stock	8d
2″ stock	16d to 20d
3″ stock	40d to 60d
Concrete forms	common or double headed nails
Toenailing studs	10d
Sheathing; roof, wall, and floor	8d
Roofing	
Aluminum	1¾″ to 2½″ aluminum nail with rubber washers.
Asphalt shingles	Large head roofing nail
Wood shingles	3d to 4d
Nailing steel sheet metal (roofing and siding)	Self-tapping screws, helical drive screws with lead washers.
Nailing to concrete	Concrete or cement nails or helical drive nails or drive bolts.
Plywood [2]	
3/4″ plywood	6d casing or 6d finishing
5/8″ plywood	6d or 8d finishing nails
1/2″ plywood	4d or 6d
3/8″ plywood	3d or 4d
1/4″ plywood	3/4″ or 1″ brads; 3d nails

[1] Recommendation: Use galvanized hardened threaded nails for most wood outdoor projects. Use aluminum nails with aluminum sheets.

[2] The nailing strength of plywood is about the same as solid wood, but the greater resistance to splitting when nailed near the edge is a definite advantage.

Wood Screws

Lubricating the surface of a screw with soap is recommended to facilitate insertion, especially in dense woods.

Screws should always be turned in. They should never be started or driven with a hammer as this will tear the wood fibers and injure the screw threads, seriously reducing the load carrying capacity of the screw.

Which Screw to Use

For maximum strength, screw threads should penetrate seven shank diameters, or about seven times the recommended shank lead hole.

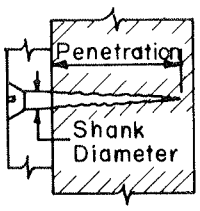

For Lumber: Use Number 6 screws into one inch lumber; Number 12 into two inch lumber

For Plywood: (Recommended minimum size and minimum length)

3/4" plywood: Number 8 screw, 1½" long,
5/8" plywood: Number 8 screw, 1¼" long,
1/2" plywood: Number 6 screw, 1¼" long,
3/8" plywood: Number 6 screw, 1" long,
1/4" plywood: Number 4 screw, ¾" long.

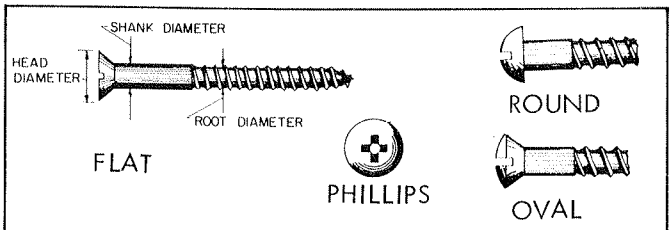

	NO. OF SCREW	SHANK HOLE SIZE	THREADS ROOT DIAM.	lead hole SOFT	lead hole HARD	THREADS PER INCH
	0	1/16	.040	1/64	1/32	32
	1	5/64	.046	1/32	1/32	28
	2	3/32	.054	1/32	3/64	26
	3	7/64	.065	3/64	1/16	24
1" LUMBER	4	7/64	.075	3/64	1/16	22
	5	1/8	.085	1/16	5/64	20
	6	9/64	.094	1/16	5/64	18
	7	5/32	.102	1/16	3/32	16
	8	11/64	.112	5/64	3/32	15
	9	3/16	.122	5/64	7/64	14
2" LUMBER	10	3/16	.130	3/32	7/64	13
	11	13/64	.139	3/32	1/8	12
	12	7/32	.148	7/64	1/8	11
	14	1/4	.165	7/64	9/64	10
	16	17/64	.184	9/64	5/32	9
	18	19/64	.204	9/64	3/16	8
	20	21/64	.223	11/64	13/64	8
	24	3/8	.260	3/16	7/32	7

Screw dimensions

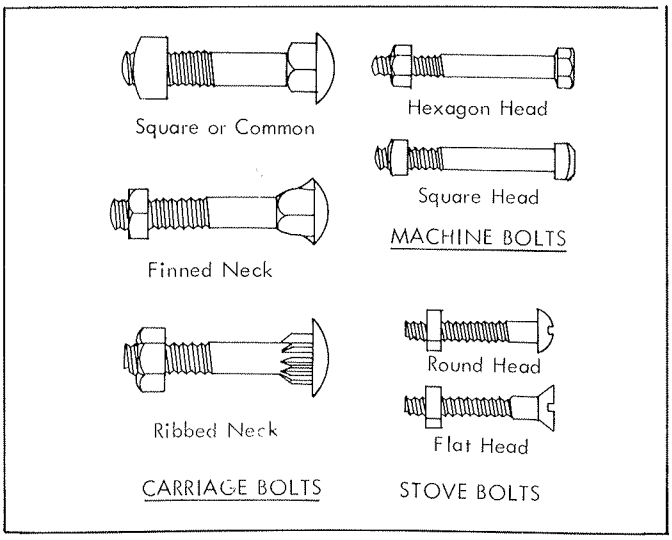

Common bolts used in construction

Glue

The use of glue in joining two pieces of wood is similar to using a welding rod when joining two pieces of steel. The joint itself is stronger than the wood. If something breaks, it will usually be the wood, not the glue.

The wood to be glued should be dry, smooth, and free of dirt, oil, and other coatings. Most purchased lumber has been surfaced on a planer and is usually sufficiently smooth.

To clean dirt, paint, and other coatings from wood, use a scraper, wire brush, steel wool, or other abrasive. Do not use wood that has oil or grease at the joint location.

Generally, preservative-treated wood must be planed prior to gluing to obtain maximum holding power. Wood treated with oil-base preservatives tend to bleed. Buy wood that has been steamed or otherwise cleaned until bleeding has stopped.

Selecting a Glue

PICK the glue for the particular job and LEARN how to use it.

To find a glue that will satisfy all requirements is impossible. Glue should be chosen because it will satisfy the requirements of one job. No glue is foolproof. Well-made joints require woodworking skill and close control of the gluing conditions. Improper use of glues and glued products may result in costly repairs or replacements.

Two glues are recommended for outdoor equipment: Casein and Resorcinol Resin.

- Resorcinol Resin can be used for both wet or dry conditions. Apply glue at 70 degrees or above. Assemble but wait five to ten minutes before applying pressure. Maintain pressure for 10 to 16 hours.
- Casein may be used for dry conditions only. Buy a glue that meets Federal Specification MMM-A-125 Type II. Apply glue at 40° F or above; 70° F recommended. Apply pressure as soon as possible. Maintain pressure for two days at 40° F, 4 hours at 70° F, or 2 hours at 80° F.

Applying Glue

Pressure is usually applied with nails or staples. The commonly used nails are box, galvanized, or cement coated. The nails are not removed after the glue has cured. If staples are used, finish driving the staple with at least one hammer blow. At the end of the pressing time, the glued elements may be moved but should not be used for about one week.

An adequate amount of glue must be applied to the joint. When pressure is applied, some glue should ooze out from around the joint. If it doesn't you aren't using enough glue. Never skimp on the use of a glue; the cost of the glue is a minor item in the total cost of construction.

Joints connecting structural framing are as important as the framing itself. A pressure of one or more nails every eight square inches of the joint is usually required. The best location and size of pressure nails are usually given in a designed plan or in the engineer's recommendations.

SILO CAPACITIES AND FEED DATA

Determining Silo Size*

The capacity of a silo depends mainly on its height and diameter.

Other factors are moisture content of crop when ensiled, length of cut, rate and distribution of filling, amount of grain in corn silage, and maturity of crop. So it is impossible to provide an accurate table.

Of these other factors, crop moisture content is the most important; but, the capacity of the silo on a dry matter basis is reasonably consistent within the range of 50%-70% moisture.

Required Silo Size

Height:

Amount removed, feet/day	Weather	
	cold	warm
Whole corn	1/6'	1/3'-1/2'
Alfalfa-brome	1/6'	1/4'-1/3'
Chopped ear corn	1/6'	1/6'
Cracked shelled corn	1/3'	1/3'

Times the number of days in the feeding period,

Equals the height of settled silage.

Allow at least 10' of extra height for settling and for storage of silo unloader.

Therefore: height = feet/day x days + 10'

Diameter:

Dry Matter fed per day,

Times the days in the feeding period,

Divided by 2000,

Equals total tons needed.

Use total tons, and depth of settled silage in the Table IV to determine diameter.

Therefore: tons = lbs dry matter/day x days ÷ 2000
and: diameter selected from Table IV using height and tons

To convert tons (or pounds) of dry matter to tons (or pounds) of silage, estimate % moisture of silage and multiply weight by the factor below:

% moisture of silage:	40%	45%	50%	55%	60%	65%	70%
Multiply weight of dry matter by:	1.6	1.8	2.0	2.2	2.5	2.8	3.3

Grass or corn silage is commonly stored at about 65% moisture, and haylage at about 50%.

*From "Determining Silo Size and Location", Berge etal, U. of Wisconsin

Dry Matter to be stored per animal unit, if 40% of dry matter comes from concentrates during high production (about 1 lb grain to 3 lb milk). Allows for storage loss and normal feeding waste.

If concentrates supply 50% of the dry matter, decrease the roughage by 10%. If concentrates provide 30% of the dry matter, increase roughage by 10%.

Pounds of dry matter per day

Weight of Cow (lb)	2/3 Hay 1/3 Silage		1/2 Hay 1/2 Silage		1/3 Hay 2/3 Silage		Hay, or Silage
	Hay	Silage	Hay	Silage	Hay	Silage	
800	9.7	4.9	7.3	7.3	4.9	9.7	14.6
1000	12.2	6.1	9.1	9.2	6.1	12.2	18.3
1200	14.7	7.3	11.0	11.0	7.3	14.7	22.0
1400	17.1	8.5	12.8	12.8	8.5	17.1	25.6
1600	19.5	9.7	14.6	14.6	9.7	19.5	29.2

Tons of dry matter per year

Weight of Cow (lb)	2/3 Hay 1/2 Silage		1/2 Hay 1/2 Silage		1/3 Hay 2/3 Silage		Hay, or Silage
	Hay	Silage	Hay	Silage	Hay	Silage	
800	1.8	.9	1.3	1.3	.9	1.8	2.7
1000	2.2	1.1	1.7	1.7	1.1	2.2	3.3
1200	2.7	1.3	2.0	2.0	1.2	2.7	4.0
1400	3.1	1.6	2.3	2.3	1.3	2.7	4.0
1600	3.6	1.8	2.7	2.7	1.8	3.6	5.3

Pounds of dry matter in 2″ layers of tower silos of different diameters

Silo Diameter feet	Pounds Dry Matter* in 2" layers
12'	282
14	384
16	502
18	636
20	785
22'	950
24	1131
26	1329
28	1539
30	1767

*Assuming 15 lb dry matter/cu ft.

Number of cows fed per 2″ layer of corn silage at various feeding rates

Silo Diam. ft	Pounds of Silage Per Day Per Animal						
	20	30	40	50	60	70	80
	Number of animals to consume 2" layer at above rate						
18	106	71	53	42	35	30	28
20	131	87	65	52	43	37	33
22	158	105	79	63	53	45	39
24	188	126	94	75	63	54	47
26	222	144	111	88	74	63	56
28	256	171	128	103	86	73	64
30	295	196	147	118	98	84	74
32	335	223	168	134	113	96	84
34	379	252	189	151	126	108	95
36	424	283	212	169	141	121	106

Maximum exposed surface area for horizontal silos to remove 4″ vertical slice per day

Feeding Rate lb per cow	Square Feet per cow
20	2
30	3
40	4
50	5
60	6
70	7
80	8

Capacities of hay sheds with 20′ sidewalls

Shed Width	Capacity per foot of Length tons		
	Baled	Chopped	Loose
24'	2.0	1.9	0.8
30'	2.6	2.3	1.0
36'	3.1	2.8	1.2
40'	3.4	3.1	1.4

Approximate dry matter capacity of silos

Depth of Settled Silage, ft	Silo Diameter, ft										
	10'	12'	14'	16'	18'	20'	22'	24'	26'	28'	30'
	TONS of dry matter										
20'	8	12	16	21	27	33	40	47	56	65	74
22	9	14	19	24	30	38	48	54	64	74	85
24	11	15	21	27	34	43	52	61	72	83	96
26	12	17	23	30	38	48	58	68	81	94	107
28	13	19	26	35	44	53	64	76	90	104	119
30	15	21	29	38	47	59	71	84	99	115	132
32'	16	23	32	41	52	65	78	93	109	127	145
34	18	25	34	45	57	70	85	101	119	137	158
36	19	28	37	48	62	76	92	109	129	150	172
38	21	30	41	53	67	82	100	118	139	161	185
40	22	32	44	57	72	89	107	127	150	173	199
42'		34	47	61	77	95	115	137	161	186	214
44		37	50	65	82	102	123	146	172	200	229
46		39	53	69	88	108	131	155	183	212	244
48		42	56	74	93	115	140	166	195	226	260
50		44	60	78	99	122	148	175	206	239	274
52'			64	83	105	129	157	186	219	254	291
54			67	88	111	137	165	197	231	267	306
56			71	93	117	144	174	207	243	282	324
58			74	98	123	151	183	218	261	297	339
60			78	102	129	159	192	228	273	309	357
62'					135	167	201	239	287	324	374
64					142	174	210	250	301	339	391
66					149	182	219	260	314	354	407
68					155	190	228	271	328	369	424
70					162	198	237	282	342	384	441
72'								293	356	400	458
74								305	371	415	476
76								316	385	431	493
78								328	400	446	511
80								339	414	462	528

To estimate tons of silage of various moisture contents multiply Tons of dry matter

$$\times \frac{100}{\text{estimated \% dry matter in silage}} = \text{tons actual silage.}$$

Pounds of roughage consumed per day; dry matter consumption=3% of body weight

Weight of Cows	Hay Only	2/3 Hay	1/3 Silage	1/2 Hay	1/2 Silage	1/3 Hay	2/3 Silage	All Silage	2/3 Hay	1/3 Haylage	1/2 Hay	1/2 Haylage	1/3 Hay	2/3 Haylage	All Haylage
Medium Concentrate Levels:															
1000	24.8	16.5	24.9	12.4	37.2	8.3	49.5	74.4	16.5	16.6	12.4	24.8	8.3	33.0	49.6
1200	29.7	19.8	29.7	14.9	44.7	9.9	59.4	89.1	19.8	19.8	14.9	29.8	9.9	39.6	59.4
1400	34.7	23.1	34.8	17.4	52.2	11.6	69.3	104.1	23.1	23.2	17.4	34.8	11.6	46.2	69.4
1600	39.6	26.4	39.6	19.8	59.4	13.2	79.2	118.8	26.4	26.4	19.8	39.6	13.2	52.8	79.2
1800	44.6	29.7	44.7	22.3	66.9	14.9	89.1	133.8	29.7	29.8	22.3	44.6	14.9	59.4	89.2
High Concentrate Levels:															
1000	16.5	11.0	16.5	8.3	24.9	5.5	33.0	49.5	11.0	11.0	8.3	16.6	5.5	22.0	33.0
1200	19.8	13.2	19.8	9.9	29.7	6.6	39.6	59.4	13.2	13.2	9.9	19.8	6.6	26.4	39.6
1400	23.1	15.4	23.1	11.6	34.8	7.7	46.2	69.3	15.4	15.4	11.6	23.2	7.7	30.8	46.2
1600	26.4	17.6	26.4	13.2	39.6	8.8	52.8	79.2	17.6	17.6	13.2	26.4	8.8	35.2	52.8
1800	29.7	19.8	29.7	14.9	44.7	9.9	59.4	89.1	19.8	19.8	14.9	29.8	9.9	39.6	59.4

To convert hay/silage rations to haylage/silage, multiply hay by 2. Larson, U. of Wisconsin

Tons of forage consumed in 365 days

Weight of Cows	Hay Only	2/3 Hay	1/3 Silage	1/2 Hay	1/2 Silage	1/3 Hay	2/3 Silage	All Silage	2/3 Hay	1/3 Haylage	1/2 Hay	1/2 Haylage	1/3 Hay	2/3 Haylage	All Haylage
Medium Concentrate Levels:															
1000	4.5	3.0	4.5	2.3	6.8	1.5	9.1	13.6	3.0	3.0	2.3	4.5	1.5	6.0	9.1
1200	5.3	3.6	5.3	2.7	8.1	1.9	10.9	16.4	3.6	3.6	2.7	5.3	1.9	7.2	10.9
1400	6.4	4.3	6.4	3.2	9.6	2.1	12.7	19.1	4.3	4.3	3.2	6.4	2.1	8.5	12.7
1600	7.2	4.8	7.2	3.6	10.9	2.4	14.6	21.8	4.8	4.8	3.6	7.2	2.4	9.7	14.6
1800	8.1	5.5	8.1	4.1	12.3	2.7	16.4	24.6	5.5	5.5	4.1	8.1	2.7	10.9	16.4
High Concentrate Levels:															
1000	3.1	2.0	3.1	1.5	4.5	1.6	6.0	9.1	2.0	2.0	1.5	3.1	1.1	4.0	6.0
1200	3.6	2.4	3.6	1.9	5.5	1.2	7.2	10.9	2.4	2.4	1.9	3.6	1.2	4.8	7.2
1400	4.3	2.8	4.3	2.1	6.4	1.5	8.5	12.7	2.8	2.8	2.1	4.3	1.5	5.6	8.5
1600	4.8	3.2	4.8	2.4	7.2	1.6	9.7	14.6	3.2	3.2	2.4	4.8	1.6	6.4	9.7
1800	5.5	3.6	5.5	2.7	8.1	1.9	10.9	16.4	3.6	3.6	2.7	5.5	1.9	7.2	10.9

To convert hay/silage rations to haylage/silage, multiply hay by 2. Larson, U. of Wisconsin

High moisture corn feeding schedule for milk production*

Milk	Shelled	Ear	Milk	Shelled	Ear
Pounds per day			Pounds per day		
30	7	8	66	28	30
36	10	11	72	31	34
42	14	16	78	34	38
48	17	18	84	38	42
54	20	22	90	42	46
60	24	26	96	42	Unlimited

*Assumes protein supplement mixed with the high-moisture corn. If corn is fed separately, feed 10 percent less than indicated in the table.

Bedding materials—approximate water-absorbing capacity

lbs of water/lb of bedding	
	WOOD
4.0	Tanning bark
2.5	Dry fine bark
3.0	Pine chips
2.5	sawdust
2.0	shavings
1.0	needles
1.5	Hardwood chips, shavings or sawdust
	CORN
2.5	Shredded stover
2.1	Ground cobs
	STRAW
2.6	Flax
2.8	Oats, threshed
2.5	combined
2.4	chopped
2.2	Wheat, combined
2.1	chopped
3.0	HAY, chopped mature
	SHELLS, HULLS
2.7	Cocoa
2.5	Peanut, cottonseed
2.0	Oats

Capacities of silos per 10 feet of length (level full at 50 cu ft=1 ton)

Depth	Silo Floor Width 20	30	40	50	60	70	80	90	100	Closed End Ratio
10 bu	1800	2600	3400	4200	5000	5800	6600	7400	8200	1/8
tons	45	65	85	105	125	145	165	185	205	
12 bu	2208	3168	4128	5088	6048	7008	7968	8928	9888	1/7
tons	55	79	103	127	151	175	199	223	247	
14 bu	2632	3752	4872	5992	7112	8232	9352	10472	11592	1/6
tons	66	94	122	150	178	206	234	262	290	
16 bu	3064	4344	5624	6904	8184	9464	10744	12024	13304	1/5
tons	77	109	141	173	205	237	269	301	333	
18 bu	3528	4968	6408	7848	9288	10728	12168	13608	14048	1/5
tons	88	124	160	196	232	268	304	340	376	
20 bu	4000	5600	7200	8800	10400	12000	13600	15200	16800	1/4
tons	100	140	180	220	260	300	340	380	420	

Example: 50' wide, 12' deep, 120' long, 1 end closed.

Capacity per 10', from table = 127 tons

Capacity per 120' = 12 x 127 = 1524 tons

Closed end holds additional silage.

Multiply closed end ratio for silage depth times the capacity /10':

1/7 x 127 = 18 (about)

Open end will be less than full. Deduct for capacity lost:

Slope of Silage	Deduction
1/4	closed end capacity
1/2	2 x " " "
1/1	4 x " " "

Assume slope of 1/2

closed end capacity = 18 tons

deduct 2 x 18 = 36 tons

Total capacity = 1544 + 18 - 36 = 1526 tons.

Storage space requirements for feed and bedding

CROP	Lbs/Bu	Lbs/Cu Ft	Freshly Ground Lbs/Bu	Freshly Ground Lbs/Cu Ft
corn 15½%				
shelled	56	44.8	48	38
ear	70	28.0	45	36
corn 30%	(Amounts to yield a bu or c ft of 15½% grain.)			
shelled	67.5	54.0		
ear, ground			89.6	35.8
barley 15%	48	38.4	37	28
flax 11%	56	44.8		
grain sorghum 15%	56	44.8		
oats 16%	32	25.6	23	18
rye 16%	56	44.8	48	38
soybeans 14%	60	48.0		
wheat 14%	60	48.0	50	43

HAY-STRAW	Cu Ft/Ton	Lb/Cu Ft
	LOOSE	
Alfalfa	450-500	4.4-4
Non legume	450-600	4.4-3.3
Straw	670-1000	3-2
	BALED	
Alfalfa	200-330	10-6
Non legume	250-330	8-6
Straw	400-500	5-4
CUT	CHOPPED	
Alfalfa 1½"	285-360	7-5.5
Non legume 3 "	300-400	6.7-5
Straw	250-350	8-5.7

WEIGHTS AND MEASURES

CONVERSIONS

Multiply to the right. (Cu. Ft. x 7.5 = Gal.)
Divide to the left. (Gal. ÷ 7.5 = Cu. Ft.)

CUBIC FEET	7.5	Gallons
	0.4	Bu. Ear Corn
	0.8	Bu. Grain
	1728	Cubic Inches
GALLONS	231	Cubic Inches
	0.133	Cubic Feet
	8.3	Pounds Water
BUSHELS	1.25	Cubic Feet
	2.5	Cu. Ft. Ear Corn
CUBIC YARDS	27	Cubic Feet
concrete	81	Sq. Ft. 4" Floor
concrete	54	Sq. Ft. 6" Floor
ACRES	43,560	Square Feet
	4,840	Square Yards
	160	Square Rods
	1/640	Square Mile
MILES	5,280	Feet
	1,760	Yards
	320	Rods
RODS	16.5	Feet
	5.5	Yards

AREAS AND VOLUMES

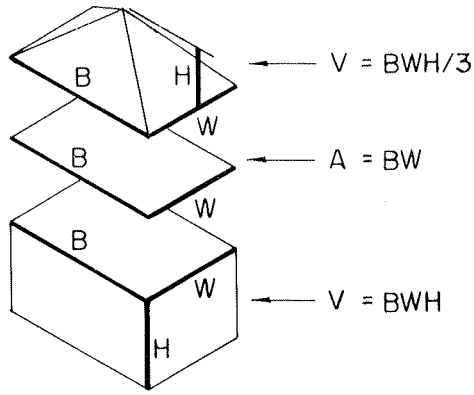

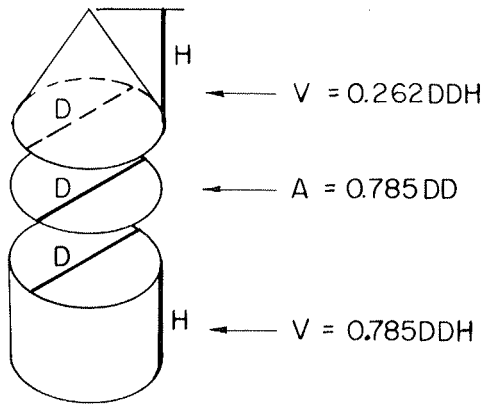

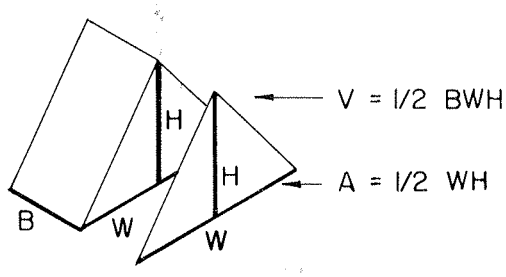

INDEX

Bolts 80
Breeding Rack....67
Bull Pens 65, 66
Bunks 35-44
  Covered 37, 40
  Fenceline....37-39
  Lot 44
  Mechanical....40, 41
  Planning....35, 36
  Tilt-up Concrete....39
Calf Housing
  Cold Barn....20, 63, 64
  Partitions 63
  Pens 20, 61-64
  Stalls....61, 62
  Warm Barn 19, 61, 62
  Watering 21
Cold Buildings....25, 26
Concrete....76-78
  Tilt-up Bunk....39
  Tilt-up Windbreak....53
  Waterer....49, 50
Corrals 68
Detention Pond....28
Drains....16
Fans....23
Fasteners 79-81
Feed Storage 42, 43
Feeders, See *Bunks*
  Fence 37, 40
  Hay & Silage....37-39, 42, 43
  Mineral....47
  Wagon 37
Fences 51-55
  Feeding 37-39, 42, 43
  Stiles and Passes 59
  Stock Guards 60
  Windbreak....51-53
Free Stalls 3-8
  Barn Cross Sections 5
  Dimensions 4
  Layouts....6
  Open Lot....7, 8
Gates....56, 57
Glue....81
Headgates....69
Hinges 58
Inlets 24
Insulation 22, 23
  Milking Plant 15
Latches....58
Loading Chutes....70
Manure Handling 27-33
  Detention Pond 28
  Liquid....27, 28, 30-32
  Milking Plant 32, 33
  Slotted Floors....34
  Solid 29
  Stacking....27
Milking Plant....14-18
  Doors 17
  Drains 16
  Holding Pen 17
  Layouts....18
  Lighting 17
  Milking Room....16
  Milkroom....16
  Ventilation 14
Milkroom, See *Milking Plant*
Milking Room, See *Milking Plant*
Mineral Feeders 47
Nails....79, 80
Paint....78
Passes 59
Pens
  Bull 65, 66
  Calf 20, 61, 63, 64
Screws 80
Shade....8
Silage
  Capacities....82-84
  Carts....38
Slotted Floors 34
Stanchion Barn....9-13
  Cross Sections 10
  Layouts....11
  Milking Room....13
  Milkhouses....13
  Outside Feeding....12
Stiles....59
Stock Guards....60
Strand Fence 55
Sun Shades....71
Tie Stall....2, 9
Tilting Calf Table 73-74
Tilting Cow Table....72
Vapor Barriers 23
Ventilation....22
Wagon, Self Feeding....37
Warm Buildings....22-25
Waste Disposal....27-33
Waterers....49, 50
Weights & Measures....84
Windbreaks 51-53

PUBLICATIONS

PLANS

Dairy Housing

72325A	$2.00	1-Story Flat-Roof Stanchion Dairy Barn
72325B	$2.00	1-Story Gable Roof Stanchion Dairy Barn
72325C	$2.00	1½ Story Braced Rafter Dairy Barn
72325D	$2.00	2-Story Gothic Roof Stanchion Dairy Barn
72325E	$2.00	2-Story Bent Gothic Roof Dairy Barn
72341	75¢	Calf Barn
72350	$1.00	Dairy Layout, 100 Free Stalls
72351	$1.25	Confined Dairy Layout, 100 Free Stalls

Framing & Utility Buildings

72008A	25¢	Braced Rafters for 32′ Barn Width
72008B	25¢	" " " 34′ " "
72008C	25¢	" " " 36′ " "
72044	75¢	24′ Wide Frame Utility Building
72045	75¢	30′ " " " "
72046	$1.00	36′ " " " "
72047	75¢	40′ " " " "
72054	75¢	24′ Wide Pole Utility Building
72055	75¢	30′ " " " "
72056	$1.00	36′ " " " "
72057	75¢	40′ " " " "
72058	$1.00	50′ " " " "
72074	75¢	24′ Wide Masonry Utility Building
72075	75¢	30′ " " " "
72077	75¢	40′ " " " "

Milking Plants

75241	75¢	4-Stall Chute Type Farm Milking Plant
75242	$1.00	Single Row, Side Opening Stalls
75243	75¢	U-Type, Side Opening Stalls
75244	75¢	Double Row, Walk-Thru Stalls
75245	75¢	" " , Side Opening Stalls
75246	$1.00	Herringbone Milking Plant
75262	75¢	Bulk Milkhouses, 100-240 Gal/Day
75263	75¢	" " , 50-340 "
75264	75¢	" " , 260-430 "
85100	25¢	Farm Milking Plant Waste Disposal

Hay Storage

73103	50¢	50 Ton Self-Feeding Haykeeper
73104	50¢	24′ Wide Pole Hay Shed
73105	50¢	30′ " " " "
73106	50¢	36′ " " " "
73107	50¢	40′ " " " "
73108	50¢	48′ " " " "

Crop Storage

73217	$1.00	Small Feed Bins
73292	$2.00	Grain-Feed Handling Center, Work Tower Across Drive, Equal Sheds
73293	$2.00	Grain-Feed Handling Center, Work Tower Across Drive, One-Way Shed
73294	$2.00	Grain-Feed Handling Center, Work Tower Beside Drive, Offset Gable

BOOKS

$1.00 each

MWPS-6	Beef Housing and Equipment Handbook
MWPS-8	Swine Housing and Equipment
MWPS-9	Designs for Glued Trusses
MWPS-10	Designs for Split Ring Trusses
MWPS-11	Designs for Nailed Trusses
MWPS-12	Outdoor Living Planning and Construction
MWPS-13	Planning Grain-Feed Handling
MWPS-14	Private Water Systems

71204	Contemporary Farmhouses	$4.95

DIGESTS

Free—1 to 9 copies **(total order)**

AED-1	Anerobic Manure Lagoons
AED-4	Nomograph for Swine Environment Calculations
AED-6	Gluing Wood
AED-7	Grain Bin Floors and Foundations
AED-8	Handling Liquid Manure
AED-9	Paints and Painting
AED-11	Handling Swine Manure
AED-12	Remodeling Corn Cribs for Small Grain Storage
AED-13	Insulation and Heat Loss
AED-14	Oxidation Ditch for Treating Hog Wastes
AED-15	Horizontal Silo Construction

To Order

See inside front cover.

Send for a complete catalog from one of the universities listed inside the front cover. FREE.

DAIRY

HOUSING AND EQUIPMENT

HANDBOOK