University of Nebraska - Lincoln
DigitalCommons@University of Nebraska - Lincoln

Historical Materials from University of Nebraska-Lincoln Extension

Extension

1972

# EC72-731 Swine Handbook : Housing and Equipment

Follow this and additional works at: http://digitalcommons.unl.edu/extensionhist

"EC72-731 Swine Handbook : Housing and Equipment" (1972). *Historical Materials from University of Nebraska-Lincoln Extension*. 4157.
http://digitalcommons.unl.edu/extensionhist/4157

This Article is brought to you for free and open access by the Extension at DigitalCommons@University of Nebraska - Lincoln. It has been accepted for inclusion in Historical Materials from University of Nebraska-Lincoln Extension by an authorized administrator of DigitalCommons@University of Nebraska - Lincoln.

MWPS-8

AGRI
S
85
E7
#72-731
c.1

EC-72-731

E.C. 72-731

# SWINE HANDBOOK

## HOUSING & EQUIPMENT

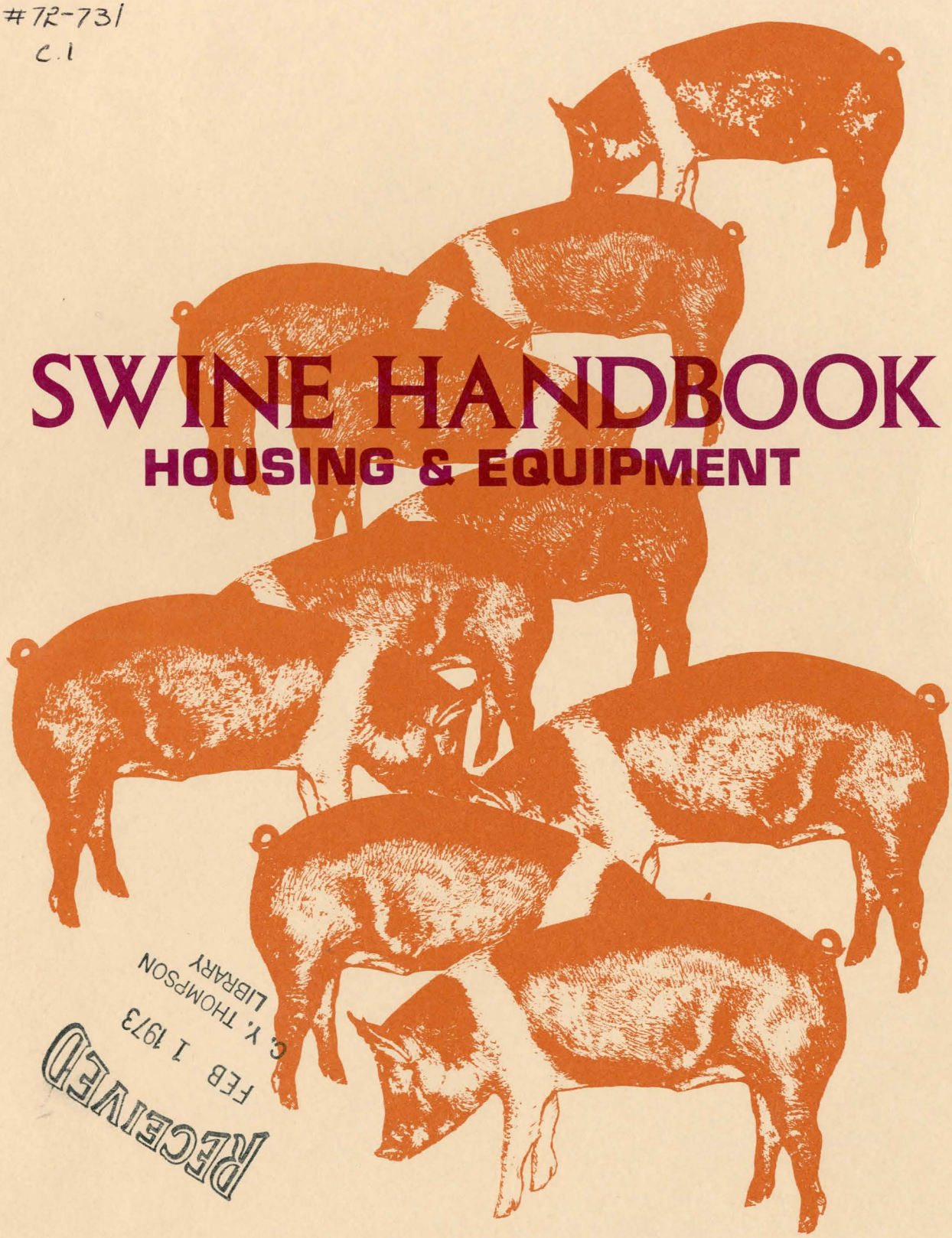

RECEIVED
FEB 1 1973
C. Y. THOMPSON
LIBRARY

EXTENSION SERVICE
UNIVERSITY OF NEBRASKA COLLEGE OF AGRICULTURE
COOPERATING WITH THE U.S. DEPARTMENT OF AGRICULTURE
AND THE COLLEGE OF HOME ECONOMICS
E.F. FROLIK, DEAN J.L. ADAMS, DIRECTOR

The Midwest Plan Service prepares publications under the direction of agricultural engineers and consulting specialists. It is an official activity of thirteen Land-Grant Universities and the U.S. Department of Agriculture. The following are cooperating members:

**University of Alaska**
**College, Alaska 99735**

**University of Illinois**
**Urbana, Illinois 61801**

**Purdue University**
**Lafayette, Indiana 47907**

**Iowa State University**
**Ames, Iowa 50010**

**Kansas State University**
**Manhattan, Kansas 66502**

**Michigan State University**
**East Lansing, Michigan 48823**

**University of Minnesota**
**St. Paul, Minnesota 55101**

**University of Missouri**
**Columbia, Missouri 65201**

**University of Nebraska**
**Lincoln, Nebraska 68503**

**North Dakota State University**
**Fargo, North Dakota 58102**

**Ohio State University**
**Columbus, Ohio 43210**

**South Dakota State University**
**Brookings, South Dakota 57006**

**University of Wisconsin**
**Madison, Wisconsin 53706**

**For additional copies of this book or other publications referred to, write:**

**EXTENSION AGRICULTURAL ENGINEER**

**at any of the above institutions.**

This book was prepared under the direction of the Swine Housing Subcommittee of the Midwest Plan Service:

L. Lubinus, Agricultural Engineering Department, South Dakota State University, Brookings, Chairman.

J.A. DeShazer, Agricultural Engineering Department, University of Nebraska, Lincoln,

R.M. George, Agricultural Engineering Department, University of Missouri, Columbia,

L.D. Van Fossen, Agricultural Engineering Department, Iowa State University, Ames,

J.H. Pedersen, ex-officio, Manager, Midwest Plan Service.

MWPS-8
First Edition 40M, '64-'68
Second Edition 39M, '68-'72

Third Edition
1st Printing 15M, Jul '72

**$2.00**

*Copyright © 1972, Midwest Plan Service*
*Iowa State University, Ames, Iowa 50010*
*Rights negotiable, injuiry invited*

# CONTENTS


**PRODUCTION ALTERNATIVES** ..... 3
Product To Be Marketed
Farrowing pigs for sale as feeder pigs
Farrowing pigs for sale as market pigs
Buying and finishing feeder pigs
Pasture vs Confinement ..... 4
Building Location
Building Systems
One-stage production ..... 5
Two-stage production
Three-stage production
Others

**BUILDING SELECTION** ..... 6
Farrowing
Farrowing buildings
Stalls and Pens
Floors ..... 7
Sow Wash ..... 8
Selecting a layout
Growing ..... 12
Space and facilities
Selecting a floor plan
Finishing ..... 13
Space and facilities
Selecting a layout
Gestating Sow Housing ..... 16
Open shelter housing
Confinement sow housing ..... 17
Pasture Production ..... 18

**VENTILATION** ..... 19
Insulation
Vapor Barrier ..... 20
Fans
Construction features
Speed ..... 21
Capacity
Location
Air Inlets and Outlets
Slot inlets ..... 22
Duct inlets
Manure pit outlets
Summer inlets ..... 24
Ventilation Systems
Exhaust systems
Pressure systems
Individual blower
Ventilation control & wiring systems ..... 26
Emergency control systems ..... 27
Heating ..... 28
Brooder lamps
Underfloor hot air heat ..... 29
Underfloor cable or pipe heat
Cooling ..... 31
Evaporative cooling
Spray cooling
Buildings Kept Cold In Winter
Openings ..... 32
Snow and wind control

**WASTE DISPOSAL**
Introduction ..... 33
Characteristics of Manure
Solid Manure Handling
Liquid Manure Handling
Gases from stored liquid manure ..... 34
Storage ..... 35
Disposal of liquid manure ..... 37
Runoff Control—Open Lots ..... 38
Settling Basin (or debris basin) ..... 39
Holding pond
Disposal area
Slat and Gutter Construction ..... 40
Walls for storage tanks ..... 41
Floor framing
Shallow manure pit designs ..... 42
Drain for manure gutter

**FENCING**
Corner and End Posts ..... 43
Fence Dimensions ..... 44
Tilt-Up Concrete Fence
Windbreak Planning ..... 45
Windbreak Fences ..... 46
Plank Fence Splices
Gates ..... 47
Hinges
Latches
Stock Guards ..... 48

**HANDLING EQUIPMENT**
Handling Pens ..... 49
Pig and Sow Sorter
Hog Sorting Creep
Layout for Individual Sow Breeding
Sorting Chutes, Wood ..... 50
Sorting Chutes, Pipe ..... 51
Breeding Rack ..... 52
Farrowing Stalls ..... 53

Farrowing Stall ..... 54
Farrowing-Growing Pen
Farrowing Crate ..... 55
Sow & Litter Crate
Shipping Crate ..... 56
Ringing Crate
Weighing Crate ..... 57
Fork Lift
Loading Chutes ..... 58
Trailer ..... 61

**FEEDING**
Permanent Stalls ..... 62
Portable Stalls ..... 63
Finishing Feeders ..... 64
Walk-In Self-Feeder ..... 66
Fenceline Feeders ..... 68
Creep Fence ..... 69
Mineral Feeder
Feed Cart ..... 70
Concrete Trough
Barrel Feeder
Waterer ..... 71
Barrel Waterer
Sun Shades ..... 72
Auger Installations ..... 74
Wallows ..... 75

**MATERIALS** ..... 76
Wood
Wood Preservatives
Hardboard
Plywood
Paint
Sheet Metal ..... 77
Masonry
Concrete

**FASTENERS** ..... 80
Nails
Wood Screws ..... 81
Glue

**WEIGHTS AND MEASURES** ..... 83

**INDEX**

**SUMMARY OF DESIGN DATA** ..... 84

This handbook summarizes what agricultural engineering can offer swine producers. It deals with the design and operation of the buildings and equipment necessary for a profitable swine business. Animal science, economics, and related subjects are mentioned only as they affect an engineering problem.

• As you consider alternatives, allow for:

**Expansion,** perhaps to twice the production you are now planning.

**Your Neighbors,** who may object to noise, odor, and dust from your business.

**Regulations,** which may dictate or limit building locations and waste disposal methods.

• Some decisions to be made early are:

**Product To Be Marketed**
Feeder pigs
Market weight hogs
Breeding stock

**Pasture vs Confinement**

**Building System**

# PRODUCTION ALTERNATIVES

## PRODUCT TO BE MARKETED

### Farrowing Pigs For Sale As Feeder Pigs

A well designed farrowing system needs good farrowing facilities and expert management. A multiple-litter farrowing schedule will supply the most pigs with a given investment in buildings and equipment. Confinement housing is recommended to provide necessary environmental controls. Feeder pig production is recommended when:

- available space is limited, but expansion is desired.
- feed supplies for finishing pigs are unavailable or costly.
- labor is available, but capital is limited.
- a regular income with low investment is desired.
- there is local demand for feeder pigs.

### Farrowing Pigs For Sale As Market Hogs

Good farrowing facilities are needed here too. In addition, and especially when a large number of pigs will be produced, separate facilities for each age group are recommended, for better disease and environmental control and waste handling. The number and size of facilities depends on:

- number of sows to be farrowed and the farrowing schedule.
- management system used—pasture, confinement, or combination.
- number of pigs desired.
- number of pigs purchased as feeder pigs.
- climate of the area.

### Buying and Finishing Feeder Pigs

This system of production does not require farrowing facilities, and is recommended when:

- caring for baby pigs is not desired.
- labor is limited, and finishing feeds are available.
- there is a reliable source of feeder pigs.

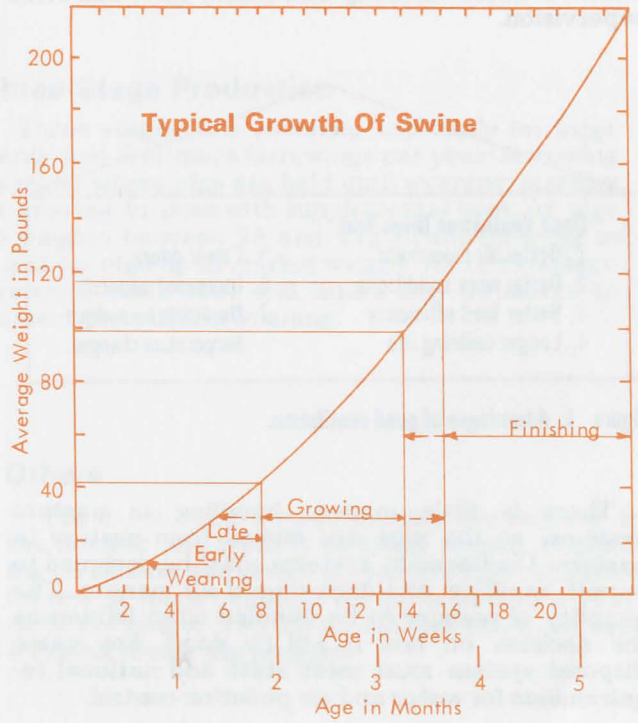

## PASTURE VS CONFINEMENT

Pasture management is most practical for operators who:

- want to feed out pigs with minimum building investment.
- have pasture available for proper rotation for disease control.
- are tenants.
- farrow once or twice a year.
- farrow up to about 80 sows per year.

Partial or total confinement systems are recommended when:

- top level management is available.
- a multiple-litter farrowing schedule is used.
- large numbers of hogs will be raised.
- labor and available space is limited.
- capital is available.

Producers raise hogs in confinement:

- to cut labor and chore time with mechanical feeding and watering.
- to increase efficiency with better control of feed, diseases and other management practices.
- to provide better year-round working conditions for themselves.
- to reduce animal use of high value land.

Protect pigs on pasture from high temperatures with sun shades, waterers, sprinklers, and wallows. The hogs need shelter during cold weather where they can group together for warmth.

Producers using confinement housing can more easily moderate and stabilize temperatures, and control certain infectious diseases and parasites.

Control temperatures with ventilating fans, heaters, insulation, and in hot weather, sprinklers (Fig. 1). Infectious diseases and parasites can often be controlled by isolation from other pigs and livestock, fumigation and other sanitation procedures, effective waste handling and health care, and close supervision.

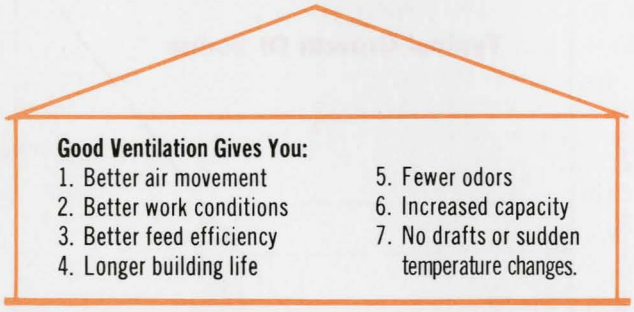


**Figure 1. Advantages of good ventilation.**

There is little manure handling in pasture systems, as the pigs are moved from pasture to pasture. Confinement systems must be designed to permit handling and disposing of all manure. The quantity of manure to be handled often influences the decision on how it will be done. Any waste disposal system must meet state and national requirements for water and air pollution control.

## BUILDING LOCATION

Consider the following factors:

- **Drainage.** Drainage should be away from the farm home and other buildings. Pasture or feedlot drainage should not enter waterways leading to streams or lakes.
- **Future plans for expansion.** Always leave room for more buildings to be located properly with respect to feed storages and roads.
- **Snow, sun, and wind.** Some production systems require snow control for best efficiency. Locate facilities downwind from residences to minimize odor problems.
- **Feeding and marketing access.** Plan for the necessary movement of the operator, animals, and equipment.
- **Accessibility of water and electric lines.**

## BUILDING SYSTEMS

Figure 2 illustrates animal movement through a sequence of production steps. It shows that a building doesn't work alone, but is one part of a system. Figure 3 illustrates some of the buildings that support pork production systems.

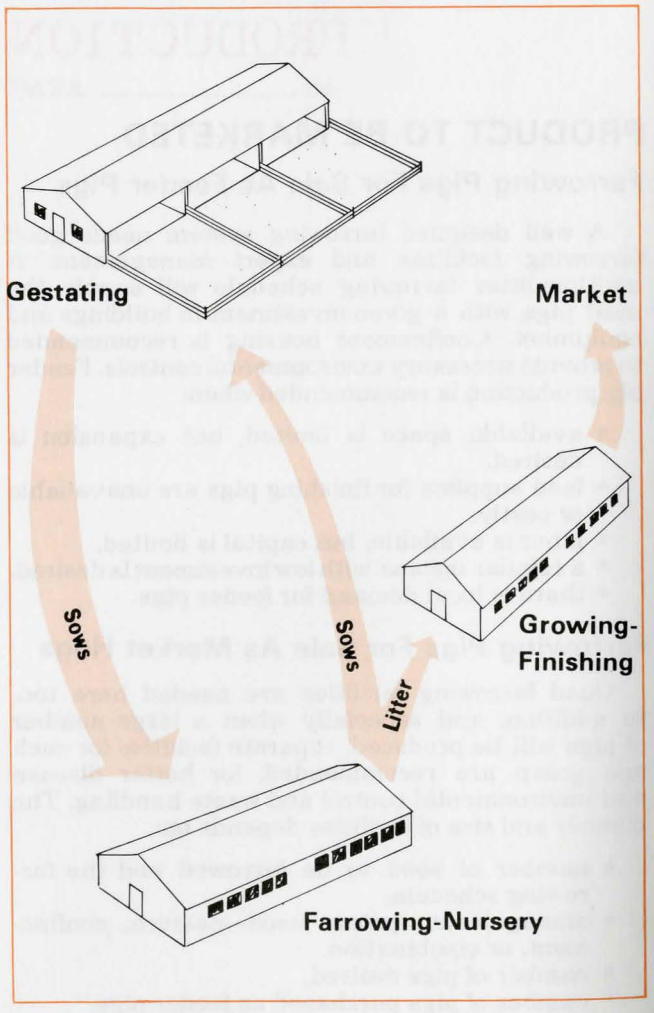


**Figure 2. A building system.**

Figure 3. Building systems for hog production.

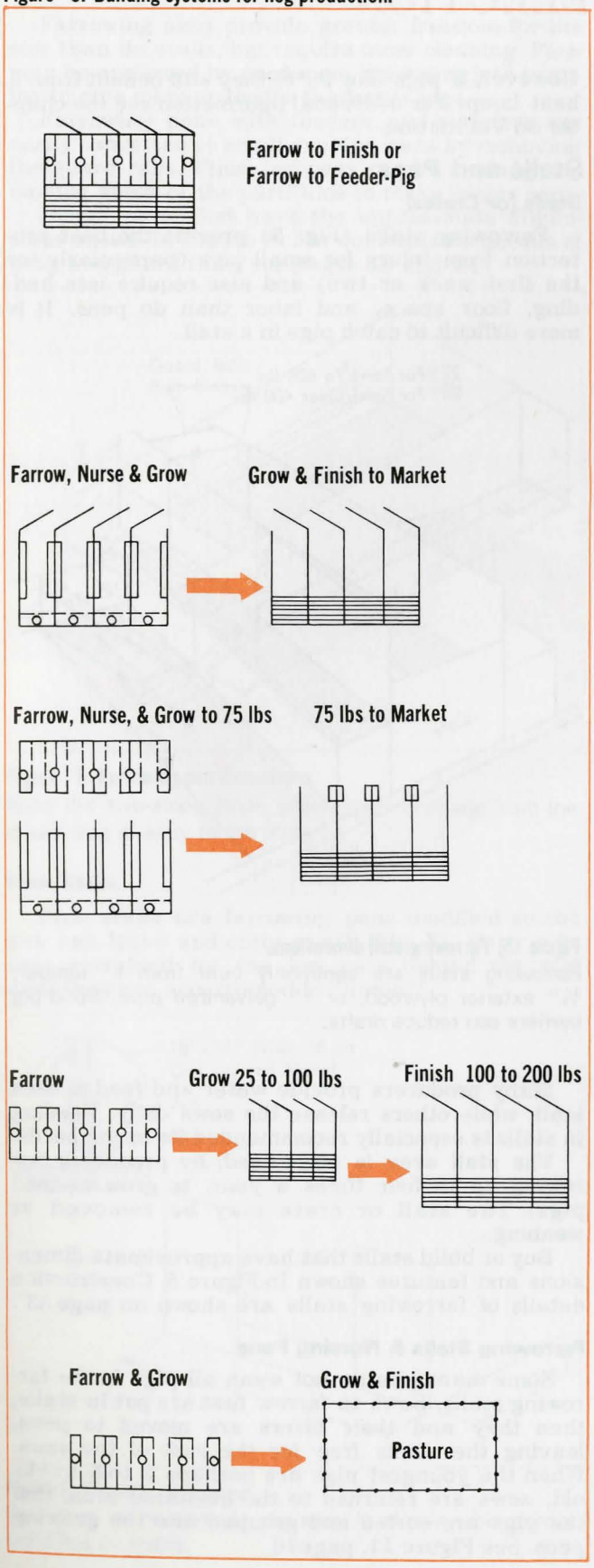


## One-Stage Production

Farrow-to-finish production all in one pen has been tried, but is no longer common, partially because slower pigs in each group stay in the building too long, and there is not adequate clean-up time before the next farrowing. Space is not used efficiently. Further, the greater expense justified in a farrowing facility is not needed for a finishing facility.

Feeder pig production is commonly a one-stage system, with pigs sold from the pens in which they were farrowed. About 4 litters a year can be raised to 40 to 60 lb in a single pen.

## Two-Stage Production

If pigs are farrowed, nursed, weaned and started in one pen to about 60 lbs and 12 weeks of age, they can be moved to a finishing unit for the next 12 weeks. About 4 litters a year can be raised this way. Some producers farrow 3 times per year—skipping a mid-winter litter and spreading the other 3 out a little, leaving more time for slower pigs to reach 220 lbs. Or, there may be farrowing stalls or pens for about half the sow herd, with nursery pens for the other half. Half of the sows are put into the stalls for farrowing. Sows with the largest pigs are moved to a nursery pen when the stalls are needed for another farrowing. The second "shift" of sows and litters stays in the stalls until weaning. About 2 litters are grouped into each nursery pen, often after sorting by weight and vigor.

## Three-Stage Production

Three stages are common, especially for large herds and 6 or more farrowings per year: farrowing in stalls where pigs are held until weaning; starting or growing in pens with supplemental heat, for pigs to weights between 75 and 125 lb; and finishing in a unit for pigs up to market weight. As in two-stage systems, some sows and litters may be moved to nursery pens before weaning.

## Others

The 1-, 2-, and 3-stage systems above refer to the number and types of buildings needed. Depending on climate and program, pasture may substitute for one or more buildings for all or part of a year. And, the stages may be on different farms, as with a typical feeder-pig program.

# BUILDING SELECTION

## FARROWING

### Typical Farrowing Schedules

- **One Litter Per Year.** Gilts are farrowed once a year in warm weather, often on pasture. The investment in buildings and equipment can be very small, but the cost is charged to only one group of sows and litters.
- **Two Litters Per Year.** One group of sows is farrowed twice a year. If one of the farrowings is in cold weather, more investment in buildings and equipment is justified; overhead is prorated to twice as many litters.
- **Multiple Litters Per Year.** Two or more groups of sows are each farrowed twice a year. Confinement facilities are helpful for this schedule; facilities are charged to many pigs, so the cost per pig may be the lowest of all possible schedules.

### Farrowing Buildings

Farrowing in an enclosed building allows the manager to control the environment within the building. Baby pigs must be kept warm, dry, and free from cold drafts. A new-born pig needs an environment of about 90°F, then is content with about a 2° drop per day to 70°F. The sow, on the other hand, is most comfortable at about 60°F. To obtain these two temperatures at the same time, provide supplemental heat in the creep area. Creep heaters may be lamps, gas heaters, electric heating cable or hot water pipe in the floor, or some combination.

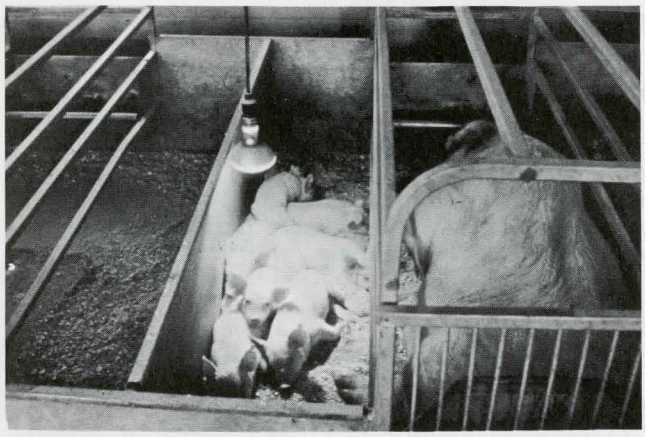

**Figure 4. Supplemental heat in creep area.**

Provide supplemental heat for at least the first week after birth, and longer if the building temperature would fall below 60°F. Some producers with farrowing stalls on slotted floors use no supplemental heat, but heat the entire building to 80°F. However, if pigs like 90°F, they still benefit from a heat lamp. For additional information see the chapter on Ventilation.

### Stalls and Pens

#### Stalls (or Crates)

Farrowing stalls (Fig. 5) provide the best protection from injury for small pigs (particularly for the first week or two) and also require less bedding, floor space, and labor than do pens. It is more difficult to catch pigs in a stall.

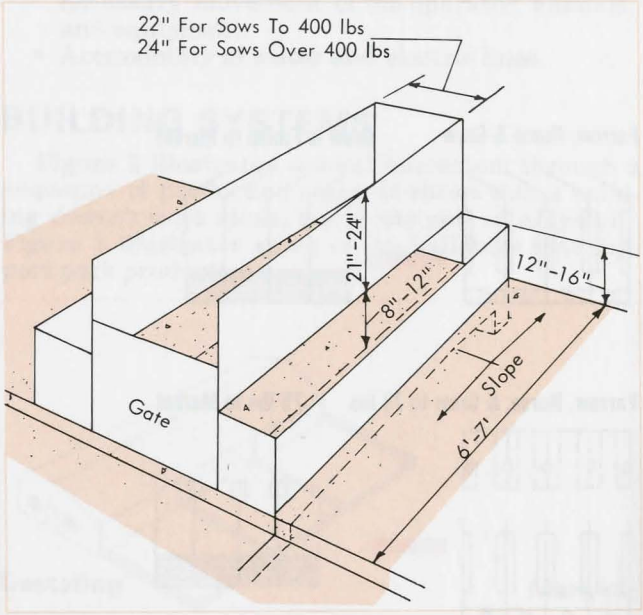


**Figure 5. Farrowing stall dimensions.**
Farrowing stalls are commonly built from 1" lumber, ¾" exterior plywood, or 1" galvanized pipe. Solid pig barriers can reduce drafts.

Many producers provide water and feed in each stall, while others release the sows daily. Feeding in stalls is especially recommended for larger herds.

The stall area is often used, by producers farrowing up to four times a year, to grow weaned pigs. The stall or crate may be removed at weaning.

Buy or build stalls that have approximate dimensions and features shown in Figure 5. Construction details of farrowing stalls are shown on page 53 .

#### Farrowing Stalls & Nursing Pens

Some managers do not wean all pigs in the farrowing stalls. Sows to farrow first are put in stalls, then they and their litters are moved to pens, leaving the stalls free for the rest of the sows. When the youngest pigs are perhaps 3 to 5 weeks old, sows are returned to the gestation area, and the pigs are sorted and grouped into the growing pens. See Figure 11, page 10.

### Pens

Farrowing pens provide greater freedom for the sow than do stalls, but require more cleaning. Pens may be preferred by producers practicing late weaning to give more space for the larger pigs.

Farrowing pens with feeders and waterers are easily converted to small growing pens by removing the guard rails. Finishing pens can be made by removing some of the partitions to make larger pens.

Install pens that have the approximate dimensions shown in Figure 6. For construction details of pens and guard rails, see pages 53 and 54.

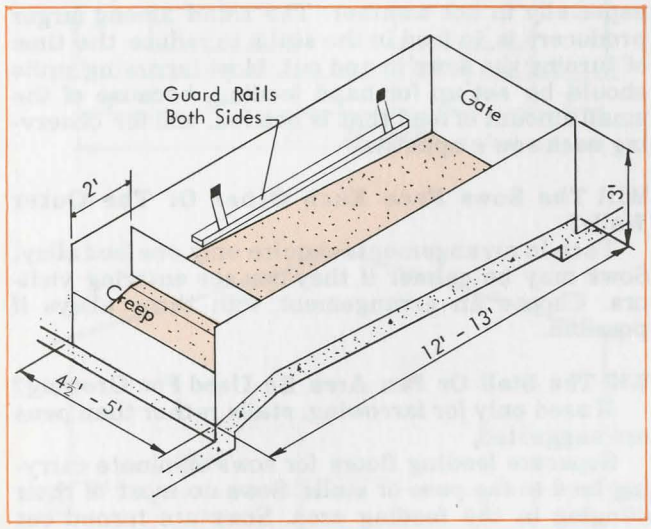


**Figure 6. Farrowing pen dimensions.**
Note the two-slope floor, which gives drainage from the creep area directly to the alley.

### Free Stalls

Free stalls are farrowing pens modified so the sow can leave and enter at will (Fig. 7). Baby pigs are restrained by the low gate behind the sow until they are accustomed to "home."

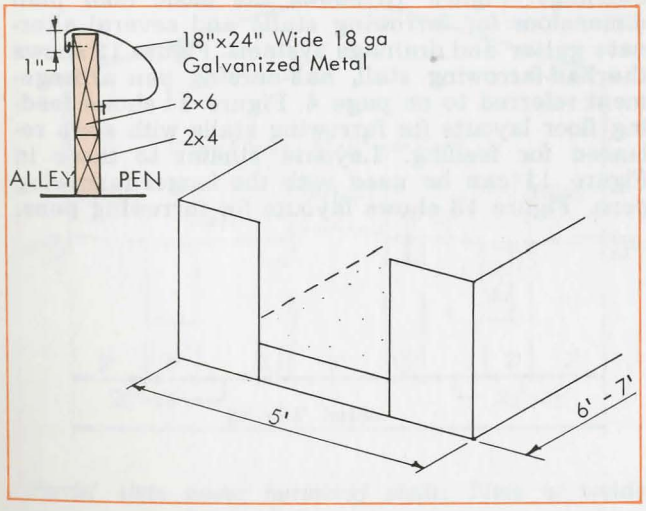


**Figure 7. Free stall dimensions.**
One type of homemade pig stop is shown; commercial units are available.

**The advantages of free stalls relative to farrowing stalls are:**

- Labor saving in turning sows out to eat.
- Labor saving in cleaning individual pens.
- Less investment in feeders and waterers.
- Cleaner pens.
- Most sows are more relaxed.

**The disadvantages are:**

- A sow may go out and in up to 15 times a day and usually lays down each time she enters the pen.
- If a sow does not want to nurse her litter she leaves the pen.
- Some sows carry bedding to the alley to make a farrowing nest.
- Sows leave pens quickly if there is any draft.
- If a few pigs get out, it is difficult to return them to the right pen unless they are marked.
- A sow can lie with her head through the door; pigs can crawl up on her and escape.
- If feeding space is limited, the sows may have to be fed in small groups.
- Some producers limit feeding the sows for up to 5 days to help control scours in baby pigs; so sows must be fed in the stalls.
- If the gate at the back of the pen is too high, an old sow with low slung udder is susceptible to mastitis.

Free-stall farrowing may be satisfactory:

- If the stall or pen is the most comfortable place for the sows.
- For the relatively small producer.
- With sows feeding in groups of 10 or fewer.
- If the farrowing area has flat floors, because sows dung outside the stalls.
- With indoor feeding, to eliminate frozen wastes and drafts from sow doors.

## Floors

### Slotted Floors

Slotted floors help keep floor cleaning to a minimum, especially if sows are fed in the stall or pen (Fig. 8).

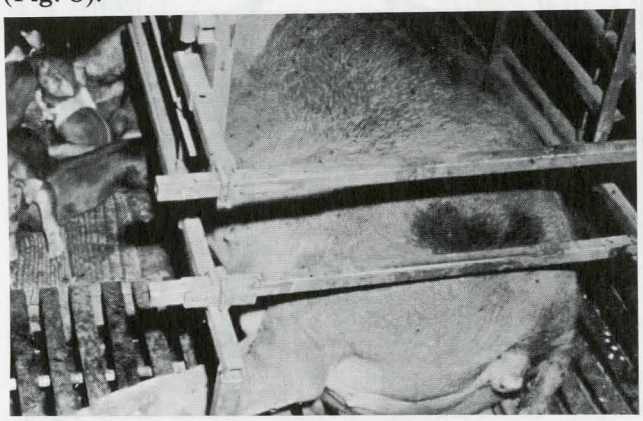

**Figure 8. Farrowing on a partially slotted floor.**

Manure under slotted floors must be handled as a liquid. Part of the floor may be left solid for electric or hot water floor heat. Floor or space heat, rather than bedding, is recommended with liquid manure handling.

Space slats either a uniform 3/8" apart, or 3/4"-1" apart. Spaces between 3/8" and 3/4" are not recommended because pigs' legs may get caught. Space slats 1" apart behind the sow to improve cleaning. Cover any spacing over 3/8" during, and for 3 days after, farrowing. An opening about 2" by 4" behind the sow will aid cleaning.

Designs for slats are detailed on page 40 and floor heating is described on pages 29 to 30.

**Solid Floors**

Slope solid floors to alleys and drains. A two-slope floor is recommended if waterers are installed in the stall or pen. See Figures 6 and 10.

**Alley Slopes**

- 1/2"/ft cross slope to form a crown.
- 1/4"/ft to drains.

**Floor Slopes**

- Flat with slotted floors.
- 1/2" - 3/4"/ft, without bedding.
- 1/4" - 1/2"/ft, with bedding.

**Alley Widths**

- Feeding alley, 4' for feed cart.
- Sow handling alley, 3'.
- Remodeling, as little as 2' for feeding or sow handling alley.

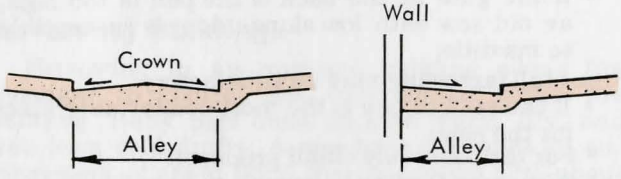


## Sow Wash

Install a sow wash near one entrance to the building for washing sows before farrowing.

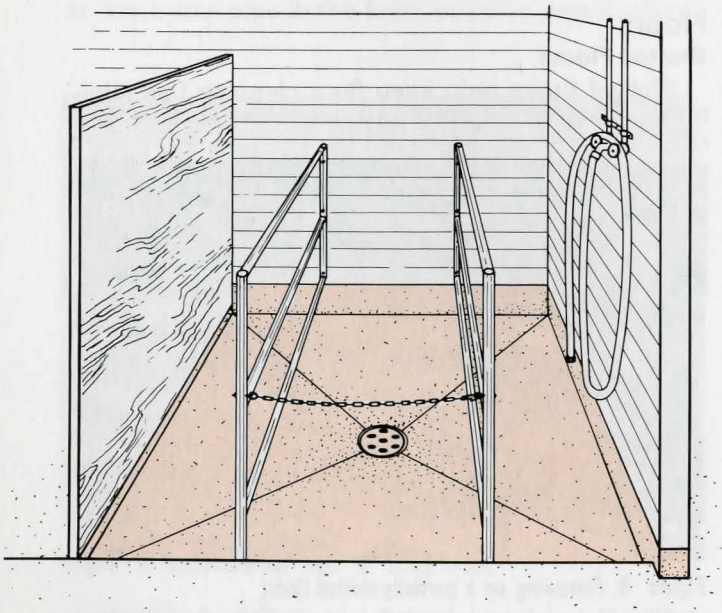

**Figure 9. Sow wash pen.**
Provide hot and cold water and slope the floor ¼" - ½"/ft to a drain.

## Selecting a Layout

**Will Manure Be Handled as A Solid Or A Liquid?**

The relatively small amount of wastes from a farrowing house do not justify getting special handling equipment. If other wastes on the farm are handled as liquids, and if capital can be invested to replace labor, consider slats and liquid handling of farrowing house wastes, especially for large herds.

**Will The Sows Be Fed In Or Away From The Stalls Or Pens?**

Odor from a feeding floor may be a problem, especially in hot weather. The trend among larger producers is to feed in the stalls to reduce the time of turning the sows in and out. Most farrowing units should be set up for hand feeding, because of the small amount of feed that is needed, and for observing each sow's appetite.

**Will The Sows Face Each Other Or The Outer Walls?**

Face-in arrangements require only one feed alley. Sows may be calmer if they can see entering visitors. Choose an arrangement with three alleys if possible.

**Will The Stall Or Pen Area Be Used For Growing?**

If used only for farrowing, stalls rather than pens are suggested.

Separate feeding floors for sows eliminate carrying feed to the pens or stalls. Sows do most of their dunging in the feeding area. Sows are turned out each day to the feeding floor.

Provide about 2' of feeder space for each sow if all are fed at the same time. One foot of space is satisfactory if sows have free access to the feeder. Clean the feeding area about every third day in cold and mild weather. During hot weather, clean often to prevent sows from lying in the manure.

**Building Layouts**

Figures 10 to 13 illustrate layouts for farrowing buildings. Figure 10 shows the basic floor plan dimensions for farrowing stalls and several alternate gutter and drainage systems. Figure 12 shows the half-farrowing stall, half-nursing pen arrangement referred to on page 4. Figure 11 shows feeding floor layouts for farrowing stalls with sows released for feeding. Layouts similar to those in Figure 11 can be used with the longer farrowing pens. Figure 13 shows layouts for farrowing pens.

**Figure 10. Buildings with farrowing stalls.**

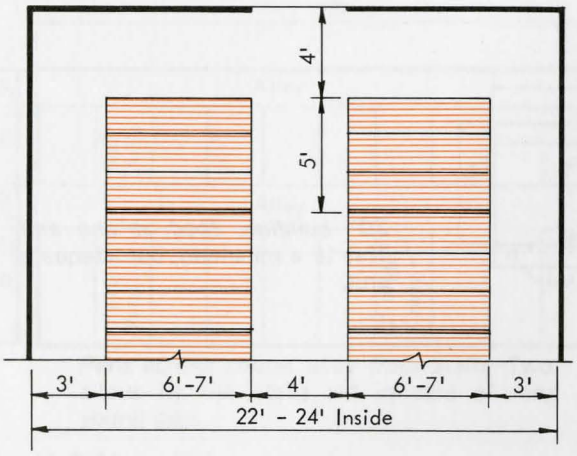


Note that solid floors slope to pits or gutters. Three alleys are suggested if sows are to be fed in the stalls, and for new farrowing houses. Sows commonly face in for easier feeding. Slats or partial slats are more easily justified with inside feeding.

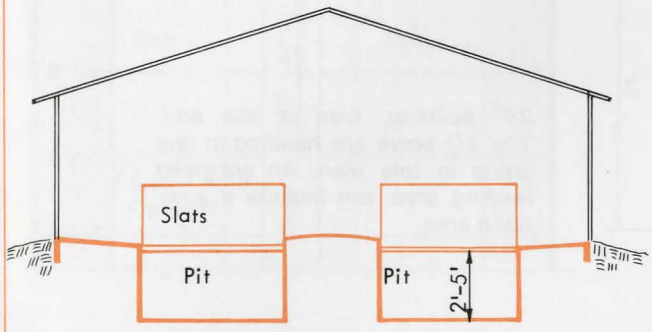


*Full slats under farrowing stalls.* The pit will store wastes for about 60 days per foot of depth.

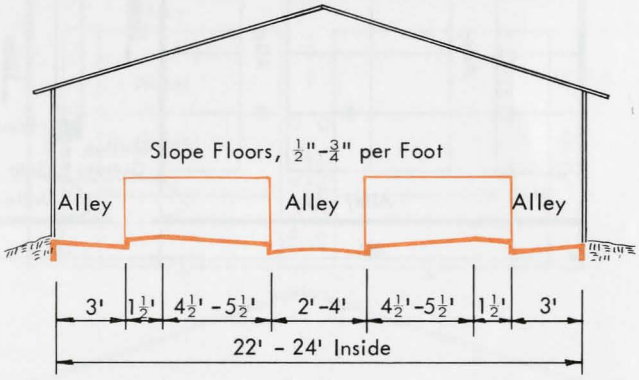


*Two-slope solid floor.* Even if sows are fed in the stalls, the greater cleaning needed on solid floors suggests facing the sows out. Outside alleys may be omitted if sows are not fed in the stalls; consider possible future feeding programs.

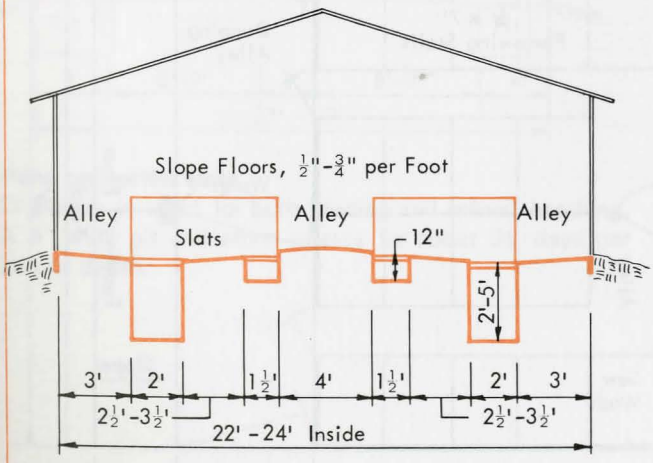


*Partial slats under farrowing stalls.* Slats or welded mesh in the front of the stalls helps keep small pigs clean, and drains spilled water. The pits will hold wastes for about 18 days per foot of depth.

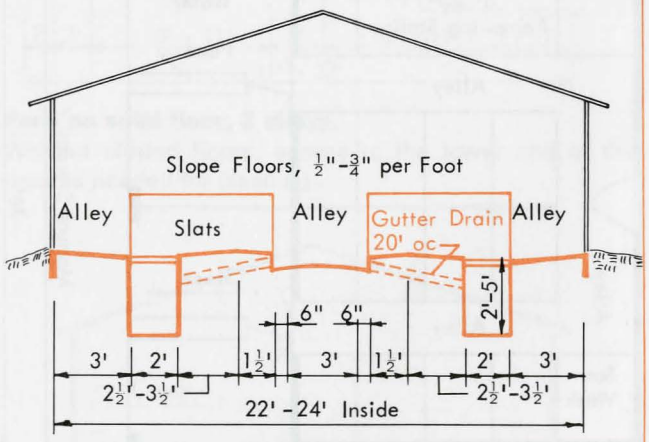


*Partial slats and alley gutters.* A small gutter in the alley does not need slats or a grill, but the alley must be wide enough for feedcart wheels to stay out of the gutter. Drain alley to pits about 20' o.c.

**Figure 11. Buildings with farrowing stalls and feeding floors.**

See two-stage production, page 5.

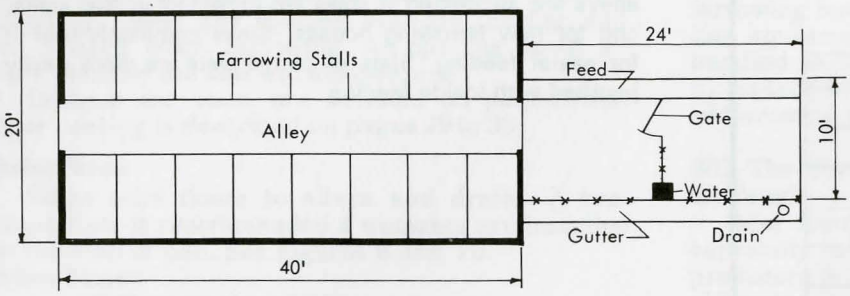


*20' building, feed at one end.* This is a minimum, but adequate, unit.

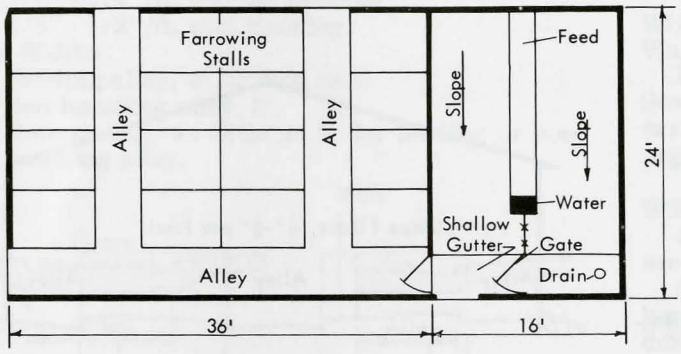


*24' building, feed at one end.* The 20 sows are handled in one group in this plan. An enclosed feeding area can include a sow-wash area.

**A single alley behind the sow is enough if the sows are fed away from the stalls. A covered feeding floor is desirable.**

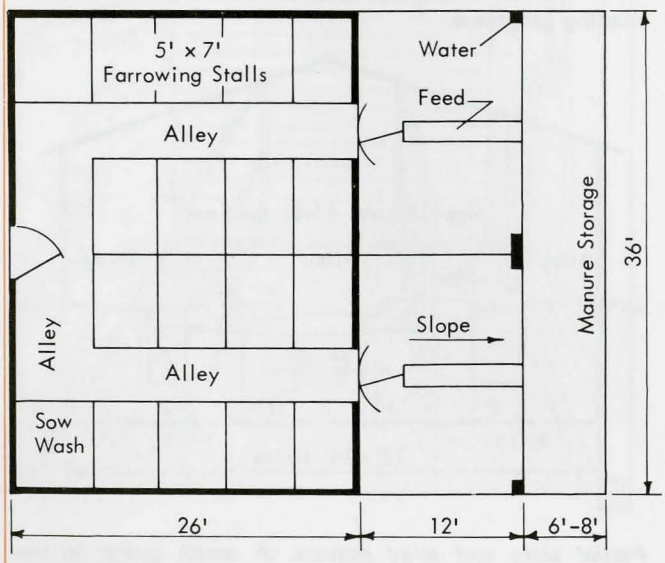


*26' building, hand cleaning.* The plan provides for feeding sows in two groups. With older litters, pigs can be fed outdoors.

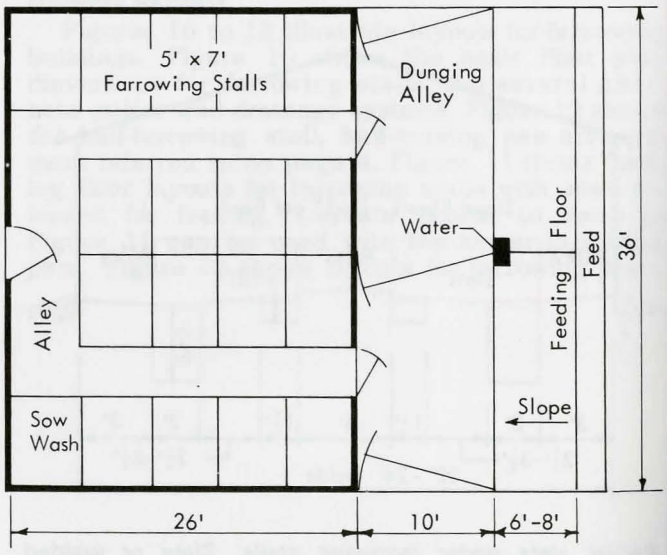


*26' building, tractor cleaning.* Gate arrangement and feeder location permit tractor scraping of the dunging alley. Sow herd may be divided.

**Figure 12. Buildings with farrowing stalls and nursing pens.**

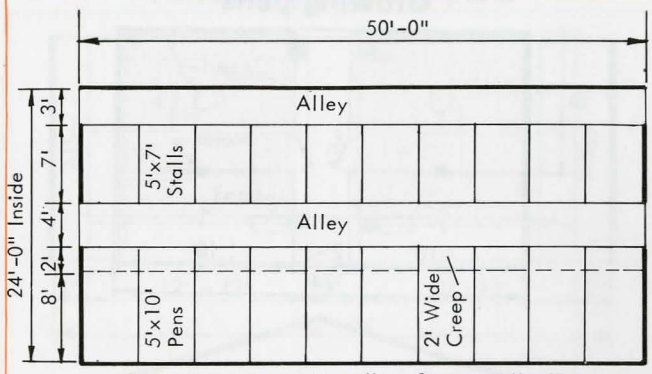


*Pens across center alley from stalls.* Two alleys by the stalls aid in care of very young pigs.

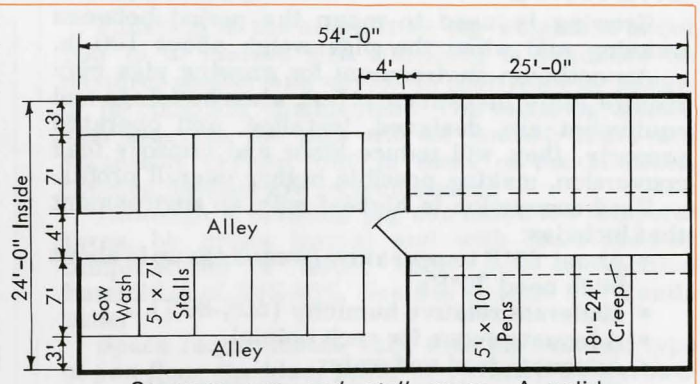


*Separate pen and stall areas.* A solid partition between the stall and pen areas may aid disease control.

**Figure 13. Buildings with farrowing pens.**

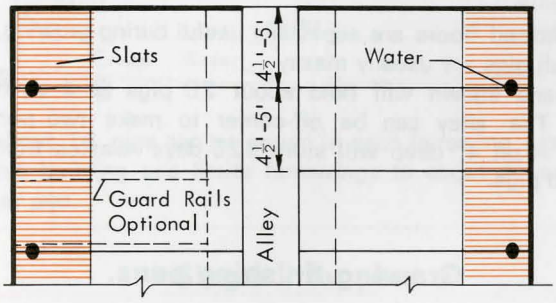


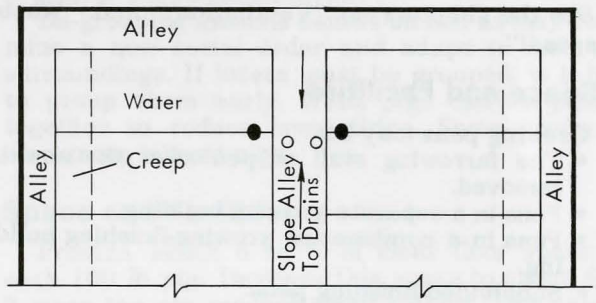


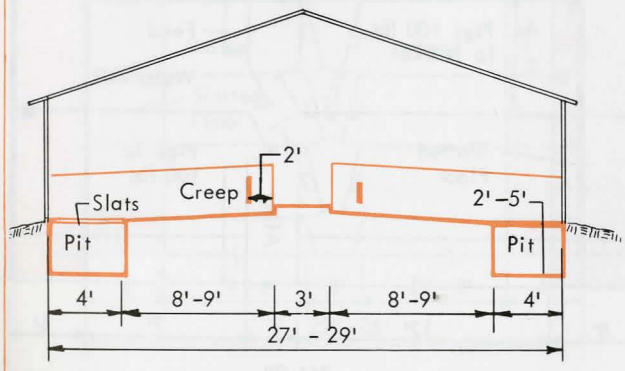


**Pens on partial slats.**
One alley is used for both feeding and animal handling. A 4' wide pit will store wastes for about 36 days per foot of depth.

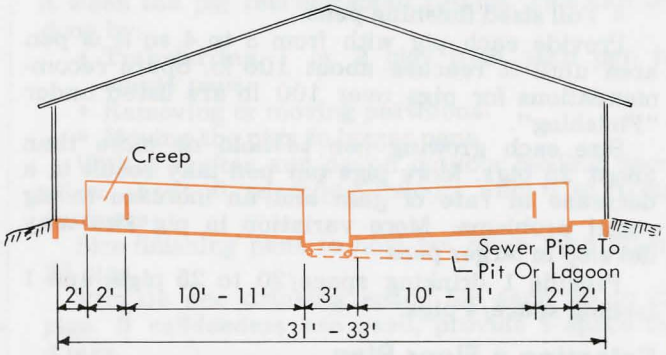


**Pens on solid floor, 3 alleys.**
Without slotted floors, access to the lower end of the pens is needed for cleaning.

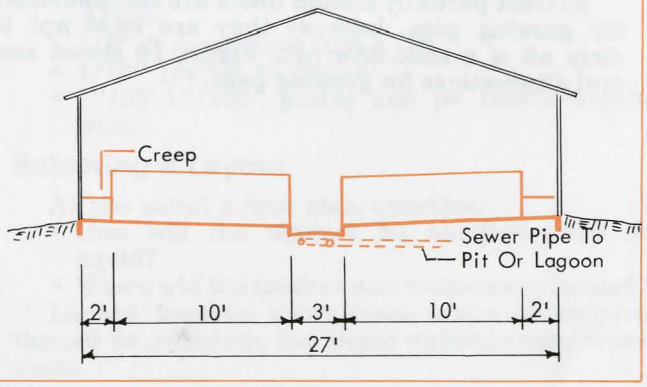


**Pens on solid floor, narrow building.**
For remodeling, two rows of these pens fit in a 28'-wide building, if ceiling height permits alleys to be over the creeps.

## GROWING

Growing is used to mean the period between weaning and when the pigs weigh about 100 lb.

An optimum environment for growing pigs may require large investments. But, when buildings and equipment are designed, installed, and operated properly, they will reduce labor and improve feed conversion, making possible higher overall profits.

Feed conversion is highest with an environment that includes:

- About 60°F temperature (weanlings up to about 60 lb need 70°F).
- Moderate relative humidity (50%-80%).
- Adequate space for each animal.
- Adequate feed and water.
- Effective sanitation and waste disposal.

Provide sufficient ventilation and heat. Install space heaters in the building, and/or install individual heaters for the resting area for small pigs in cold weather: heat lamps, radiant heaters, or underfloor electric cable or hot water pipe.

See the chapters on "Ventilation" and "Waste Disposal".

### Space and Facilities

Growing pens may be:

- The farrowing stall or pen after the sow is removed.
- Pens in a separate growing building.
- Pens in a combination growing-finishing building.
- Subdivided finishing pens.
- Full sized finishing pens.

Provide each pig with from 3 to 4 sq ft of pen area until it reaches about 100 lb. Space recommendations for pigs over 100 lb are listed under "Finishing".

Size each growing pen to hold no more than about 25 pigs. More pigs per pen may result in a decrease in rate of gain and an increase in pig social problems. More variation in pig size may develop in larger pens.

Provide 1 drinking space/20 to 25 pigs, and 1 feeding space/4 pigs.

### Selecting a Floor Plan

As you design or select a floor plan, consider:

- Where and how the pigs will be fed?
- How will the manure be handled—as a solid or a liquid?

At least partially slotted floors are recommended for growing pigs, because they are most apt to dirty all of a solid-floor pen. Figure 14 shows several alternatives for growing pens.

**Figure 14. Pen arrangements for growing pigs.**

**Growing pens**

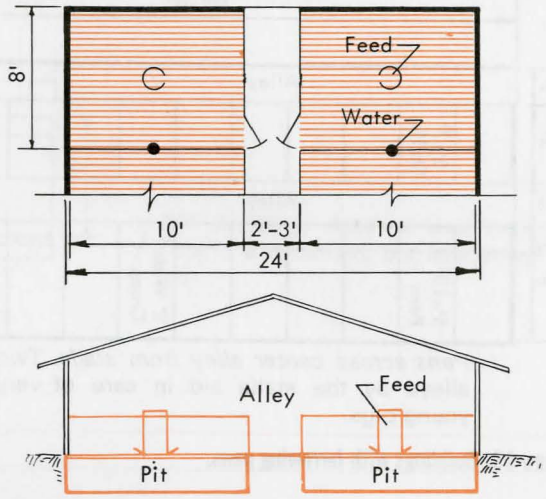


Fully slotted floors are especially useful during growing, as small pigs are usually messy.

The pens shown will hold about 20 pigs @ 4 sq ft each. The alley can be off-center to make two pen sizes. A pit 4' deep will store 120 days' wastes from 100-lb pigs.

**Growing-finishing pens.**

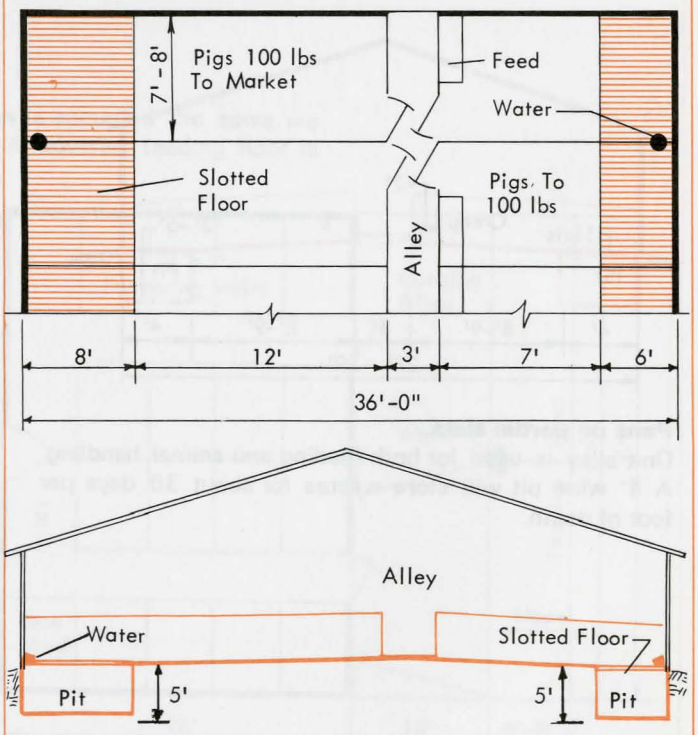


With pen gates arranged as shown, pigs can move directly across the alley to finishing pens. Pits will store wastes for about 120 days under the growing pens, and about 70 days under the finishing pens.

### Farrowing-growing pens

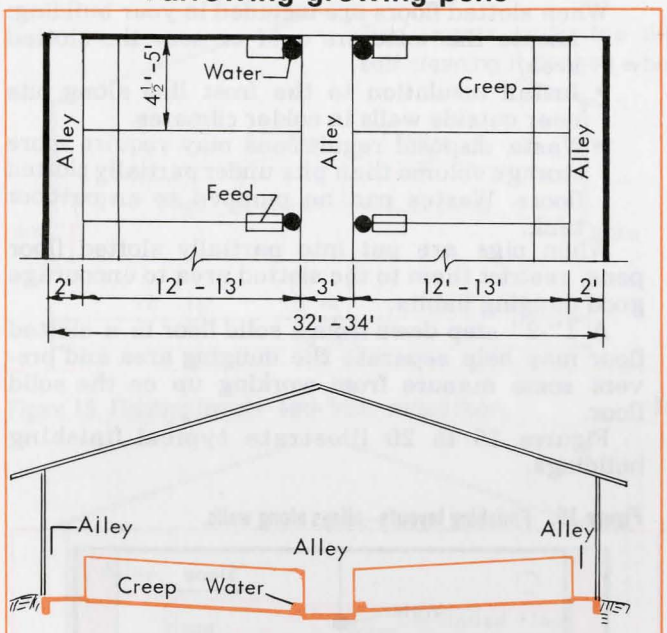


About 16 pigs can be grown in each farrowing pen, but this building use limits farrowings to about 4 per year per pen.

### Single litter pens

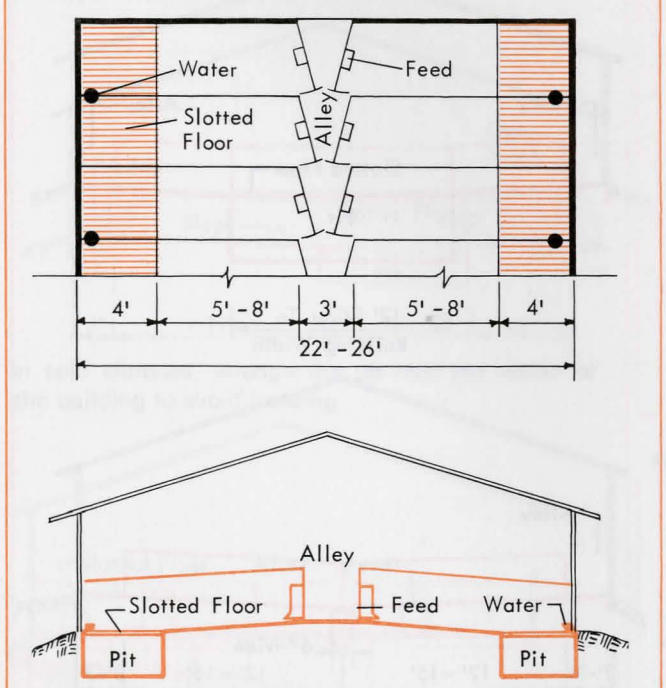


The long narrow pens are sized for about 10 pigs. Sorting by weight and age into small groups can aid uniform growth. Pits 4' deep will store wastes for about 60 days.

## FINISHING

Finishing is the stage from pig weights of about 100 lb to market size. Finishing is practiced on pasture, shelter and drylot, in open front buildings, or in complete confinement. The following discussion assumes the pigs will be housed; there are successful drylots, but in most of the Midwest, covered feedlots are recommended.

Although a finishing pig can stand low temperatures, he grows fastest and with least feed at temperatures of about 55°F and at relative humidities of 50%-80%. See the chapter on "Ventilation".

Space requirements vary with pig size and type of pen floor (bedded, solid, or slotted). Overcrowding tends to increase tail-biting and cannibalism, and may decrease rates of gain. A larger number of animals per pen, especially if at minimum space per pig, has an effect similar to overcrowding. More space than recommended has not improved the rate of gain or pig social behavior.

Re-grouping animals causes stress, as they determine a new social order and adapt to their new surroundings. If litters must be grouped, it is best to group them early. Weak pigs can be penned together to reduce competition. Some producers also group injured pigs.

### Space and Facilities

Provide about 6 sq ft of clear floor space for each 100 lb pig. Increase this space to about 8 sq ft when the pig reaches about 150 lbs. This can be done by:

- Transferring 1 or 2 pigs from each pen to empty pens.
- Removing or moving partitions.
- Moving the pigs to larger pens.

With a shelter and paved outdoor feeding floor, allow about 6 sq ft/pig indoors and 6 sq ft/pig outdoors.

Size finishing pens to hold not more than about 25 pigs.

Provide one drinking space for each 20 to 25 pigs. If self-feeders are used, provide 1 space for 4 pigs.

Slope floor areas to help with manure handling and cleanliness:

- 1/2" - 1"/ft, solid floors.
- 1"/ft, outside feeding floors.
- Usually flat, slotted floors.

Alleys:

- 1/2"/ft cross slope crown.
- 1/10"-1/4"/ft, to drains.
- 1"/25'-1"/100', gutter and pit floors, lengthwise.

### Selecting a Layout

As you select a floor plan, consider:

- How will the manure be handled—solid or liquid?
- Where will the feeders and waterers be located?

Locate feeders away from areas of manure deposit or collection, but locate waterers near these areas.

**Figure 15. Finishing layouts—center alley, slotted floors.**

Building length depends on the number of pigs to be finished. At 8 sq ft/pig, each 4'x16' pen holds 8 pigs, and each 10'x16' pen holds 20 pigs.

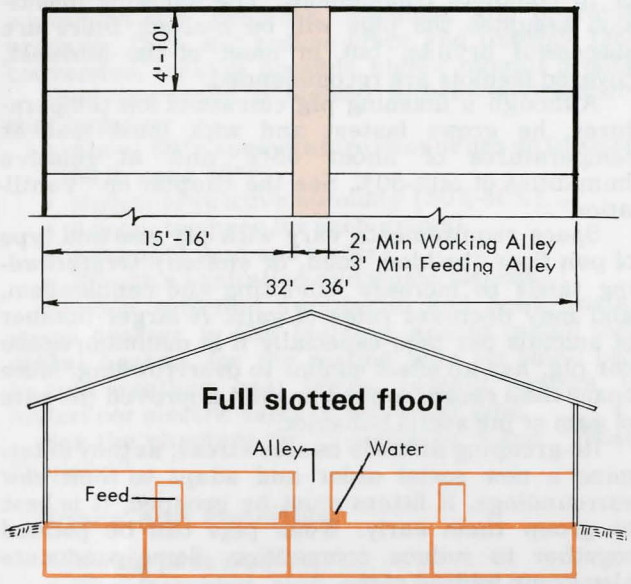


Pen size and arrangement are very flexible. Hand cleaning is minimized, and manure storage capacity is relatively high—about 140 days in 4' deep pits.

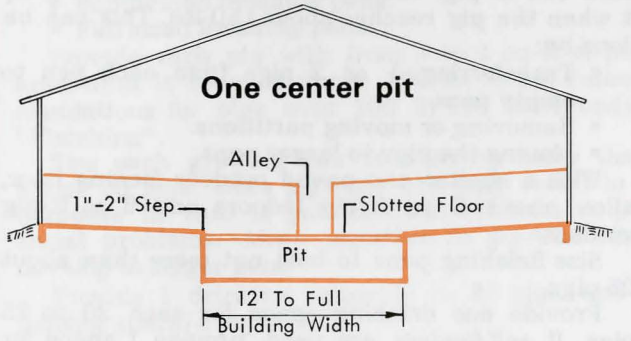


A central pit is less apt to freeze and should be cheaper than two side pits but provides access only at the ends for agitating and pumping. The alley is slotted to save making two pits only 2'-3' apart. A central pit is easier to install than side pits in an existing building with good footings.

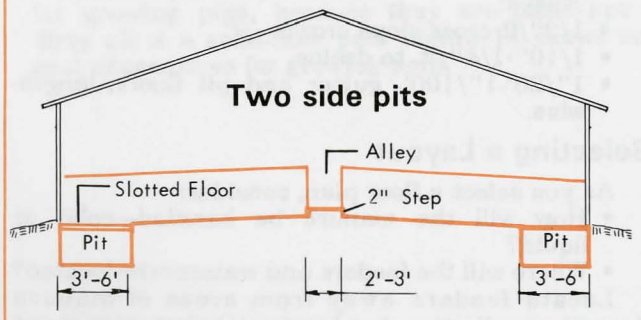


In cold climates, insulate to the frost line along outside pit walls. Pit will hold about 60 days' wastes.

When slotted floors are included in your building:

- Locate the waterers over or near the slotted area.
- Install insulation to the frost line along pits near outside walls in colder climates.
- Waste disposal regulations may require more storage volume than pits under partially slotted floors. Wastes can be pumped to an outdoor tank.

When pigs are put into partially slotted floor pens, restrict them to the slotted area to encourage good dunging habits.

A 1"-2" step down from a solid floor to a slotted floor may help separate the dunging area and prevent some manure from working up on the solid floor.

Figures 15 to 20 illustrate typical finishing buildings.

**Figure 16. Finishing layouts—alleys along walls.**

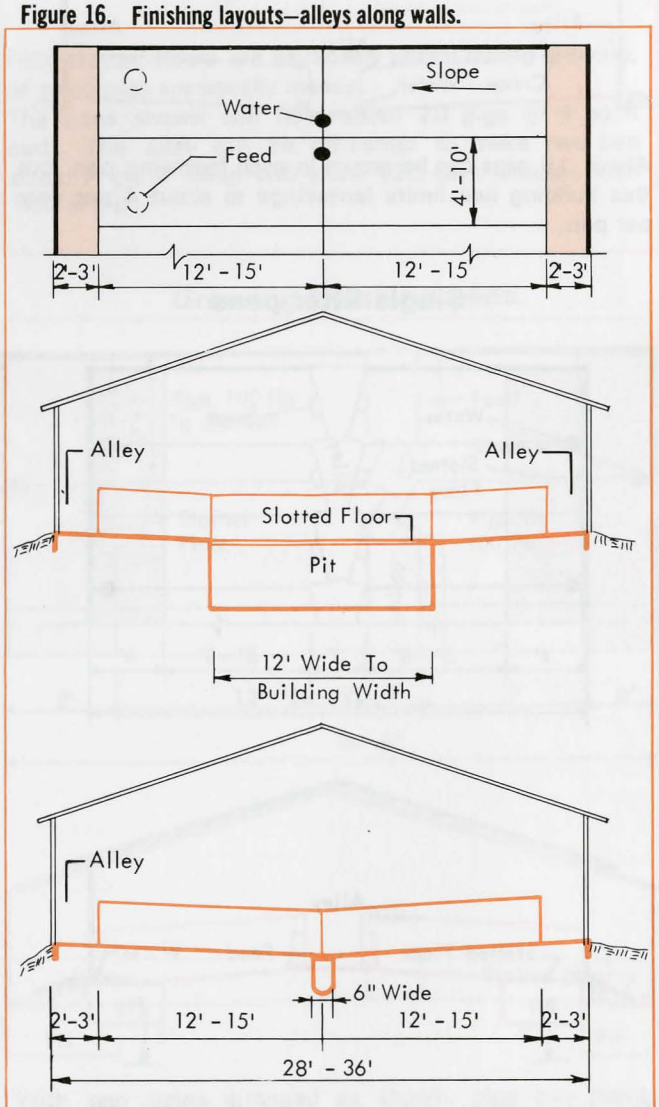


Two side alleys require more building space than one central alley. Pens may be different widths, or the middle divider can be off-center.

**Figure 17. Finishing layouts—narrow gutter.**

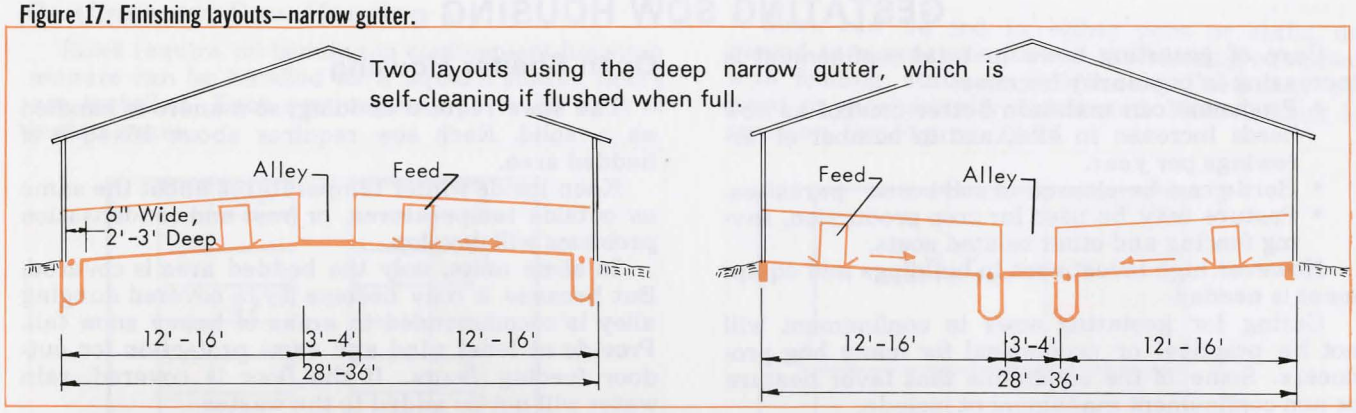


Two layouts using the deep narrow gutter, which is self-cleaning if flushed when full.

**Figure 18. Finishing layouts—open front, slotted floors.**

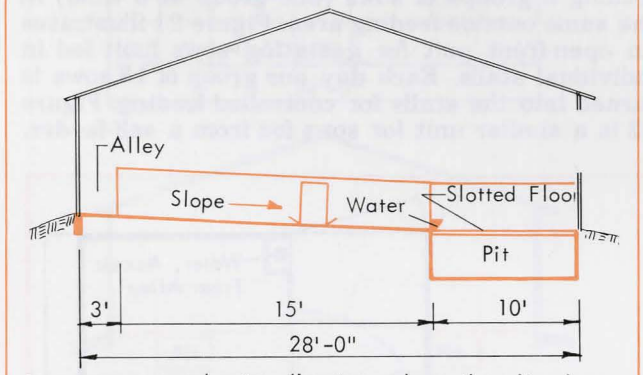


In warm or moderate climates, place the pits along the open wall for maximum winter sun exposure.

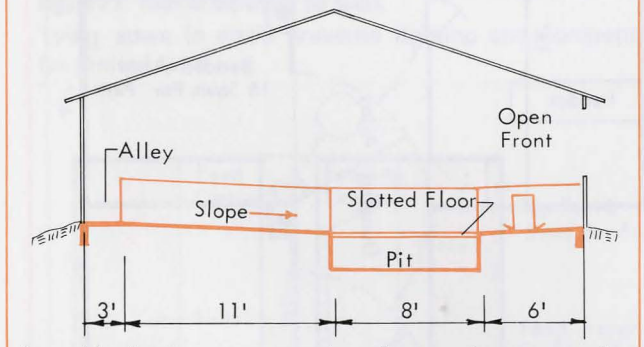


In cold climates, arrange the pit near the center of the building to avoid freezing.

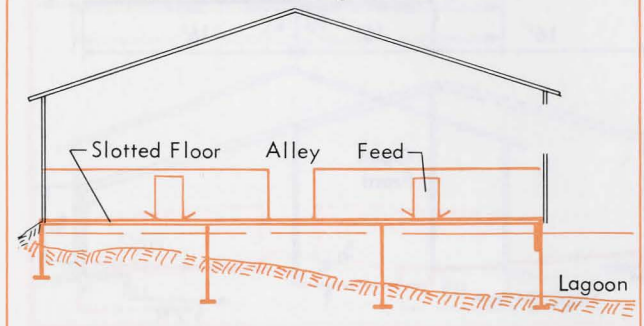


In warm climates where the lagoon will be active all year, a fully slotted floor finishing building can be over the edge of a lagoon. Floors will be drafty in cool weather.

**Figure 19. Finishing layouts—open front, solid floors.**

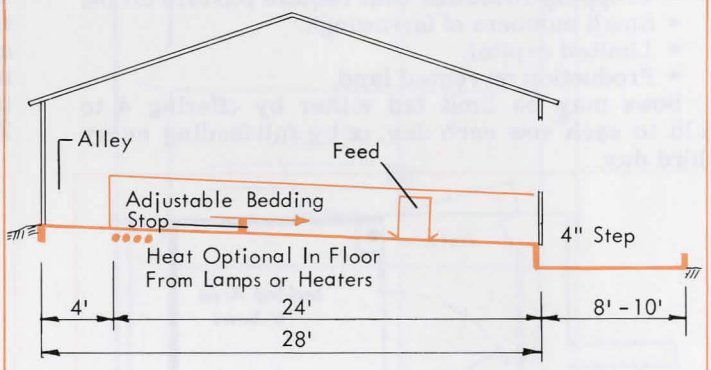


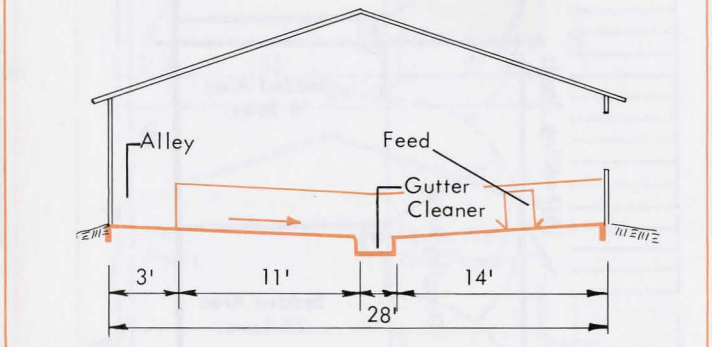


Bedding can be used on solid floors. Adding heat in the floor or with brooders is optional. These two layouts assume hand cleaning.

**Figure 20. Finishing layout—open front, outdoor lot.**

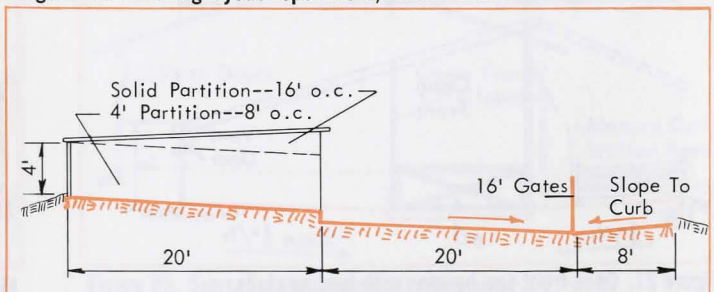


An open lot adds to cleaning and runnoff control problems. Some units use floor heat both indoors and out for comfort and to avoid snow accumulation.

# GESTATING SOW HOUSING

Care of gestating sows in total confinement is increasing in popularity because:

- Producers can maintain better control as sow herds increase in size, and in number of farrowings per year.
- Herds can be cleared of soil-borne parasites.
- Pasture may be used for crop production, saving fencing and other related costs.

However, high investment in buildings and equipment is needed.

Caring for gestating sows in confinement will not be practical or economical for many hog producers. Some of the conditions that favor pasture or non-confinement management include:

- Using marginal land not useful for crops.
- Cropping rotations that require pasture crops.
- Small numbers of farrowings.
- Limited capital.
- Production on rented land.

Sows may be limit fed either by offering 4 to 5 lb to each sow each day, or by full-feeding every third day.

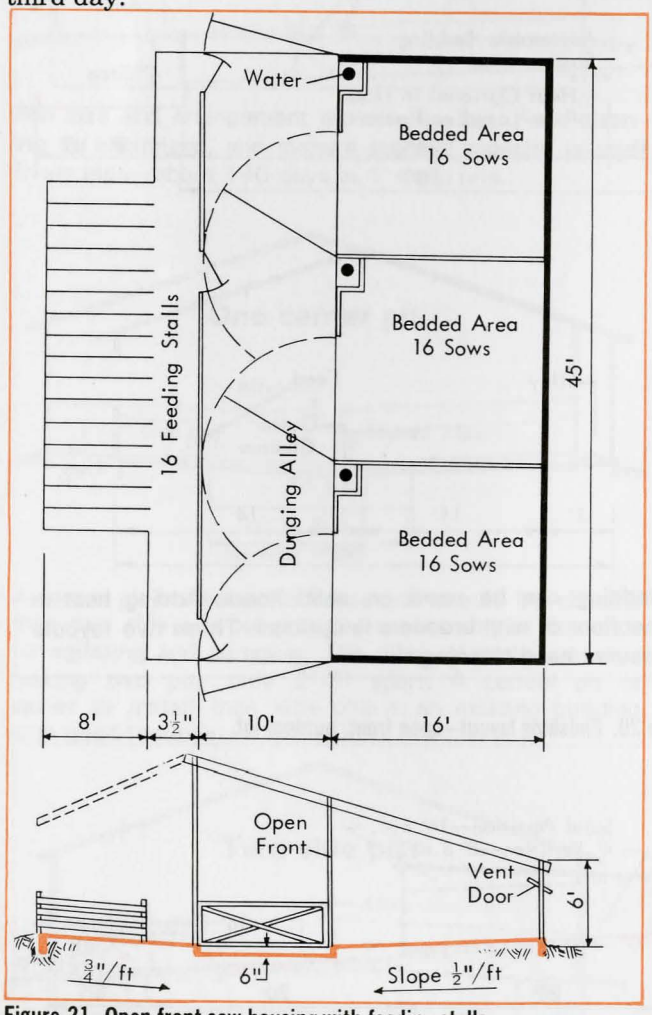


**Figure 21. Open-front sow housing with feeding stalls.**

Each pen of sows eats every third day. The dunging alley is arranged for tractor cleaning. A roof over the dunging and feeding areas is desirable.

## Open Shelter Housing

The sows require bedding, so manure is handled as a solid. Each sow requires about 15 sq ft of bedded area.

Keep inside winter temperatures about the same as outside temperatures, or frost and condensation problems will develop.

In some units, only the bedded area is covered. But because it may become icy, a covered dunging alley is recommended in areas of heavy snow fall. Provide at least wind and snow protection for outdoor feeding floors. If the floor is covered, rain water will not be added to the wastes.

Figures 21 and 22 show layouts suitable for feeding 3 groups of sows (one group at a time) in the same outside feeding area. Figure 21 illustrates an open-front unit for gestating sows limit fed in individual stalls. Each day one group of 16 sows is turned into the stalls for controlled feeding. Figure 22 is a similar unit for sows fed from a self-feeder.

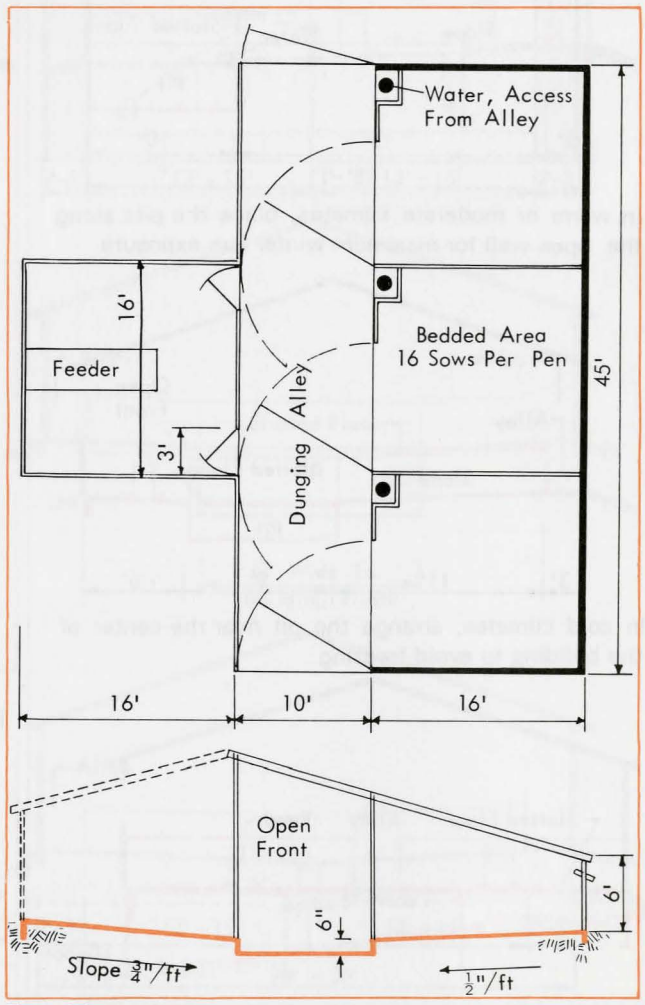


**Figure 22. Open-front sow housing with self-feeder.**

A layout similar to Figure 21 arranged for a self-feeder instead of individual feeding stalls.

## Confinement Sow Housing

Sows require no bedding in confinement housing; manure can be handled as a liquid if slotted floors are installed. Each sow requires 15 to 20 sq ft of building area.

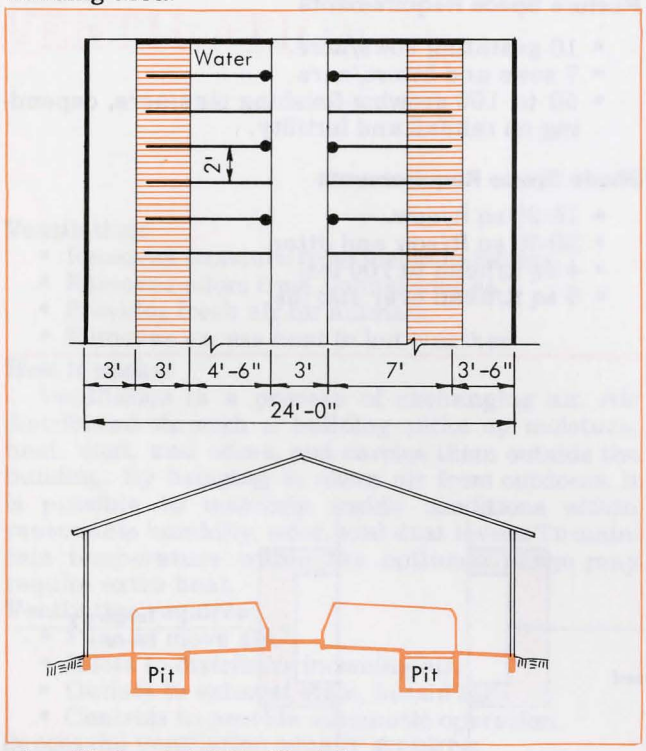


**Figure 23. Sows in individual tie stalls.**

Tying sows in stalls prevents fighting and competition for limited feed.

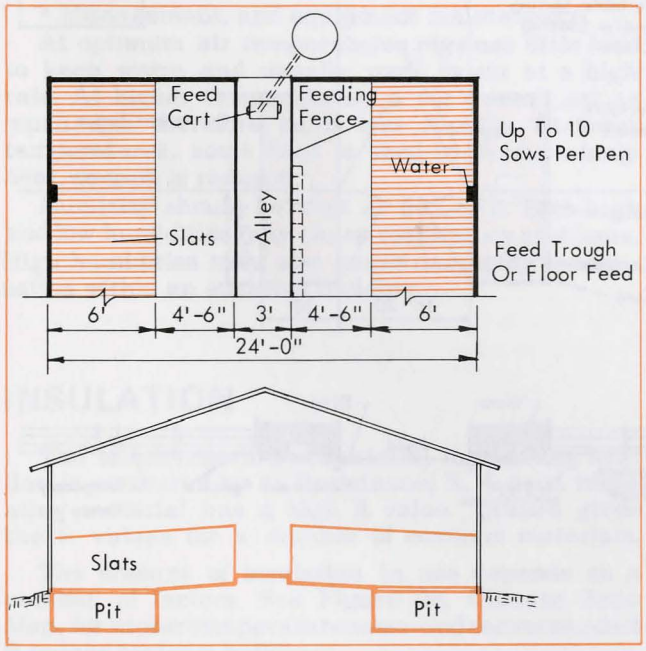


**Figure 24. Sows fed in the pen.**

Sows in group pens can be fed on the floor or in feeders.

Sows can be fed in either pens or stalls, or moved to a separate part of the building equipped with feeding stalls or self-feeders. Feed may be hand or mechanically distributed. Floor feeding is common. See Figures 23-25.

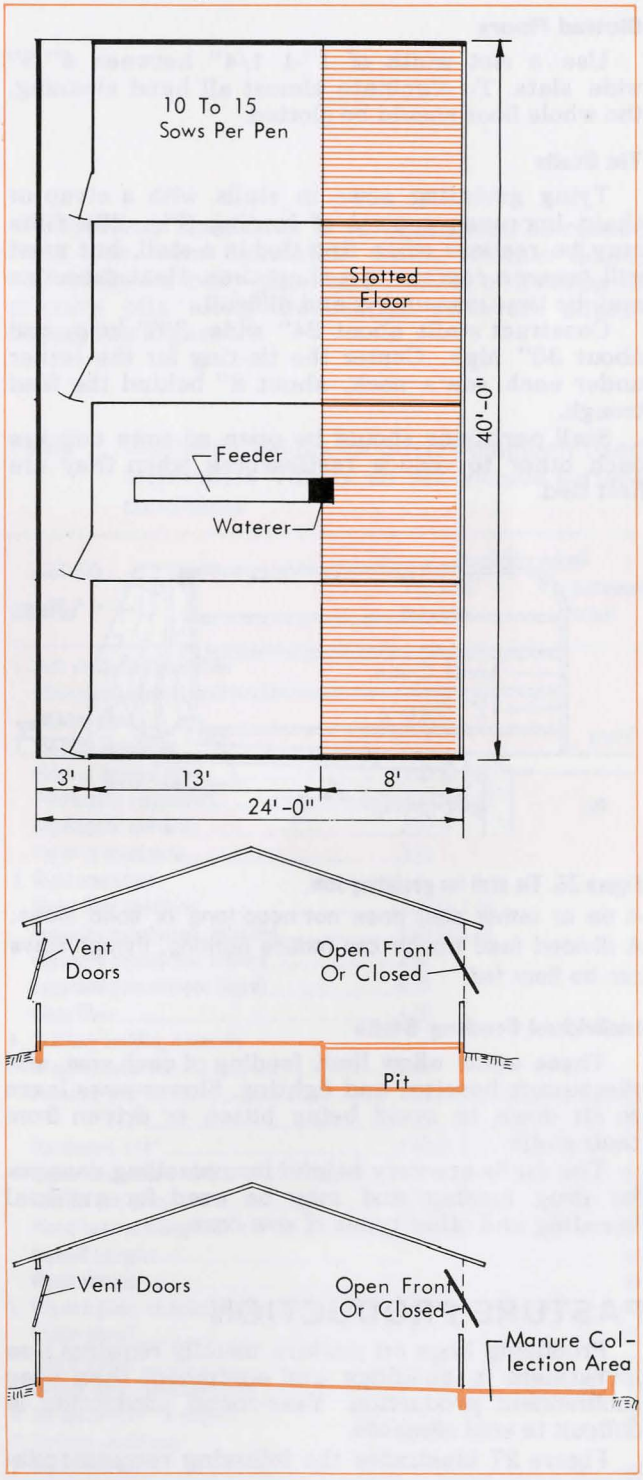


**Figure 25. Sows in pens, separate feeding area.**

Units similar to Figures 18 and 19 are suitable for gestation sow housing with either solid or partially slotted floors. Doors along the open front are optional.

### Breeding

A separate boar pen may be provided for individual breeding; a sow or gilt is moved into the boar's pen for mating. Conception may be reduced when breeding in confinement, especially with gilts.

### Slotted Floors

Use a slot width of 1"-1 1/4" between 4"-8" wide slats. To eliminate almost all hand cleaning, the whole floor should be slotted.

### Tie Stalls

Tying gestating sows in stalls with a strap or chain improves control of feeding (Fig. 26). Gilts may be restless when first tied in a stall, but most will become content in a short time. Heat detection may be time consuming and difficult.

Construct stalls about 24" wide, 3'-7' long, and about 30" high. Center the tie-ring for the tether under each sow's neck, about 8" behind the feed trough.

Stall partitions should be open so sows can see each other to reduce restlessness when they are first tied.

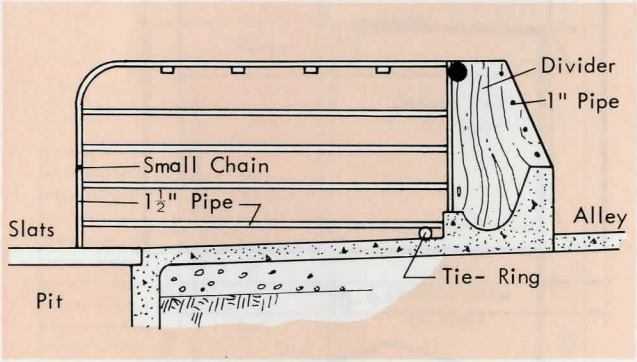


**Figure 26. Tie stall for gestating sow.**

A tie or tether stall does not need long or solid sides. A divided feed trough can reduce fighting, though sows can be floor fed.

### Individual Feeding Stalls

These stalls allow limit feeding of each sow, and discourage bossism and fighting. Slower sows learn to sit down to avoid being bitten or driven from their stalls.

The stalls are very helpful in controlling dosages for drug feeding and may be used for artificial breeding and other types of sow care.

## PASTURE PRODUCTION

Producing hogs on pasture usually requires less investment in buildings and equipment than does confinement production. Year-round production is difficult in cold climates.

Figure 27 illustrates the following recommendations:

- Provide shade and shelter. Move portable houses periodically.
- Locate feeders at a well-drained site, on pavement or wood platforms.
- Arrange pasture lots along a permanent road. Prevent wallows near waterers by forming a curb around the slab. Slope the slab toward the road.

### Pasture Space Requirements

- 10 gestating sows/acre.
- 7 sows and litters/acre.
- 50 to 100 growing-finishing pigs/acre, depending on rainfall and fertility.

### Shade Space Requirements

- 15-20 sq ft/sow.
- 20-30 sq ft/sow and litter.
- 4 sq ft/head to 100 lbs.
- 6 sq ft/head over 100 lbs.

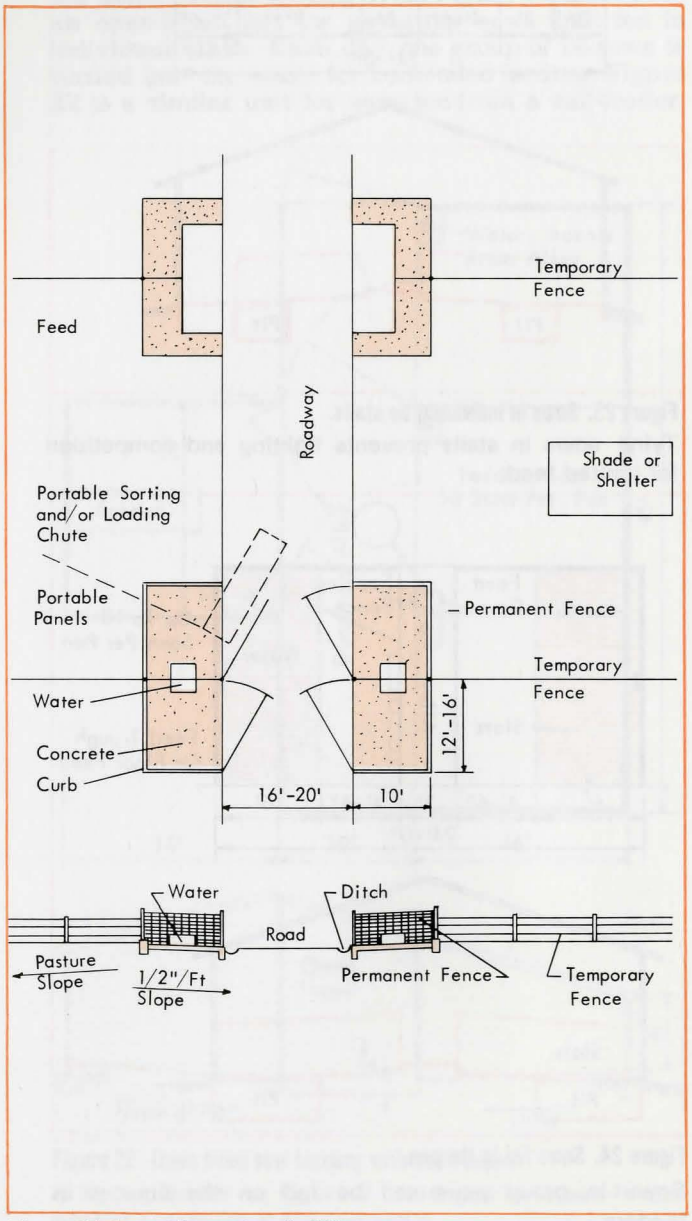


**Figure 27. Layout for pasture facilities.**

# VENTILATION

**Ventilation:**

- Removes moisture from inside buildings.
- Removes odors from animal wastes.
- Provides fresh air for animals.
- Removes excess heat in hot weather.

**How it works:**

Ventilation is a process of exchanging air. Air distributed through a building picks up moisture, heat, dust, and odors, and carries them outside the building. By bringing in clean air from outdoors, it is possible to maintain inside conditions within reasonable humidity, odor, and dust levels. To maintain temperature within the optimum range may require extra heat.

**Ventilation requires:**

- Fans to move air.
- Inlets to distribute incoming air.
- Outlets to exhaust stale, humid air.
- Controls to provide automatic operation.

**Successful ventilation usually requires:**

- Insulation.
- Vapor barrier.
- Supplemental heat.
- Management, and equipment maintenance.

At optimum air temperatures pigs use little feed to keep warm and usually want to eat at a high rate. At higher temperatures, a pig doesn't eat as much, and therefore gains less rapidly. At lower temperatures, some feed is used to produce body heat, so gain is reduced.

Humidity should be kept at 50%-80%. Both high and low humidities may cause respiratory problems. High humidities may also cause damaging condensation within an enclosed building.

## INSULATION

The effectiveness of a material in resisting heat flow is measured by its Resistance, R. A good insulating material has a high R value. Table 1 gives the R values for a number of common materials.

The amount of insulation to use depends on a number of factors. See Figure 28, Climate Zone Map, for winter temperature zones and recommended R values for farm buildings.

For a more complete discussion of insulation see AED-13, "Insulation and Heat Loss." Single copies are available free from the extension engineers listed inside the front cover.

Perimeter insulation is recommended to reduce heat loss from foundation walls. Warmer floors, especially for baby pigs, and control of freezing in manure pits along the outside walls are advantages. See Figure 29.

Table 1. Insulation Values for Some Commonly Used Materials.[1] Values do not include surface conditions

| Material | Insulation value[2] Per inch thickness | For thickness listed |
|---|---|---|
| 1. Batt or blanket insulation | | |
| Glass wool, mineral wool or fiber glass | 3.70 | |
| 2. Fill-type insulation | | |
| Glass or mineral wool | 3.00 to 3.50 | |
| Vermiculite (expanded) | 2.13 to 2.27 | |
| Shavings or sawdust | 2.22 | |
| Paper or wood pulp | 3.70 | |
| 3. Rigid insulation | | |
| Wood fiber sheathing | 2.27 to 2.63 | |
| Expanded polystyrene, extruded | 4.00 to 5.26 | |
| Expanded polystyrene, molded | 3.57 | |
| Expanded polyurethane (aged) | 6.25 | |
| Glass fiber | 4.00 | |
| 4. Ordinary building materials | | |
| Concrete, poured | 0.08 | |
| Plywood, 3/8" | 1.25 | .47 |
| 1/2" | 1.25 | .63 |
| Hardboard, 1/4" | 1.00 to 1.37 | |
| Cement asbestos board, 1/8" | | .03 |
| Lumber (fir, pine) 3/4" | 1.25 | .94 |
| Wood beveled siding 1/2" x 8" | | .81 |
| Asphalt shingles | | .44 |
| Wood shingles | | .94 |
| 5. Window glass, includes surface conditions | | |
| Single-glazed | | .89 |
| Single-glazed | | 1.79 |
| Double-pane insulating glass | | 1.45 to 1.73 |
| 6. Air space (3/4" or larger) | | .90 |
| 7. Surface conditions | | |
| Inside surface | | .68 |
| Outside surface (15 mph wind) | | .17 |

1 From ASHRAE Handbook of Fundamentals, 1972.
2 Mean temperature of 76°F.

Recommended Insulation

| Climate Zone | Resistance (R)[1] Walls | Ceilings |
|---|---|---|
| Mild | 9 | 12 |
| Moderate | 12 | 16 |
| Cold | 14 | 23 |

[1]Total of resistances of insulation, lining and siding, surfaces, and air spaces.

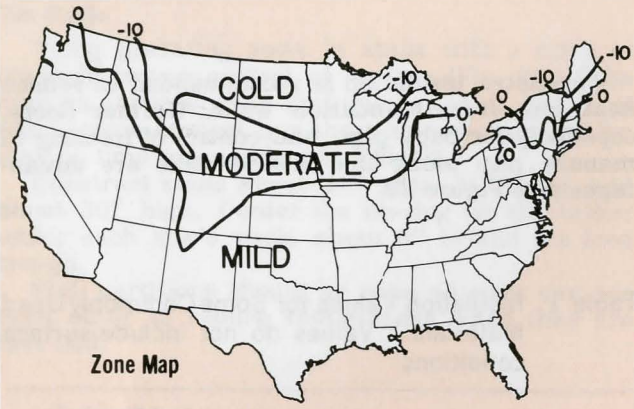


**Figure 28. Winter climate zone map.**

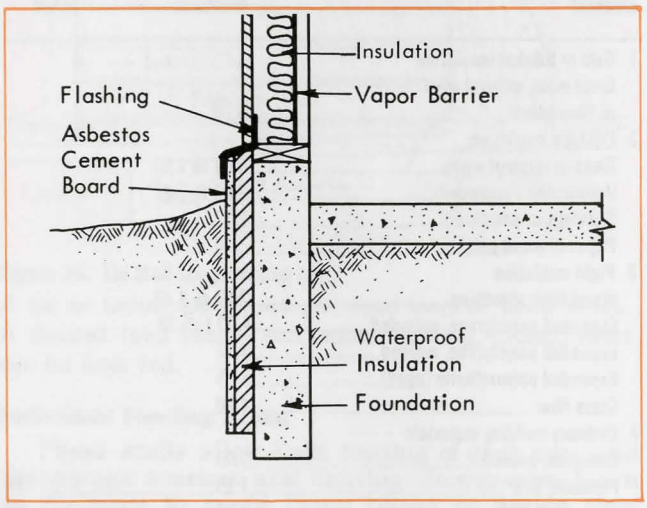


**Figure 29. Perimeter insulation.**

## VAPOR BARRIER

In livestock buildings, it is extremely important to protect the insulation from moisture. Moisture, in the form of water vapor, tends to move from the warmer moist areas to the cooler outside. The moisture enters the wall, moves outward, and condenses when it reaches a cold enough area. Condensed water in the wall greatly reduces the value of the insulation and may damage the wall.

To eliminate this flow of moisture, a supplemental vapor barrier should be placed near the warm side of the wall. (Fig. 29,30) Immediately beneath the interior lining material is best.

Common vapor barriers are 4 mil plastic film and some of the asphalt-impregnated building papers. Vapor barrier materials are lapped to prevent moisture from entering through the joints. In concrete sandwich walls, if the concrete is mixed according to instructions, no vapor barrier is required.

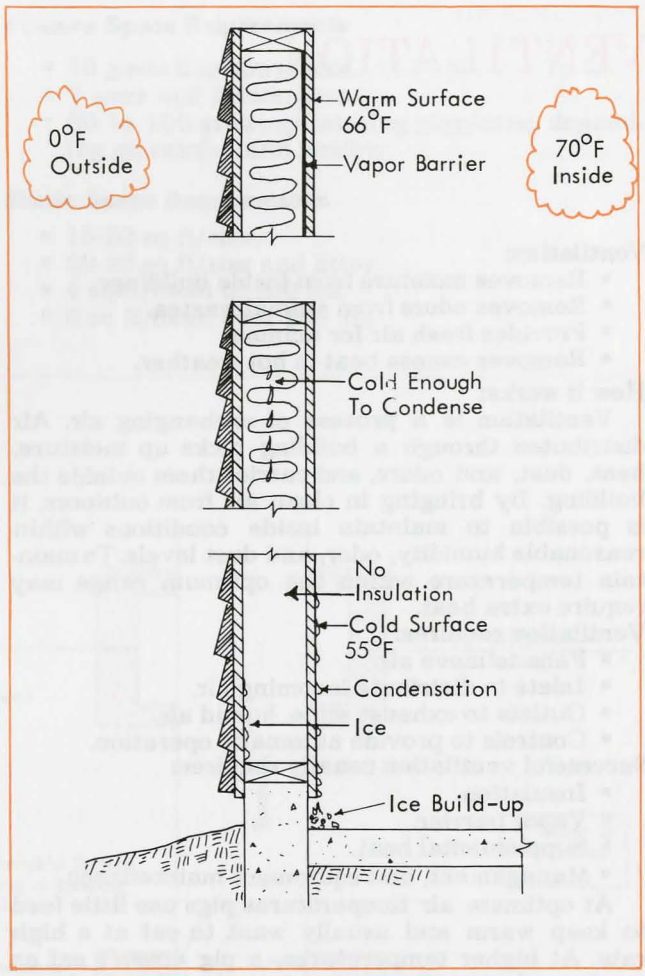


**Figure 30. Insulation and vapor barrier.**
When warm moist air contacts a cold surface, condensation occurs. Insulation helps to control sweating by making the wall and ceiling surfaces warmer.

## FANS

### Construction Features

- Fan blades, housing, and shutters should be heavy-gage and corrosion-resistant, because conditions inside a swine building are quite corrosive.
- A totally enclosed motor is especially needed for exhaust fans that draw dust-laden air over the motor. An open motor may fill with dust and overheat.
- Sealed bearings eliminate a periodic oiling schedule.
- Overload protection should be provided for each motor.
- Automatic shutters should close when the fan stops to avoid drafts blowing in.
- Wire mesh guards protect against personal injury and keep birds out.

## Speed

Ventilation air requirements vary from the minimum winter capacity to many times this value for summer. Fan capacity must adjust to temperature variations to meet changing ventilation needs.

A single-speed fan with an interval timer allows a wide range of capacities, but requires manual setting of the timer for each adjustment. A 1,000 cfm fan **on 3** minutes and **off 7** minutes provides an average air flow of 300 cfm, but may cause relatively rapid temperature changes. Provide anti-backdraft curtains on inlets if fans are on timers.

Two or more single-speed fans provide a range of capacities.

Newer variable-speed fans modulate air flow from a minimum of about 20% capacity. A solid-state control regulates the voltage going to the capacitor-start, capacitor-run motor. If the solid-state fan control is set at 60°, the fan operates at full capacity when the temperature reaches 64°-65° and drops to minimum capacity at 55°-56°.

## Capacity

Select fans rated by an association such as the Air Moving and Conditioning Association (AMCA). For ventilating swine buildings, select the capacity listed at 1/8" or 1/10" static pressure.

**Table 2. Recommended fan capacities (at 1/8" static pressure).**

| | Animal Weight lbs | Ventilation Rates, cfm Winter Minimum (continuous) | Winter Normal | Summer |
|---|---|---|---|---|
| Sow + litter | | | | |
| | 2-20 lb | 20 cfm | 80 cfm | 210 cfm |
| Growing pigs | | | | |
| | 20-40 lb | 2 cfm | 15 cfm | 36 cfm |
| | 40-100 | 5 | 20 | 48 |
| | 100-150 | 7 | 25 | 72 |
| | 150-210 | 10 | 35 | 100 |
| Gilt, sow, or boar | | | | |
| | 200-250 lb | 10 cfm | 35 cfm | 120 cfm |
| | 250-300 | 12 | 40 | 180 |
| | 300-500 | 15 | 45 | 250 |

**"Minimum" Winter:** Operate at least one fan at all times the inside temperature is above 35°F. Set a thermostat to shut the fan off when the inside temperature drops below 35°F. This fan should supply the cfm rate listed under "Minimum" in Table 2.

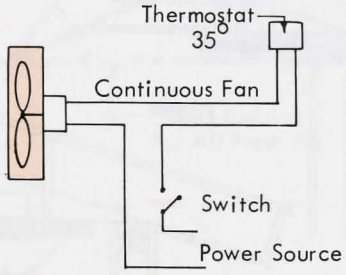


Install this fan to exhaust the air from above any stored liquid manure.

**"Normal" Winter:** Provide additional fans, thermostatically set to start in 5° steps to prevent sudden drops in temperature. These fans, together with the minimum fans, provide the "normal" capacity for outdoor temperatures up to about 55°F.

**Summer:** Provide additional fans to supply the cfm rates listed under "Summer" in Table 2, OR, install large panels in the walls that can be opened for natural ventilation. Some or all of these fans or panels should be operated when the inside building temperature is above 75°F.

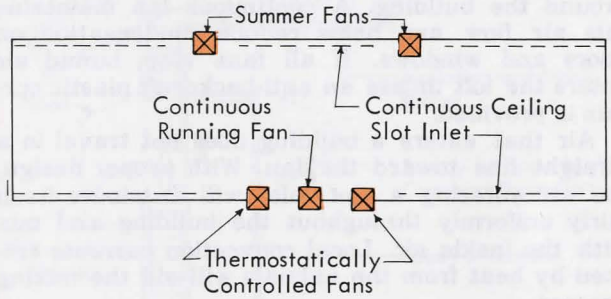


Circulation fans improve air distribution in winter to aid in drying or heating corners. In summer, they improve animal comfort by increasing air velocity over the skin. Circulation fans can be 1750 rpm unrated units, but should have sealed motors. Provide one 10"-12" swivel-mounted fan for each 50'-60' of wall.

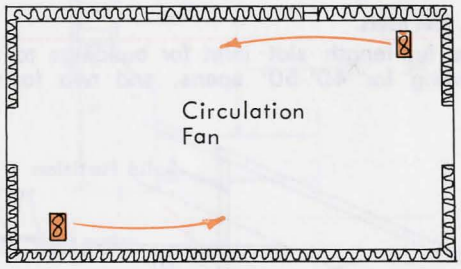


## Location

Keep fans away from loose-fitting doors and windows. Locate them on the south or east side if possible, and away from prevailing winds.

The distribution and flow of air within a building is almost completely determined by how and where fresh air enters, and very little by fan locations. Little direct mixing effect occurs more than about 20' from an inlet or pressure fan. Slot inlets, pressure ducts, or baffled ceiling-mounted intake fans should be arranged about 20' apart.

# AIR INLETS AND OUTLETS

The rate of air change is determined primarily by fan delivery, but the uniformity of air distribution depends primarily on the location, design, and adjustment of the air inlets.

Pressure difference between inside and outside makes the air move through an opening. Exhaust fans create a vacuum—they suck air in; intake fans create a positive pressure—they push air out.

In an exhaust-fan system, for example, if inlets are too small, the fans will operate at reduced capacity and entering air will have a high velocity.

If inlets are too large (or there are unwanted inlets around doors, loose windows, or other cracks) air movement will be sluggish and mixing will be reduced. Inlet design is, then, a compromise between best fan capacity with poor mixing and mildly reduced fan capacity with higher velocity and better mixing.

A continuous slot in the ceiling at the outer wall provides a curtain of fresh air completely around the building. A continuous fan maintains this air flow and helps reduce condensation on doors and windows. If all fans stop, humid air enters the loft unless an anti-backdraft plastic curtain is provided.

Air that enters a building does not travel in a straight line toward the fan. With proper design, the air entering a slot inlet will distribute itself fairly uniformly throughout the building and mix with the inside air. Local convection currents created by heat from the animals will aid the mixing process.

A convenient rule of thumb for intake design is to multiply the total winter fan capacity (cfm) by ¼ to give the required area (in square inches).

To determine slot width, divide the required area by the length of the slot (in inches). For example, determine the width of slot along two walls of a building 60' long with a winter fan capacity of 6,000 cfm.

**Solution:**
Air intake size = 6,000 x 1/4 = 1,500 sq in.
Length of slot = (60 x 12) inches x 2 = 1440 in.

$$\text{Width of slot} = \frac{1{,}500 \text{ sq. in.}}{1440 \text{ in.}} = 1 \text{ inch}$$

Therefore a 1" slot inlet along each wall is adequate.

If a center slot intake and suspended baffle is used, there is a slot down each side of the baffle; set the baffle 1" below the ceiling.

## Slot Inlets

Slot inlets distribute incoming air along the length of a building and, because of the velocity of the air jets, create mixing across the width. An eave inlet has a narrow slot to draw air from an attic in winter—taking advantage of some preheating under a sun-warmed roof. A larger slot can be opened for the large volumes of fresh air needed during hot months. A ceiling inlet has a jet toward each wall, but draws all air from the attic and so is a winter inlet only.

A slot inlet should be adjustable. Only experience with a particular building and its ventilation system can determine the best slot width for severe or normal weather, or for the ends and middle of the building.

**Figure 31. Slot inlets.**

Use one full-length slot inlet for buildings to about 40' wide. Use one down the center of the building for 40'-50' spans, and two for wider spans.

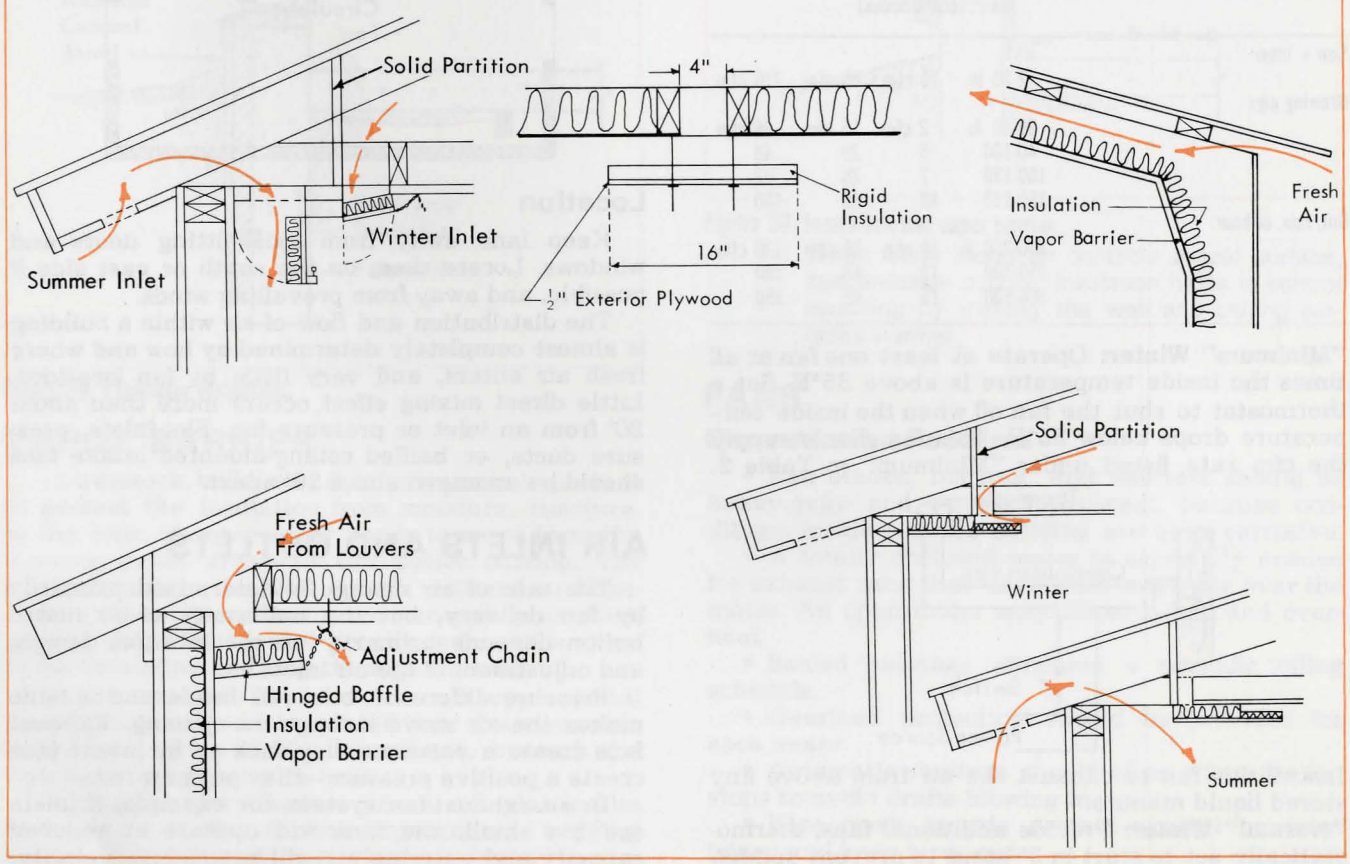

## Duct Inlets

In small buildings where only one fan is needed and a pressure system is desired, a duct will help distribute incoming air. Air delivery from the duct will not be uniform.

Determine fan capacity required (page 21). Select a fan to deliver the required cfm at 1/8" static pressure. Make a square duct the size of the fan diameter or larger, or a rectangular duct of the same area. Provide one 2" hole (round or square) for each 20 cfm fan capacity, spacing holes uniformly down each side of the duct.

To increase delivery from the fan end of the duct, increase the number or size of holes at the fan end and close some at the other end.

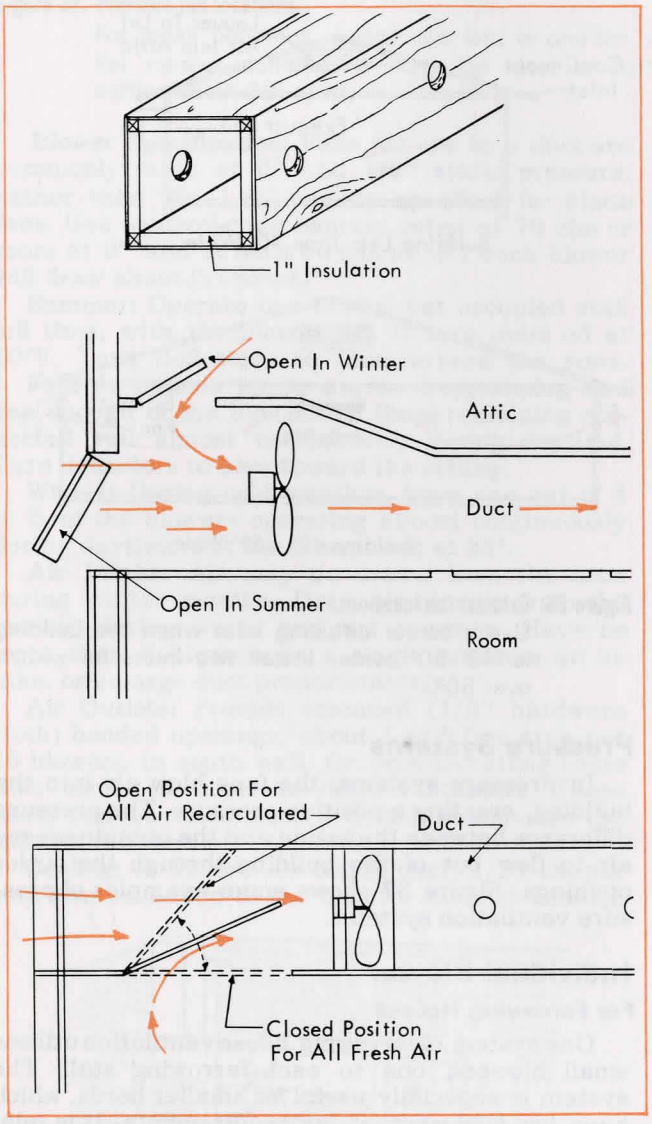


**Figure 32. Duct inlets.**

### Duct Outlet

During remodeling and improving an older building in a severe climate, a ventilation system may be needed despite inadequate insulation. To reduce heat loss, ducts may be built over exhaust fans that permit drawing cooler air off the floor during very cold weather, and warmer air near the ceiling during mild or warm weather.

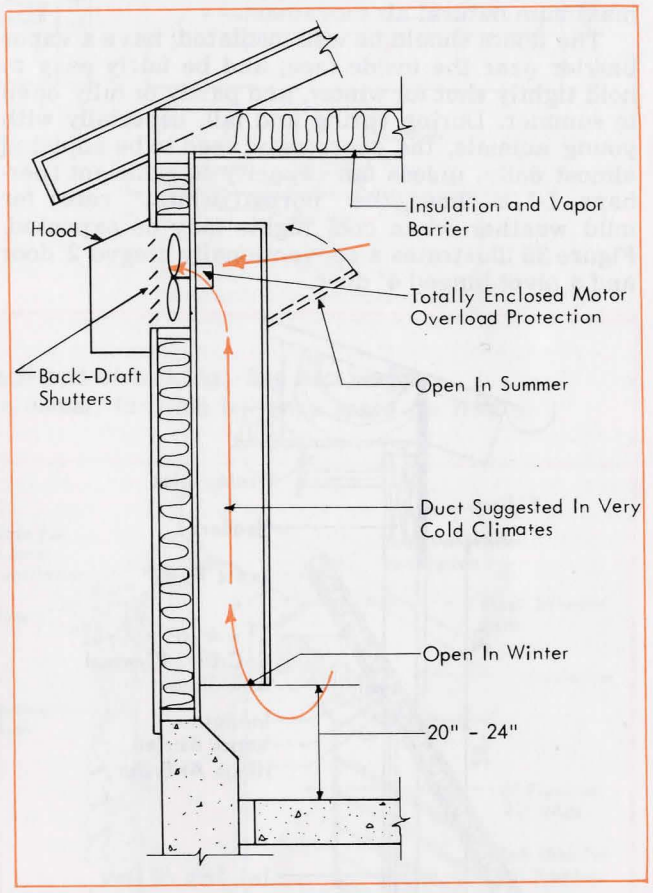


**Figure 33. Duct outlet.**

## Manure Pit Outlets

In a building with manure stored below the floor, ventilation of the space between the liquid and the floor is recommended. The low-volume continuous winter fan is commonly located to take air from the pit to aid in odor control and possibly remove some harmful gases. This ventilation may reduce, but will not cure, odor problems. In large buildings, where two or more small continuous fans could provide minimum winter ventilation, they can be spaced around the pit for increased effectiveness. See section on "Waste Disposal".

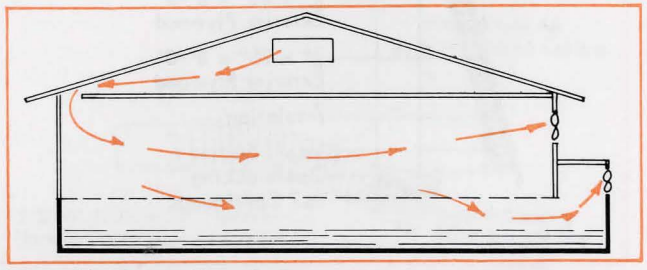

**Figure 34. Manure pit ventilation.**

## Summer Inlets

Both open front and fan-ventilated buildings can use large doors for natural summer ventilation. The doors may open almost an entire wall, permitting maximum natural air movement.

The doors should be well insulated; have a vapor barrier near the inside face; and be fairly easy to hold tightly shut for winter, and partly or fully open in summer. During spring and fall, especially with young animals, the doors may need to be adjusted almost daily, unless fan capacity is sufficient (perhaps 1-1/2 times the "normal winter" rate) for mild weather when cool nights may be expected. Figure 35 illustrates a conventionally hinged 2' door and a pivot-hinged 4' door.

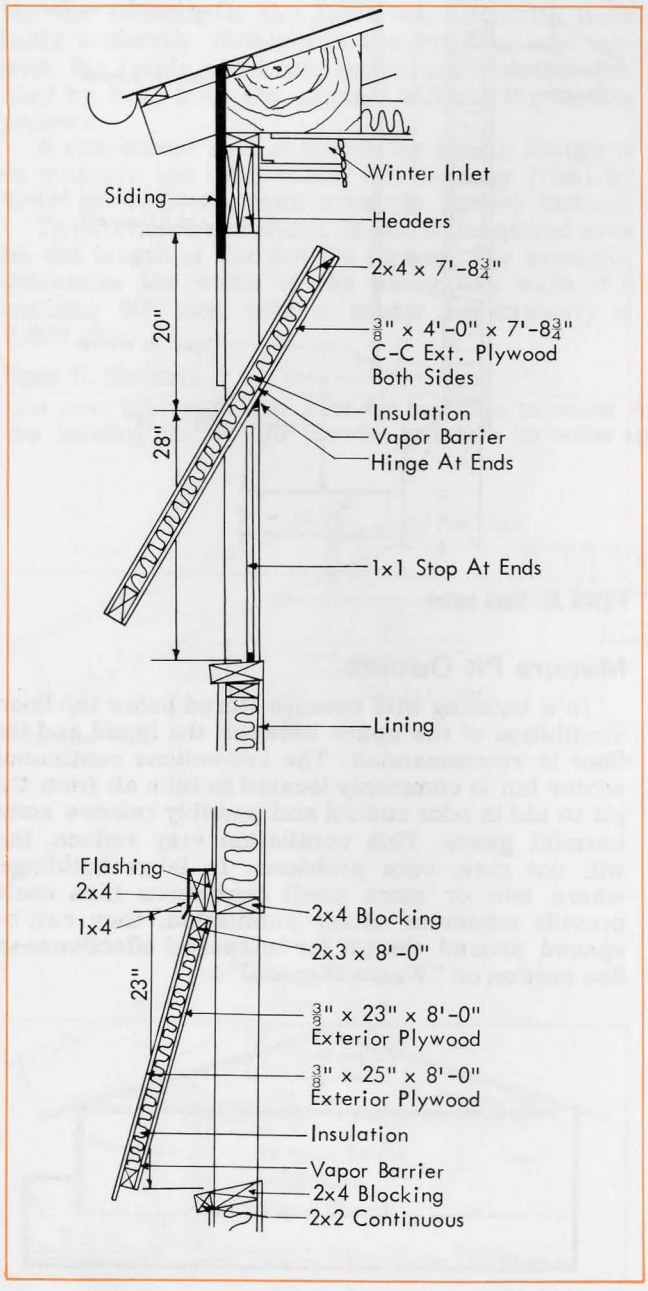


**Figure 35. Doors for summer ventilation.**

# VENTILATION SYSTEMS

## Exhaust Systems

In exhaust ventilation, fans expel air from the building; they create a partial vacuum inside the building. The pressure difference between outside and inside sucks ventilation air through the inlets. Figure 36 shows some exhaust systems.

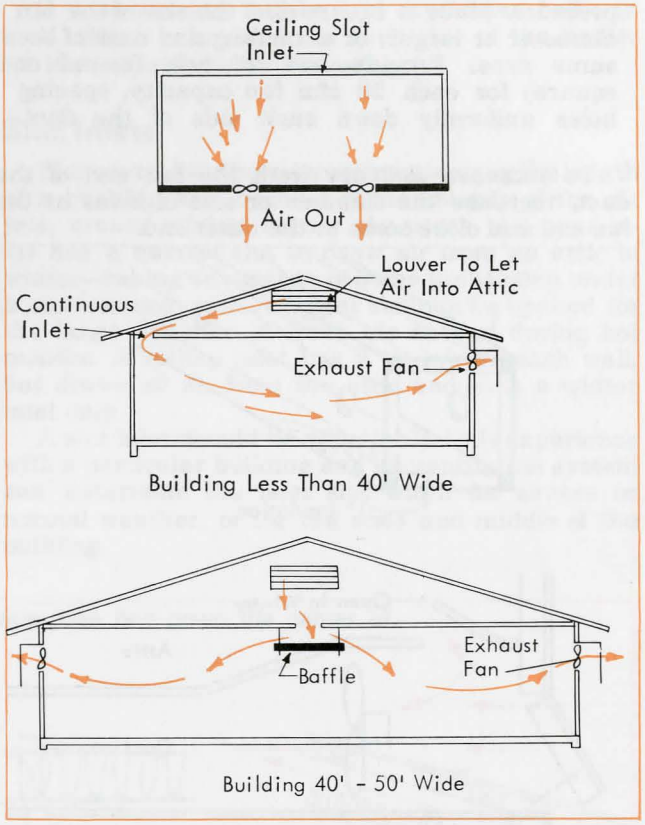


**Figure 36. Exhaust fan locations.**
Use a center diffusing inlet when the building is 40'-50' wide. Install two inlets for widths over 50'.

## Pressure Systems

In pressure systems, the fans blow air into the building, creating a positive pressure. The pressure difference between the inside and the outside causes air to flow out of the building through the outlet openings. Figure 37 shows some examples of pressure ventilation systems.

## Individual Blower

### For Farrowing Houses

One system of farrowing house ventilation utilizes small blowers, one to each farrowing stall. The system is especially useful for smaller herds, which have low cold-weather fan requirements. It is relatively easy to include summer air cooling for each sow.

Provide: intake ducts for fresh air; 1 blower and one electrical outlet per farrowing stall, and 1 thermostat controlling the outlet circuit to each line of blowers.

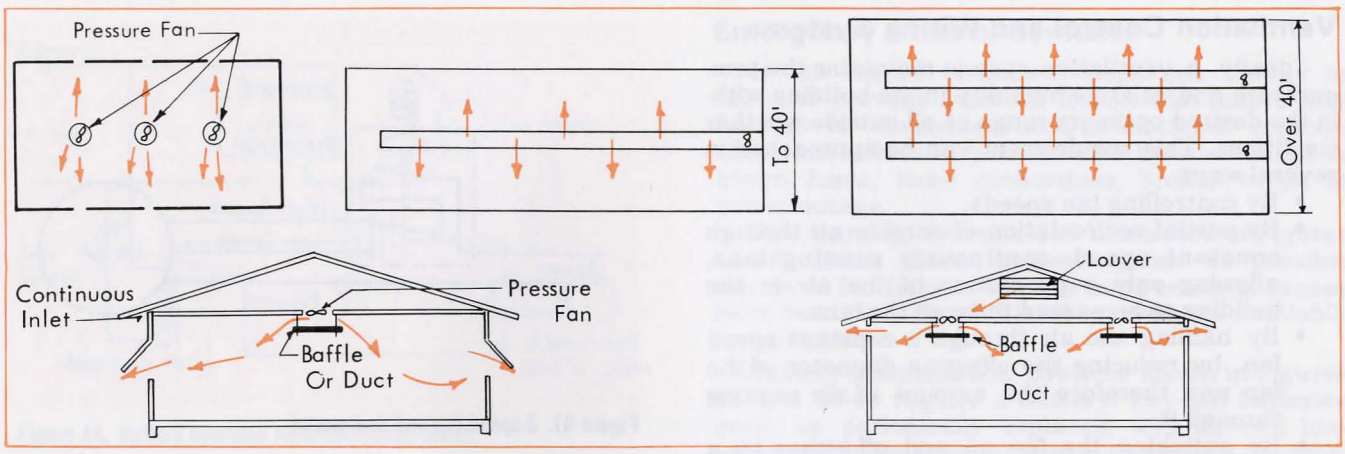


**Figure 37. Pressure fan locations.**

For small buildings, install one fan, or one fan at each end of building. See duct design. For narrow buildings, install fan duct or baffle in center; for wide buildings space fan duct or baffles about 20' apart.

**Blower Specification:** Fans for use in a duct are commonly rated at 0" and 1/2" static pressure, rather than the 1/8" usually specified for blade fans. Use squirrel-cage blowers rated at 70 cfm or more at 0" and at least 50 cfm at ½"; each blower will draw about 0.7 amps.

**Summer:** Operate one blower per occupied stall full time, with thermostat set to turn units off at 60°F. Turn deflectors to blow toward the sows.

**Fall:** As outside temperatures drop, unplug and cap enough of the blowers so those remaining connected run almost continuously during daytime. Turn deflectors to blow toward the ceiling.

**Winter:** During cold weather, have one out of 4 or 5 of the blowers operating almost continuously during daytime. Set the thermostat at 35°.

**Air Intake:** Air may be drawn from the attic during winter months. Draw air directly from the outside during warm and hot weather. Have no more than 8 blowers on a single run from an intake, or enlarge duct proportionately.

**Air Outlets:** Provide screened (1/2" hardware cloth) hooded openings, about 1 sq ft free area per 10 blowers, in south wall. Or, provide ceiling vents with insulated ducts to ridge ventilators. These ducts can be disconnected during summer so the exhaust air ventilates the attic.

**Cooling:** A window air conditioner, 1/10 ton per sow, can be added to the unit for summer cooling.

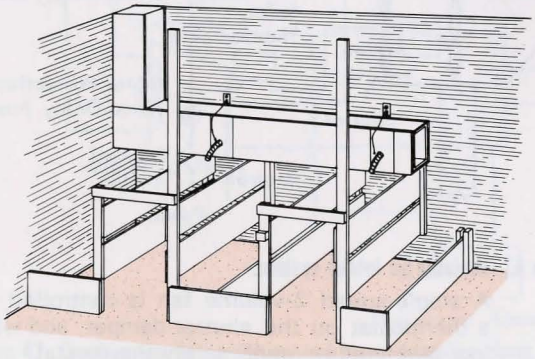

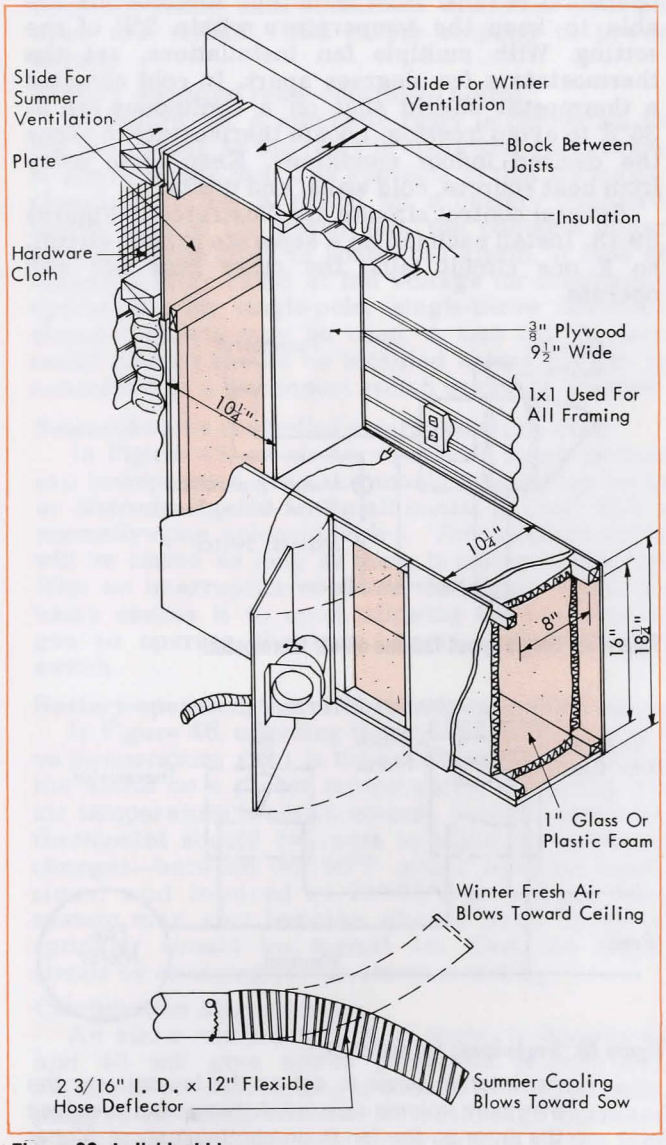


**Figure 38. Individual blower.**

## Ventilation Control and Wiring Systems

Ideally, a ventilation system maintains the temperature and relative humidity in the building within the desired optimum range at all outside weather conditions. This requirement can be approached in several ways.

- By controlling fan speeds.
- By partial recirculation of outside air through constant speed, continously running fans, allowing only a proportion of the air in the building to be passed through the fans.
- By baffling the air through a constant speed fan, by reducing the effective diameter of the fan and therefore the amount of air passing through it.
- By switching the fan on and off either by a time clock or thermostat. The time clock will turn the fan on and off at definite intervals of time, while a thermostat senses temperature.

Thermostats have been satisfactory for on-off operation of fans. Most farm-type thermostats are able to keep the temperature within 2°F of the setting. With multiple fan installations, set the thermostats a few degrees apart. In cold climates a thermostat should shut off a continuous fan at 35°F to avoid freezing. Locate thermostats to sense the desired indoor conditions. Keep them away from heat sources, cold walls, and drafts.

Several control circuits are illustrated in Figures 39-43. Install each fan on a separate branch circuit, so if one circuit fails, the other fans will still operate.

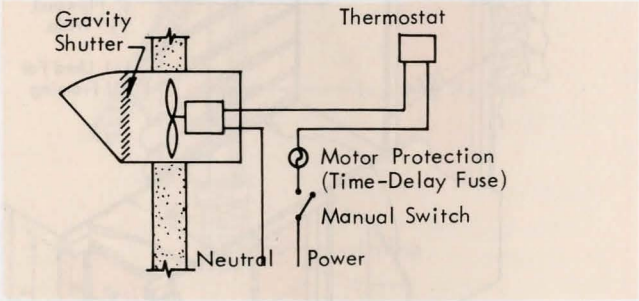


**Figure 39. Single-speed fan and on-off thermostat.**

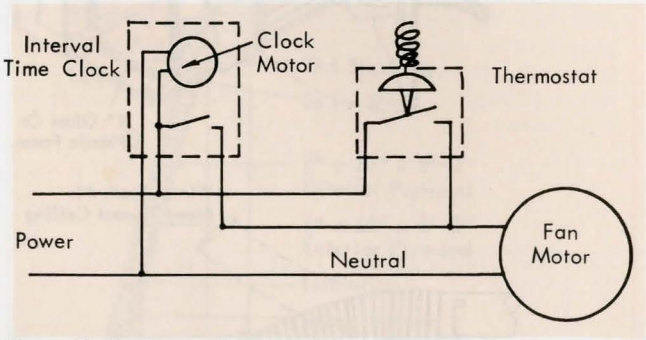


**Figure 40. Single-speed fan and clock.**

An interval timer is set so the fan delivers the minimum volume needed. A thermostat overrides the timer so the fan is on continuously at higher indoor temperatures.

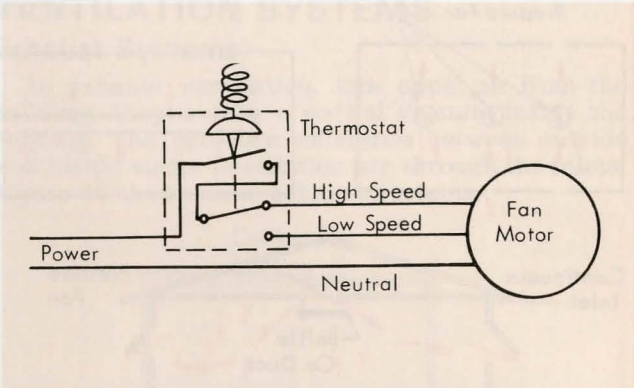


**Figure 41. 2-speed fan and thermostat.**

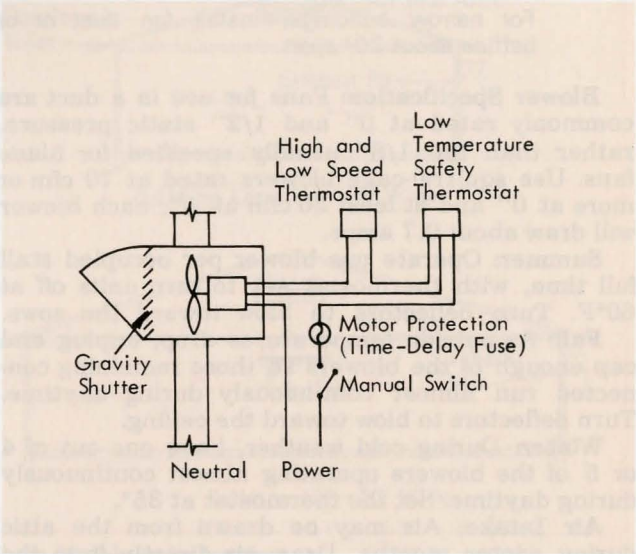


**Figure 42. 2-speed fan and high-low and low temperature on-off thermostats.**

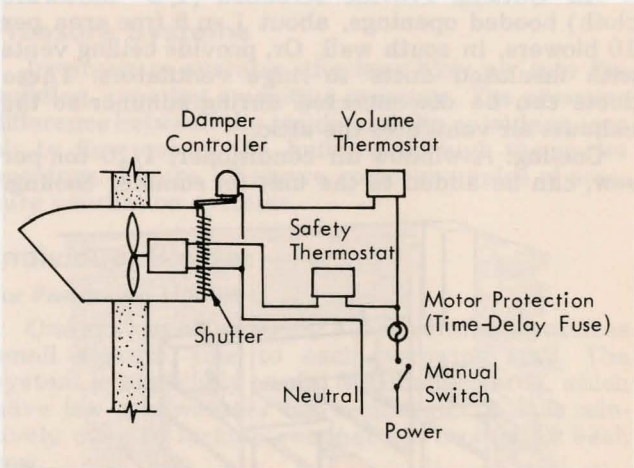


**Figure 43. Variable air intake system.**

A single-speed 2-volume fan is controlled with a thermostat on the shutter-damper, and with a low temperature on-off safety thermostat.

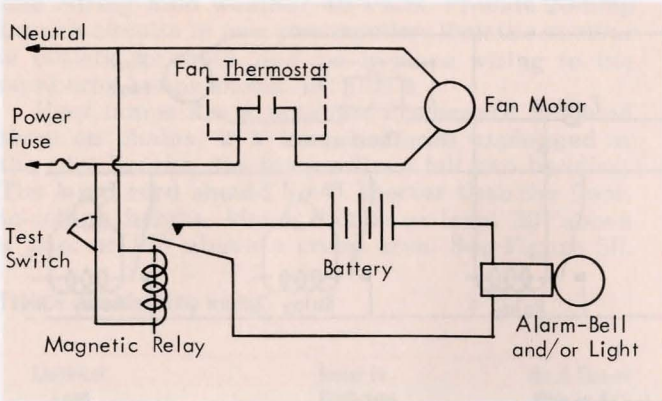


**Figure 44. Battery operated relay-controlled alarm.**

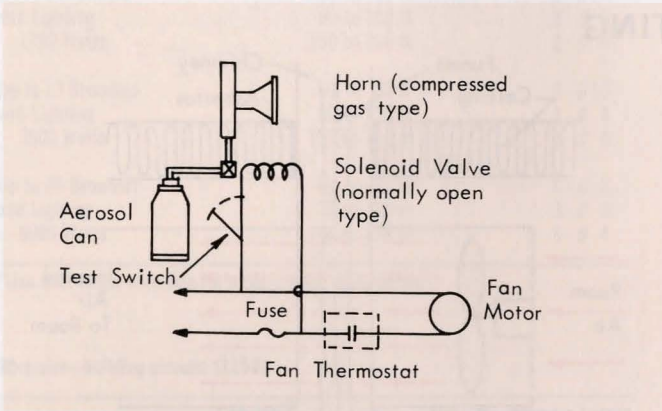


**Figure 45. Solonoid valve-controlled compressed gas horn.**

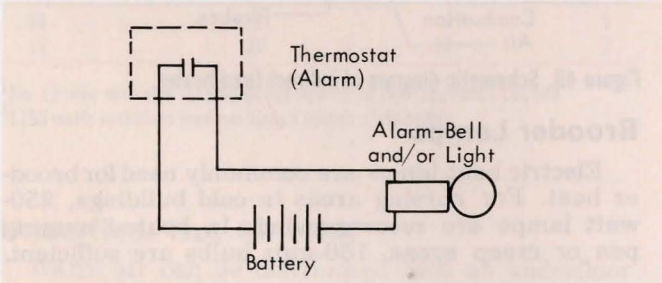


**Figure 46. Battery-operated, thermostatically-controlled alarm.**

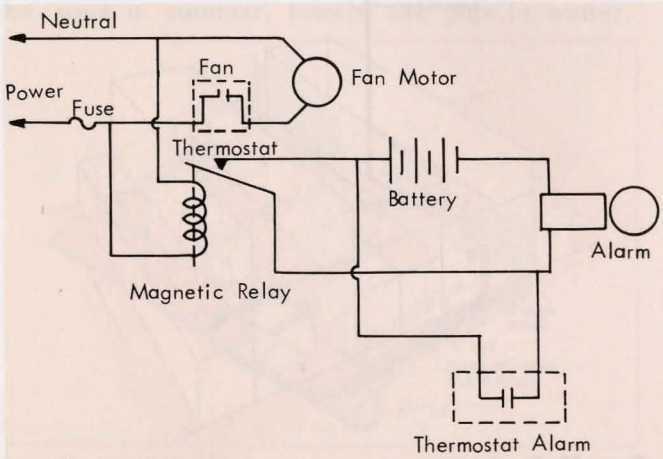


**Figure 47. Combination temperature- and power-sensitive alarm.**

## Emergency Control Systems

If fan failure is known, steps can usually be taken to prevent livestock losses. Fan failure may be due to mechanical and/or electrical reasons. Electrical failure may be caused by such things as blown fuses, loose connections, broken wires, or power outage.

Five warning systems are illustrated in Figures 44-48. These cannot protect against all possible causes of fan failure, but the more common causes have been considered. Alarm systems are available commercially.

**Battery Maintenance.** Systems shown in Figures 44 and 46-48 require a battery. Dry-cell batteries must be periodically replaced, and wet-cell batteries should be kept charged with a trickle-charger. This latter method requires frequent checks to replenish water. The system shown in Figure 45 requires no battery.

**Response Time.** The alarm shown in Figure 45 does not sound until conditions within the confined area are critical. The others respond to power failure.

**Battery operated relay-controlled alarm**

In Figure 44, a magnetic relay is connected to the fan circuit, so the relay is energized when there is power to the fan. The contacts of this normally-closed relay are a switch for a battery operated alarm. Should the power fail, the contacts under spring tension close to sound the alarm. A type of magnetic relay rated at fan voltage for continuous operation with single-pole, single-throw normally closed contacts may be used. A test switch (normally closed) should be included unless the fan is connected to a disconnect switch or circuit breaker.

**Solenoid-valve controlled compressed gas horn**

In Figure 45, an air horn powered by an aerosol can (compressed gas), commonly used as fog horns or distress signals for small boats, is used with a normally-open solenoid valve. The solenoid valve will be closed as long as there is power to the fan. With an interruption of power, the spring within the valve causes it to open, allowing the compressed gas to operate the horn. Again, include a test switch.

**Battery-operated, thermostatically-controlled alarm**

In Figure 46, a cooling thermostat (contacts close on temperature rise) is the sensing element, giving the alarm on a preset temperature, indicating the air temperature is above normal. In some cases the thermostat should be reset to adjust for seasonal changes—between 85°-90°F under summer conditions, and lowered to 70°-75°F in winter. This system may also indicate when a water spray or sprinkler should be turned on. Test the alarm circuit by changing the thermostat setting.

**Combination alarm system**

An alarm combining circuits shown in Figures 44 and 46 will give added protection (Figure 47). Failure of ventilation due to broken or slipped belts, plugged air ducts, etc., is detected through increased air temperature, while a power failure to the fans is detected immediately.

**Multiple fan operations**

Wiring an alarm system for several fans is shown in Figure 48. It requires a relay for each fan, but only one alarm. If the combination system is used, a relay is required for each fan and a thermostat for each pen.

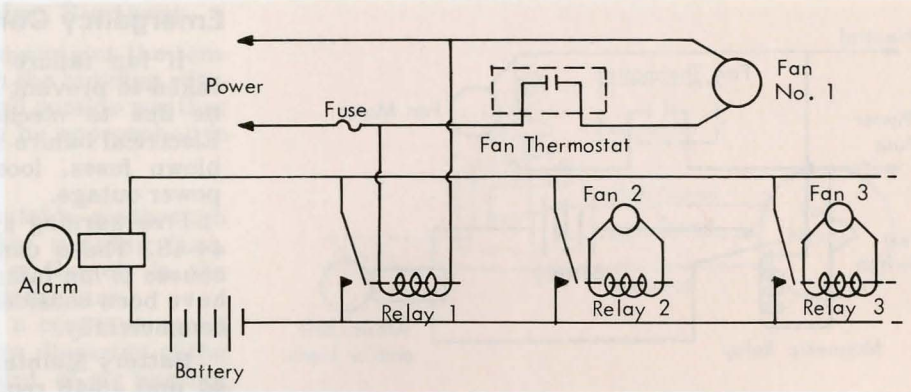


**Figure 48. Alarm on multiple-fan system.**

# HEATING

Supplemental heat is added to swine buildings to maintain inside temperature within the range of animal comfort, and to aid in moisture removal and humidity control. As cold outside air is warmed its capacity to absorb water increases, so ventilation air tends to dry out the building. In livestock buildings water is introduced from animal wastes, spilled water, and wash water. Animals also add heat from their bodies, but often not enough for good ventilation.

Enough heat is added to warm outside air to the desired inside temperature and also to evaporate water to be exhausted as vapor. Table 3 lists supplemental heat needed for the cold and mild temperature zones of Figure 28. Total heat needed = number of litters or animals times the heat required for each.

**Table 3. Supplemental heat required.**

| Animal | Inside Temp °F[1] | Supplemental Heat Btu–hr[2] Slotted Floors Cold | Slotted Floors Mild | Bedded or Scraped Floors Cold | Bedded or Scraped Floors Mild |
|---|---|---|---|---|---|
| Sow + Litter | 60°[3] | | | 2000 | 1400 |
| | 80°[4] | 1500 | 1000 | | |
| 20-40# | 70° | 275 | 125 | 300 | 150 |
| | | (plus brooder heat for pigs) | | | |
| Over 40# | 60° ±15° | 250 | 100 | 500 | 200 |

[1]Optimum air temperature. Avoid cold air drafts, especially on young pigs.
[2]See Climate Zone Map, page 20.
[3]Solid floors; provide brooder heat.
[4]Slotted floors.

Oil- and gas-fired heaters use air to support combustion. Fumes from the firebox should not be released indoors, but should be ducted directly outdoors. Figure 49 illustrates one type of stationary heater. Room air enters the bottom, passes through the fire box, and is exhausted through a chimney. Air is drawn by the fan from the room and/or outdoors, it is heated by passing through heated tubes in the fire box, and is then discharged to the room.

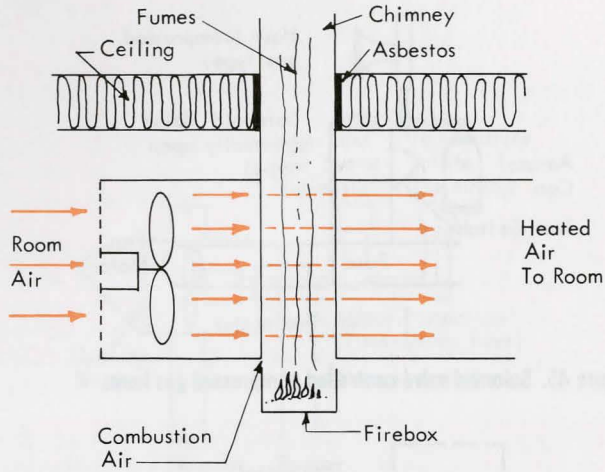


**Figure 49. Schematic diagram of indirect-fired heater.**

## Brooder Lamps

Electric heat lamps are commonly used for brooder heat. For nursing areas in cold buildings, 250-watt lamps are recommended. In heated nursing pen or creep areas, 150-watt bulbs are sufficient,

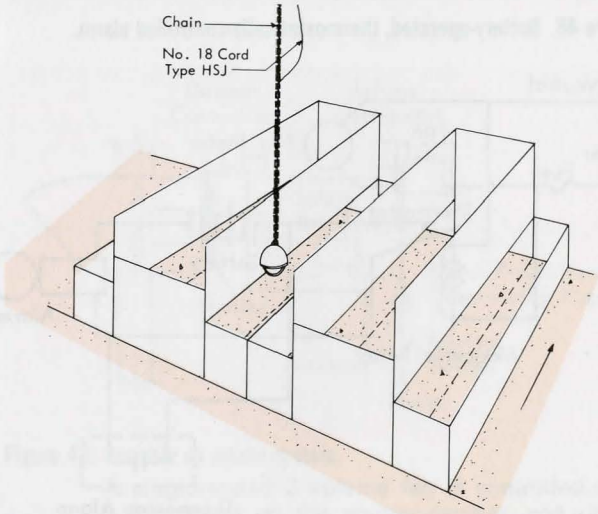


**Figure 50. Brooder lamp.**

and during mild weather 40-watts. Provide 20-amp branch circuits in new construction; limit the number of outlets for both new or in-place wiring to the number of lamps shown in Table 4.

Heat lamps are a potential fire hazard. Suspend them on chains; if a lamp becomes unplugged or the wire breaks, the lamp will not fall into bedding. The lamp cord should be 1' shorter than the floor-to-ceiling height. Mount lamps at least 30" above a pen, or 18" above a creep area. See Figure 50.

**Table 4. Brooder lamp wiring.**

| Electrical Load | Meter to Hoghouse | No. & Size of Wire in Air* |
|---|---|---|
| Up to 6 Brooders and Lighting 1750 Watts | Up to 50 ft | 2 - #10 |
| | 50 to 150 ft | 2 - # 8 |
| | 150 to 250 ft | 2 - # 6 |
| Up to 13 Brooders and Lighting 3500 Watts | Up to 50 ft | 3 - #10 |
| | 50 to 150 ft | 3 - # 8 |
| | 150 to 250 ft | 3 - # 6 |
| Up to 25 Brooders and Lighting 8000 Watts | Up to 70 ft | 3 - # 8 |
| | 70 to 100 ft | 3 - # 6 |
| | 100 to 175 ft | 3 - # 4 |

*Use next larger wire size for underground installation.

**Wire size—building circuits (115V)**

| Wire Size[1] | Capacity[2] Amps. | Max. No. Brooder Lamps 150w | 250w |
|---|---|---|---|
| 14 | 15 | 9 | 5 |
| 12 | 20 | 12 | 7 |

[1]No. 12 wire minimum recommended size for all new appliance circuits.
[2]1750 watts maximum load per circuit (check state code).

## Underfloor Hot Air Heat

Warm air can be distributed with an underfloor system. The laterals provide some floor heating in the creep area. Turn the outlets to blow air toward the sows in summer, toward the pigs in winter.

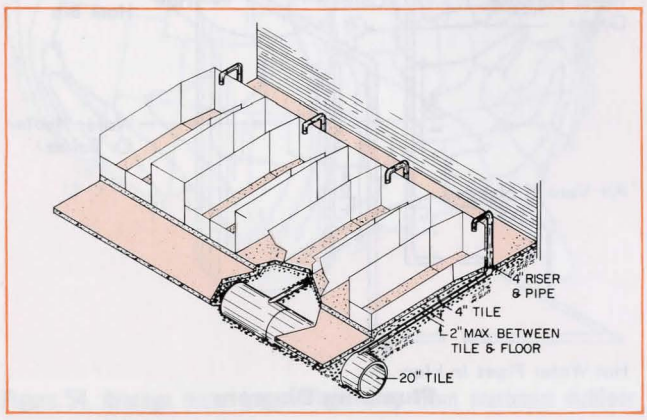


**Figure 51. Hot air floor heat.**

## Underfloor Cable or Pipe Heat

Floor heat provides a warm dry floor for young pigs. Little or no bedding is used. Heat lamps commonly supplement the floor heat for 2-3 days during cold weather farrowing. Install perimeter insulation when stalls are placed near the outside walls.

Use approximately 85°-90° slab temperature at farrowing. Lower gradually to 70° when pigs are 3 weeks old. Discontinue floor heat at 4 to 5 weeks of age. Gradually adjust air temperature until conditions during the last few days in the growing pens are equal to conditions in finishing unit.

Install a thermostat with a cross-ambient fill sensing bulb on 5' of capillary tube. Install a 1" copper pipe 2" deep and 2" from a heating element so that one end extends into the heated area of the floor in the desired location for the sensing bulb. Insert the sensing bulb in the pipe. To calibrate the thermostat (which indicates internal instead of surface slab temperature), adjust it to obtain desired surface temperatures measured with a thermometer laid on the floor.

### Electric Cable

Install a snap switch for each coil except in coils where the thermostat is located. Electrically ground all steel stalls and waterers. Do not place cable directly on plastic insulation.

Electric cable usually has a lower installation cost than piping, avoids freezing problems, and permits individual pen control.

**Table 5. Electric heat cable spacing.**

The cable is labeled with the watts per linear foot. This table gives the spacing, in inches between wires to obtain the desired watts / sq ft.

| Watts per square foot | Watts per lineal foot of heating cable 2-1/2 | 2-3/4 | 3-1/2 | 5 | 7-1/2 |
|---|---|---|---|---|---|
| | (Spacing between adjacent runs of cable, inches) | | | | |
| 25 | 1-3/16 | 1-5/16 | 1-11/16 | 2-3/8 | 3-5/8 |
| 30 | 1 | 1-1/8 | 1-3/8 | 2 | 3 |
| 35 | — | — | 1-3/16 | 1-3/4 | 2-9/16 |
| 40 | — | — | 1-1/16 | 1-1/2 | 2-1/4 |
| 45 | — | — | — | 1-5/16 | 2 |
| 50 | — | — | — | 1-3/16 | 1-13/16 |
| 55 | — | — | — | 1-1/8 | 1-5/8 |
| 60 | — | — | — | 1 | 1-1/2 |

Install sufficient cable to supply 30 to 40 watts per square foot of creep area for baby pigs and about 25 watts per square foot of sleeping area for weaned pigs (35 watts if open-front building). Imbed the cable 1-1/2" into the concrete and space uniformly. The cable will burn out if two wires touch or cross. Use cable approved for use in concrete. Install one thermostat for each 4 or 5 pens.

**Figure 52. Electric floor heat.**
Electric cable is buried in the creep area of the farrowing stall floor to improve pig comfort.

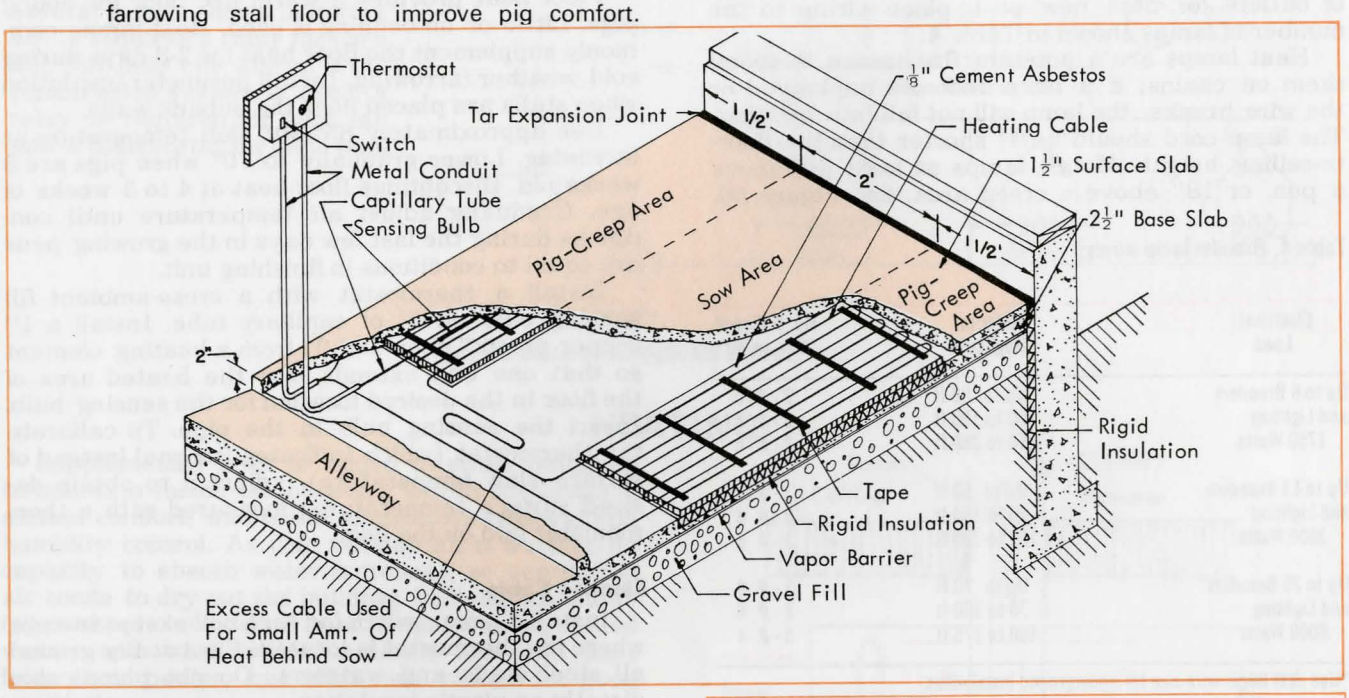


## Hot Water

Hot water heating will usually have lower operating costs than electric cable.

Install 3/4" copper, wrought iron, black iron, or high temperature plastic pipe. Do not use galvanized iron or cold water plastic pipe. Place the pipe to within 6" of the edge of a concrete slab and 2" from the top. Space the pipes about 12" apart.

Provide adequate water heating and circulating equipment. An input of 50 Btu/hour for each foot of pipe should keep the floor temperature at 80°F. Feet of pipe times 50 Btu/hr = the output required from the boiler or water heater. A 30-gallon gas water heater supplies about 24,000 Btu/hour. Heat water to about 140°F.

Figure 53 shows a simplified piping layout for farrowing stalls and illustrates typical plumbing equipment.

- Heat source: gas hot water heater (up to about 60,000 Btu/hr) or commercial boiler.
- Water supply valve: water is in a closed system so little water is added. The valve is used to close down the system.
- Relief valve: releases water when pressure gets too high; locate so pigs and people will not get burned.
- Expansion tank: an air tank to allow for the expansion of water as it is heated. A slight glass permits checking water level; the level in the expansion tank should be low when the system is cold.
- Pump: circulating type, installed in the return line. Capacity: 1 gallon per minute for each 10,000 Btu/hour in a growing or finishing unit, and about 5000 Btu/hour in farrowing or nursery units.

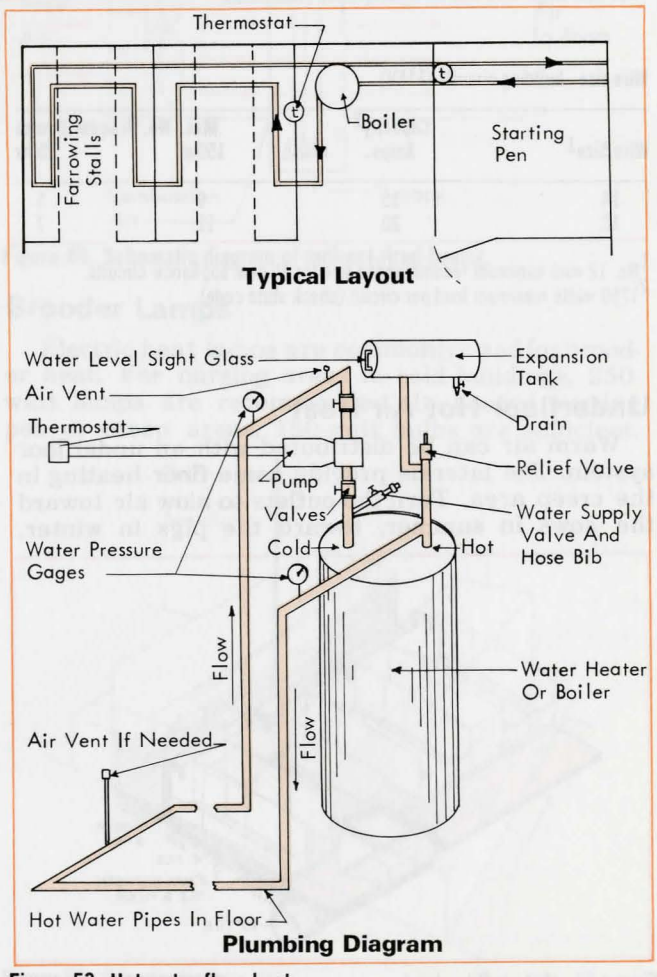


**Figure 53. Hot water floor heat.**

- Air vent to drain air out of the pipes. Provide one at the pump and one at any high spot in the hot or return lines.
- Water gauges to indicate when system needs service. Note the pressure difference when the system is new and operating properly. A decrease in the difference indicates a worn pump or air blockage. An increase indicates a blockage—sediment, or a partially closed valve.
- Thermostat with remote sensing bulb in the floor to control pump operation.

Contact a local heating contractor for assistance in installing a hot water floor heating system.

# COOLING

## Evaporative Cooling

When air passes through a wet pad it evaporates moisture, gives up heat, and is cooled. The air temperature is lowered, but the relative humidity is increased.

Evaporative cooling is most effective in the dry Southwest. In this area, evaporative cooling is relief cooling, reducing room temperatures to about 20°F below outdoors. Although not down to optimum temperatures, the reduction is significant.

In areas of higher relative humidities, cooling is less effective. But even in the central corn belt, an evaporative cooler can reduce air temperatures about 8°F. See Figure 54 for an estimate of typical temperature drop. During the hottest part of the day, humidities are apt to be at their lowest. And, the large fans required are helpful in milder weather.

## Mechanical Cooling

Mechanical air conditioning equipment has found limited use in swine production buildings. One effective system for farrowing houses using a small blower for each sow is detailed on page 25.

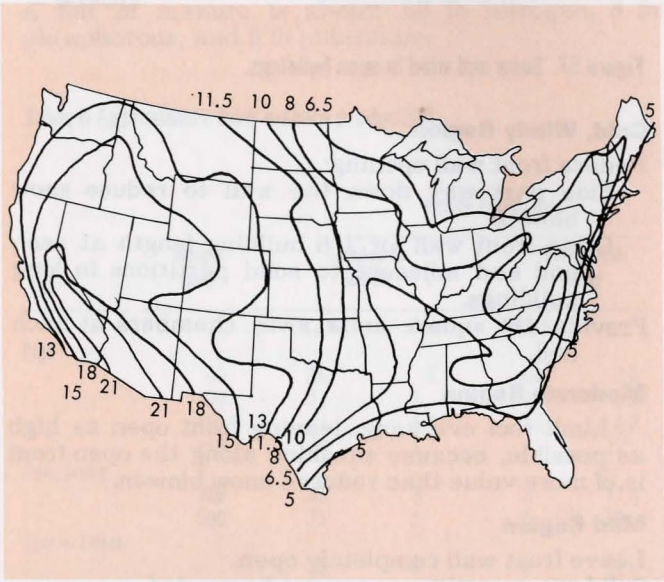


**Figure 54. Average room temperature drop from maximum outdoor July temperature.**

## Spray Cooling

Pigs can keep cool at high temperatures through evaporation of moisture from their bodies. Wet down your pigs with a spray nozzle system and intermittent spraying.

About 0.09 gallons of water per hour per pig is sufficient, or a spray capacity of 0.045 gpm per pig. If one nozzle is used in each pen:

| Pigs/Pen | Nozzle size (gpm) |
|---|---|
| 10 | 0.45 |
| 20 | 0.90 |
| 30 | 1.35 |

Select a nozzle to cover at least 3/4 the width of the pen with a solid cone of droplets—not a mist or fog. Nozzle design (spray angle and pattern) and mounting height affect the sprayed area at pig height.

Give your dealer your water analysis so he can help you select the proper nozzle. Corrosive water or water with a high hardness content can cause problems. You may need a noncorrosive nozzle that is easy to clean.

Locate the spray nozzle over the manure collection area of the pen.

Place a cleanable in-line filter and solenoid valve in the waterline between the water source and the spray line.

Install a timer between the electricity source and a thermostat. Set the timer for 2 minutes on in a 60-minute cycle. Set the thermostat at 75°.

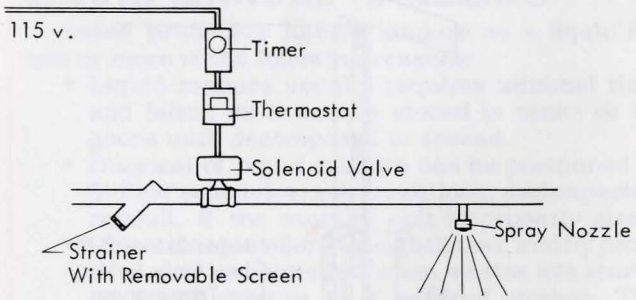


# BUILDINGS KEPT COLD IN WINTER

The building is designed to use natural air movement to maintain inside temperatures within a few degrees of outside conditions.

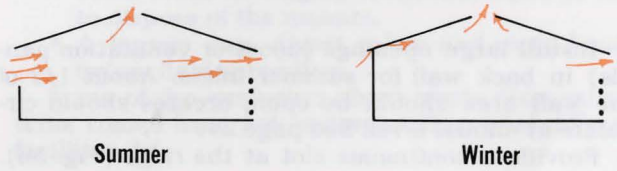

Open shelters do not require the ventilation refinements of enclosed buildings. But, provide adequate openings—inlets and outlets—for good air circulation. In cold weather air circulation prevents moisture condensation under the roof, and in hot weather, it keeps inside temperatures acceptable.

At least minimum insulation (1") is recommended in the roof. Roof the entire animal area, especially in cold and snowy regions.

## Openings

Leave front wall (S or E) open. Provide small openings in back wall (N or W) for winter inlets: 4"-6" continuous slot under eave, or equivalent (Fig. 55).

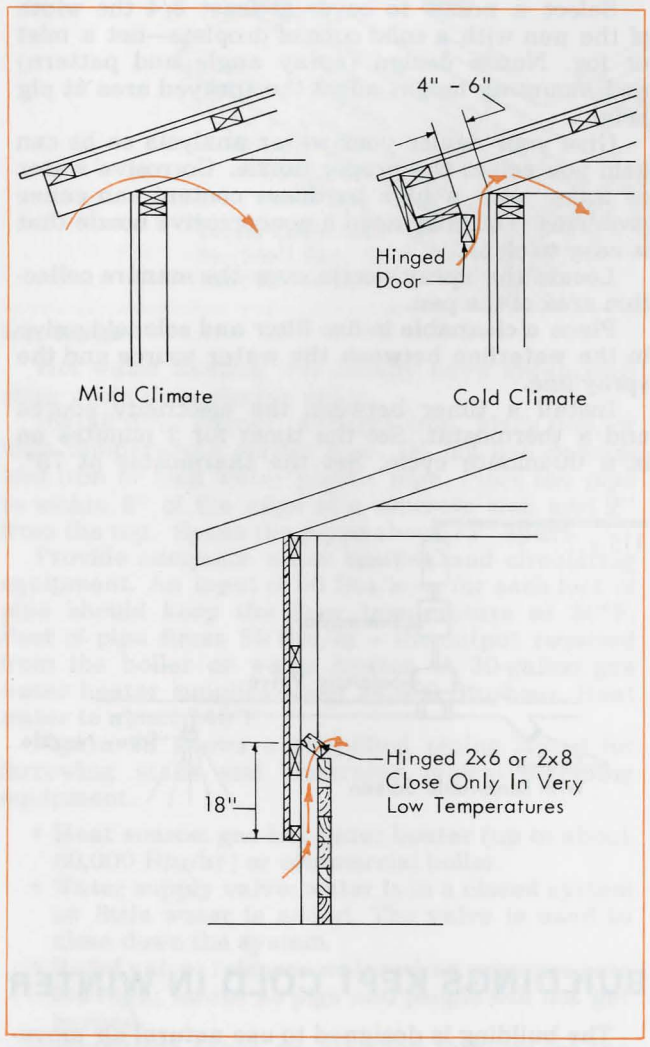


**Figure 55. Winter inlets.**

Install large openings (doors or ventilation panels) in back wall for summer inlets. About 1/2 of the wall area should be open; breezes should circulate at animal level. See page 24.

Provide a continuous slot at the ridge (Fig. 56). Slot width should be about 1" for each 10' of building width, with a 6" slot recommended in the cold zone to avoid frost accumulation.

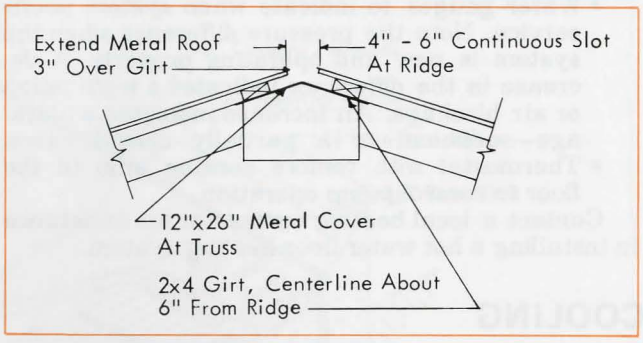


**Figure 56. Ridge outlet.**

## Snow And Wind Control

Snow drifting and cold winds can be reduced inside open-front shelters. Use local practice and experience to face the open front away from major winter storms.

Pen partitions can be solid to reduce drafts along the length of the building, but should not block summer breezes. In colder climates, some cross partitions, solid to the roof and spaced about 2-1/2 times the span apart, will reduce drafts.

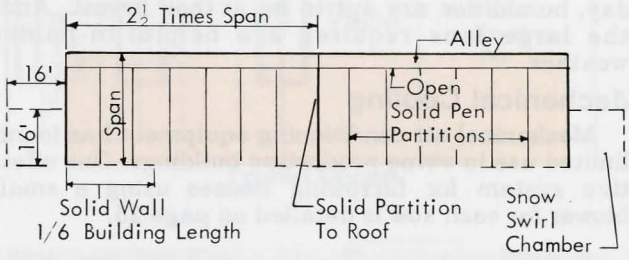


**Figure 57. Snow and wind in open buildings.**

### Cold, Windy Region

Reduce front wall opening:

- Side part way down the wall to reduce snow blow-in.
- Close front wall for 1/6 building length at each end and adjacent to solid partitions in long buildings.

Provide 16' square snow swirl chambers at each end.

### Moderate Region

Limit roof overhang, leaving front open as high as possible, because sunshine along the open front is of more value than reduced snow blow-in.

### Mild Region

Leave front wall completely open.

Solid cross-partitions may not be needed.

Roof overhang to cover feeder, or handling alley, may be provided.

# WASTE DISPOSAL

## Introduction

A complete waste disposal system is no longer a luxury in the swine business—it is a necessity. Careful waste management is needed to:

- Maintain good animal health through sanitary facilities.
- Avoid pollution of air and water.
- Comply with local, state, and federal regulations.

Swine producers generally have a choice in the method of handling wastes. Wastes are usually handled as a solid from bedded areas or drained solid floors. Semi-liquid wastes come from unbedded floors and some lots. Wastes under slotted floors are usually liquid, as is runoff from lots and manure stacks.

The method of disposal chosen depends greatly on the type of waste being handled. Solids are usually spread on fields with conventional spreaders. Liquids can be spread on fields with tank wagons, they can be applied with irrigating equipment, or they can be digested in a lagoon before field spreading. An oxidation ditch may be part of the system.

## CHARACTERISTICS OF MANURE

Approximate total daily production per 100 lb live weight is: 1/8 cu ft, 1.0 gal, 7.5 lb. Average density of manure is 59 lb/cu ft. Fertilizer value of a ton of manure is about: 10 lb nitrogen, 3 lb phosphorous, and 8 lb potassium.

**Table 6 Approximate daily manure production.**

| | Weight (lbs) | Waste Production: Liquids & Solids | | Waste Production: Wet Solids Only | |
|---|---|---|---|---|---|
| | | Cu Ft | Gal | Cu Ft | lbs |
| Pigs | | | | | |
| | 40 | .06 | .5 | .04 | 2.4 |
| | 100 | .13 | 1 | .1 | 5.9 |
| | 150 | .21 | 1.7 | .15 | 8.8 |
| | 210 | .30 | 2.2 | .2 | 12 |
| Sow, boars | | | | | |
| | 300 | .43 | 3 | .3 | 17.5 |
| | 500 | .71 | 5 | .5 | 30 |
| Sow + Litter | | .55 | 4 | .5 | 30 |

Note: The above figures are median values for undiluted, fresh manure without bedding.

## SOLID MANURE HANDLING

Solid manure results from catching and holding excrement in bedding, or by allowing the liquids to run off, leaving the solids to be handled separately.

Handling solid manure requires:

- solid floors that can be bedded or drained.
- a minimum of equipment.
- an area on which to spread the solids.

**Suggestions**

- Install sloping floors; locate waterers where manure accumulation is desired; and keep pens full of pigs.
- Haul manure directly to fields whenever possible, but avoid spreading on frozen fields.
- When a stockpile is necessary, locate it for convenient loading in a spreader, out of natural drainageways, and away from any water source. Divert surface water away from the storage area.
- Control runoff from stockpiles or feed lots; see page 38.

## LIQUID MANURE HANDLING

Swine producers handle manure as a liquid for one or more of the following reasons:

- Liquid manure usually requires minimal time and labor, as it can be stored in tanks or lagoons until decomposed or spread.
- Disposal of liquid manure can be postponed to fit field schedules, soil conditions, and expected rainfall, if the storage unit is properly sized.
- Objectionable odors, unsightliness, and fly problems can be controlled when wastes are stored as liquid manure in a covered storage. The odors that occur from spreading are infrequent, but may be more objectionable than those from solid manure.

Handling liquid manure requires the following facilities and equipment:

- Scrapers, gutters, slotted floors, or drains to move the wastes into storage.
- A storage unit to which water can be added.
- Pumps, agitators, and augers to stir and remove the liquid manure.
- Tank truck or wagon; irrigation fields or land to dispose of the manure.
- A lagoon can digest solids and store liquids before field spreading.

Some of the confusion about waste disposal systems comes from not understanding what different facilities do.

### Lagoon

A lagoon is a waste treatment unit—a digester, a unit for biochemical breakdown of organic wastes (manure, straw). Except, perhaps, in a very dry climate with high evaporation rates, excess liquids must be field spread—not released to a watercourse.

### Oxidation Ditch

An oxidation ditch is a storage unit, oxygenated to promote aerobic bacterial digestion. The purpose is usually odor control, and the effluent is still a potential pollutant.

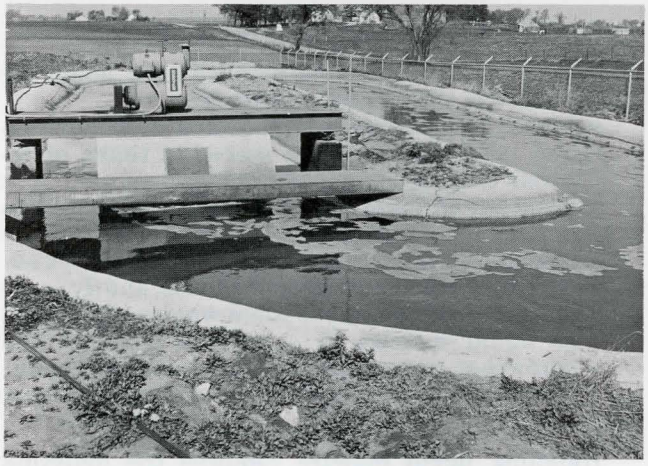

### Settling or Debris Basin

A settling or debris basin is a separating and holding unit, usually part of a runoff control system. Liquids enter the basin and slow down; the undissolved solids settle out. The liquids are slowly drained off, leaving the solids to dry for removal and field spreading. A settling basin is usually smaller and much shallower than a lagoon—it is intended to dry out.

### Holding Pond or Basin

Gutters, tanks, pits, and many "lagoons" are holding units, and any digesting that takes place is usually incidental.

## Gases From Stored Liquid Manure

Gases from agitated liquid wastes stored inside a building are hazardous and create undesirable odors. Most gas problems occur when manure is agitated or when ventilation fans fail. Most (99% or more) of the gas is methane, ammonia, hydrogen sulfide, and carbon dioxide. The remaining fraction is primarily gases that are heavier than air; many have undesirable odors.

Animals asphyxiate because methane and carbon dioxide displace oxygen. Ammonia can irritate respiratory tracts and make them more susceptible to disease.

**Methane**—Colorless and odorless; 1/2 the density of air; forms explosive mixtures with air, even when present as only 5% of the volume; acts as an asphyxiant by displacing air.

**Carbon Dioxide**—Colorless and nearly odorless; about 1-1/2 times the density of air; an asphyxiant.

**Ammonia**—Colorless with a pungent odor; about 2/3 the density of air; low concentrations irritate eyes and mucous membranes; 5000 parts per million (ppm) is a dangerous level.

**Hydrogen Sulphide**—Colorless with a rotten egg odor; slightly heavier than air; very poisonous; an irritant and asphyxiant. Concentrations of 20 to 150 ppm irritate eyes; 500 ppm for 30 minutes causes severe headaches, dizziness, excitement and staggering gait; exposure of 800 to 1000 ppm may be fatal in 30 minutes. This gas is released as agitation begins.

#### Ventilating Manure Storages

The primary hazard from manure gases occurs with inadequate ventilation.

Provide maximum building ventilation when agitating or pumping wastes from a pit. Harmful gases can be released in significant amounts; provide plenty of fresh air for workers and animals with open doors and windows, and by operating large fans.

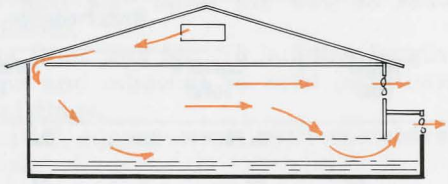

Exhaust some ventilation air from above stored liquids; even a low-volume continuous fan pulling air from above one corner of a tank will aid in reducing the accumulation of heavier-than-air gases at animal level.

Provide an alarm system (loud bell or readily noticed light) to warn of power failures in totally enclosed buildings. Tightly closed buildings can have a rapid build-up of gases at animal level that eliminate sufficient oxygen.

### Manure gases can kill

No one should enter a storage tank. However, if it becomes necessary to enter one, other persons should be present outside the tank with immediate means of removing the victim in case of the inhalation of dangerous gases. Ventilate the space over the wastes with a large portable fan if possible.

The person entering the tank should wear self-contained breathing equipment—fire-fighting or scuba gear. Chemical reaction filter masks are **not** sufficient. The person in the tank should have one end of a rope secured around his body just below the arms, with the other end secured outside the tank.

## Storage

A storage unit may be an outdoor tank or pond, or part of the livestock facility; that is, a pit under slotted floors.

Storage capacity depends on the number and size of pigs, the amount of dilution by spilled and cleaning water, and the desired length of time between emptying. Large storage units have the maximum labor advantage. Three to six months' storage capacity is desirable if manure is to be field spread, to avoid spreading on frozen or snow-covered ground, or on crops.

Storage Capacity = number of animals x daily manure production x desired storage time in days + extra water.

Cleaning swine facilities with high-pressure water may double the volume of wastes. From 1/5 to 3/5 of the storage volume may be needed for extra water if the manure is to be distributed with an irrigation system.

### Location

Locate the storage tank downhill and as far as feasible from the water supply—at least 100'.

Avoid creviced limestone, shale, and bedrock sites that might allow direct ground water pollution.

Avoid constructing tanks below the normal water table or in flood plains, to prevent tank flotation and flooding.

Locate tanks for convenient filling, emptying, and controlled addition of dilution water.

### Construction

Warning: **Obtain approval of appropriate regulatory agencies prior to starting construction.**

Midwest Plan Service plan #74303 (Liquid Manure Tanks, $1.00) can be obtained from the extension engineers listed inside the front cover. It gives construction details for rectangular reinforced concrete storages.

Cast-in-place concrete is recommended. Insulate the exterior of tank walls with waterproof insulation in cold climates. When construction is completed clean out chips, nails, lumber and other foreign material. As soon as possible after construction, add water to counteract the uplifting forces caused by external hydrostatic pressures. A high water table can "float" an empty tank.

Protect necessary tank openings with grills and/or covers to prevent children, animals, equipment or other objects from falling in. Provide removable grills in only those openings used for stirring and pumping equipment. Use grills and covers which cannot fall into the tank, and which discourage unnecessary removal.

Provide a permanent ladder or steps below all openings that have a minimum dimension of 15" or larger, for emergency escape in case of accidental entry.

Where gases may discharge into a building, provide adequate ventilation. If possible, evacuate the building during agitation prior to cleaning.

Especially where wastes are stored in a building, and to minimize corrosion, locate the electrical entrance outside the building, and as much wiring and fixtures as possible above the ceiling or behind a vapor barrier.

### Filling Liquid Manure Storages

Add water to the unit before filling it with manure. Add 3"-4" to pits under slotted floors; add 6"-12" if the unit will be loaded with batches of scraped wastes.

Keep the openings in covered tanks closed when not in use, and maintain a program of fly control, utilizing bait, insecticides, and repellants. Fly reproduction can be discouraged by keeping all solids submerged.

Scrape wastes into a gutter or storage unit frequently to keep them wet. Dry wastes may be difficult to reliquify. For floor flushing, high pressure water is needed to do a good job—100 psi to a nozzle using 5 to 10 gpm.

The tank filling period will be increased if some of the stored liquid can be drained to a lagoon or holding basin.

Frozen manure, fibrous material, and debris may interfere with agitation or pumping, and should be kept out of the tank.

### Maintenance

Periodic inspection should be made of the tank and its surroundings for leaks, deterioration of grills, covers, and ladders, and adequacy of the roof. Some tanks have covers strong enough to drive on; others have relatively weak covers. A vertical distance from ground to lid of about 18" will discourage traffic; maintain this vertical separation.

### Gutters And Pits

#### Narrow Gutters

Wastes from solid floors can be washed or scraped to this type of storage for short holding periods. The outlet is usually 6" bell tile with a plug (Fig. 69, p 42). When the gutter is full (usually 3 days to 1 week), the plug is pulled, and the manure flows by gravity to an outside storage or lagoon.

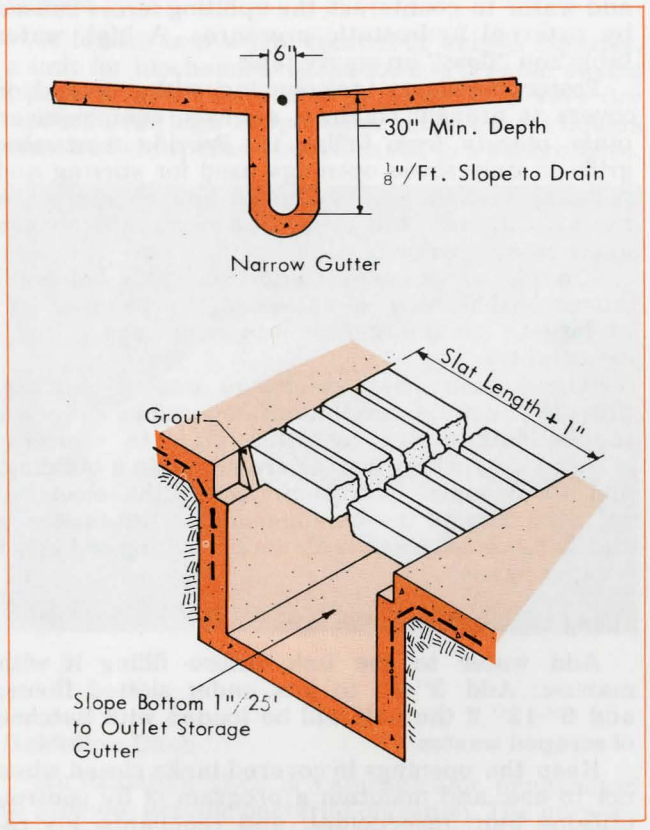


**Figure 58. Manure storage gutters.**

### Partially Slotted Floor

With slats over storage gutters, the floors are solid in the feeding area and alleys. Slope solid floors toward gutters. Solid floor sections more than about 16' long tend to get dirty. A solid section permits limited feeding on the floor to help keep pens clean, or permits under-floor heat in a farrowing or nursery area.

### Completely Slotted Floor

The whole floor is usually laid level. Partitions can be located in any position. It is easy to move alleys or adjust pen sizes, to meet changing needs or management. Most feed dropped on a slotted floor is wasted. Cover part of the floor and/or use feeders with feed flow control.

### Oxidation Ditch

The basic components of an oxidation ditch are a storage unit and a means of adding oxygen, usually with a paddle-wheel that drives the liquid and adds oxygen by splashing. As commonly used, an oxidation ditch is an odor-reducing device for liquid wastes stored in a building, usually under slotted floors. The effluent is still a pollutant to be disposed of as liquid manure. Excess sludge must occasionally be removed.

For design data and a more complete discussion, get AED-14, "Oxidation Ditch for Treating Hog Wastes" (single copies free) from one of the extension engineers listed inside the front cover.

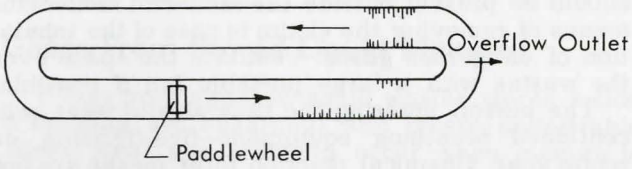


## Emptying Liquid Manure Storage

### Agitation

Because some solids settle, agitate stored manure just before emptying. Effective agitation is possible with recirculating pumps operating at about 2000 gpm in storages with ports about 30' apart.

Agitation is usually not needed for narrow gutters. Open the outlet or plug and run wastes to a larger storage tank, lagoon, or holding pond about twice a week. Paddle agitators are usually effective only in smaller tanks. Augers are sometimes used, but are usually not too effective.

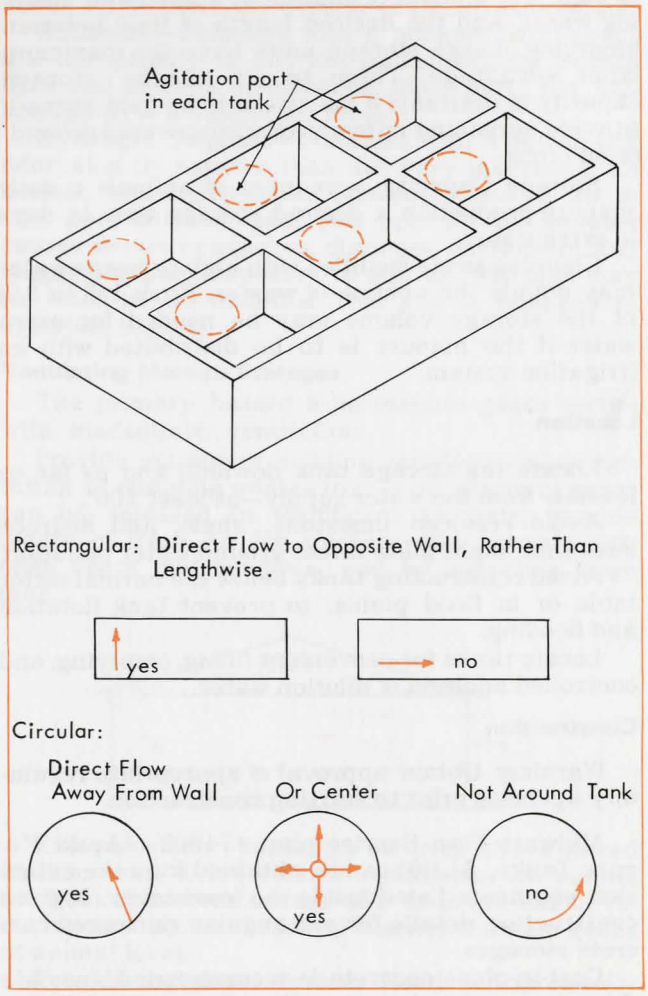


**Figure 59. Agitator locations.**

Provide For Access With Agitation Equipment About Every 30' Of Tank.

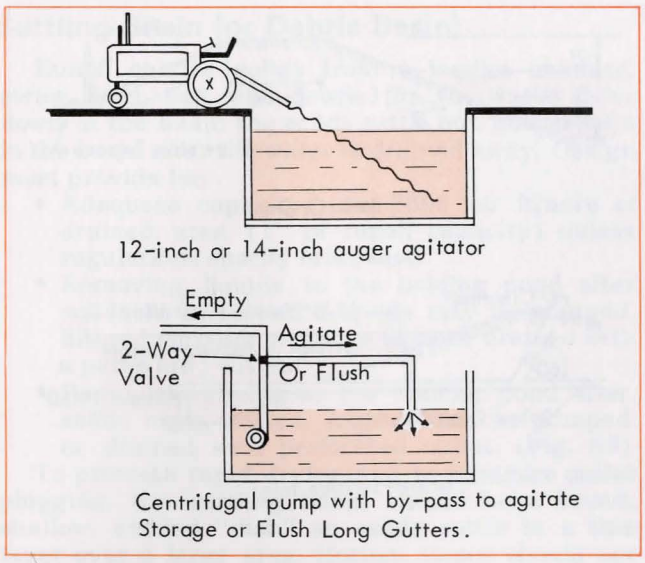


**Figure 60. Agitators.**

Gases escaping from agitated manure may be harmful to animals and humans. Operate all ventilation fans, and open doors and windows, when agitating and unloading manure storages.

Remove agitated manure with pumps, augers, or gravity flow to tank wagons, irrigation lines, a lagoon, or a holding pond.

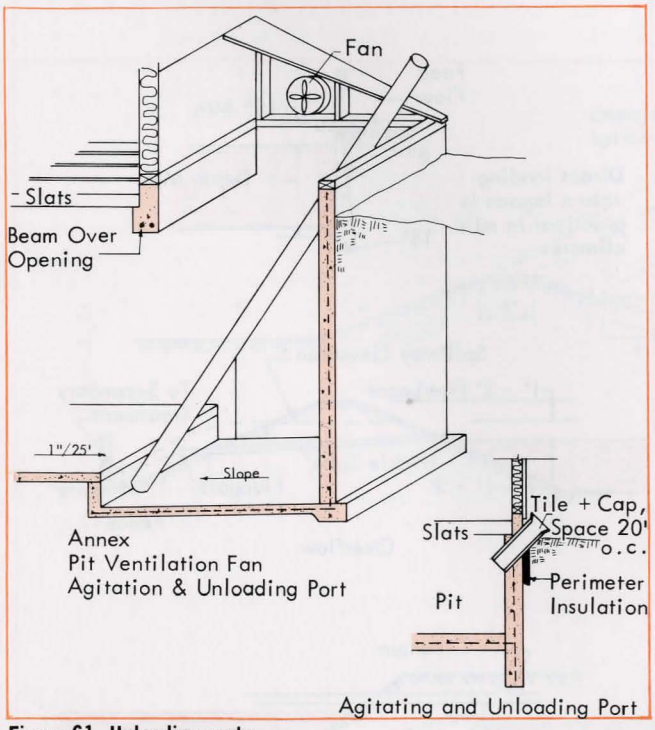


**Figure 61. Unloading ports.**

### Adding liquid

Where liquid wastes must be hauled in a tank, it is desirable to minimize the volume to be hauled. Because it takes a lot of water to reduce the percentage of solids significantly, pump as much of the wastes as possible, then dilute what is left.

### Pumps

Many types and sizes of pumps can handle liquid manure.

**Pump on a wagon** creates a vacuum within the wagon to suck the liquid from storage; it also creates pressure within the wagon for unloading. Small storage units can sometimes be agitated satisfactorily by partially filling the wagon, then reversing the pump and emptying the wagon back into the tank.

**Centrifugal pump** without choppers is submerged in the manure and can pump into a tank wagon, holding pond, or irrigation system. Pump sizes range from 1-1/2 to 5 horsepower and deliver up to 2000 gpm. Bedding may clog centrifugal pumps without choppers. Some pumps have a by-pass for agitation.

**Chopper-impeller pumps** handle manure containing chopped bedding. Typical sizes range from 5 to 30 hp and deliver 300 to 2500 gpm. Some have a by-pass for tank agitation.

**Diaphragm and helical screw pumps.** A 2 hp pump will lift 50 to 70 gpm, and can handle thick slurries.

**Augers** are not very efficient for moving liquids. They are commonly powered with PTO-driven hydraulic motors. One-to-5 hp motors lift 40 to 180 gpm through 4"-6" augers. An auger with close tolerences between screw and housing, operated at about 1500 rpm, is usually necessary.

## Disposal of Liquid Manure

### Field Spreading—Tank Wagon

Keep extra water to a minimum if the manure will be spread with a tank wagon. Wagon tanks are available in sizes of 750 to 3000 gallons. The tires for the wagon should be of wide floatation design to minimize damage to a field. An agitator in the tank improves uniform delivery and reduces plugging.

### Field Spreading—Irrigation Equipment

Liquid manure should be less than 5% solids and thoroughly agitated for irrigation. Contact your County Extension Director or consult your state's agricultural engineers for irrigation designs.

### Lagoons

A lagoon with 2 cu ft capacity per pound of live hog will digest all the liquid and solid wastes coming from the production buildings. In figuring lagoon capacity needed, use the maximum total weight of the animals on the farm at any one time. Also allow for adequate holding capacity—after excess liquids have been removed in the fall before the ground is frozen, there must be enough storage capacity to permit filling the lagoon all winter until fields are thawed in the spring.

If lot runoff goes into a lagoon, adequate capacity for rainfall on the lot must be included in the design in addition to wastes from buildings. It is usually cheaper to provide plenty of capacity while the lagoon is first being built than to try to add capacity later.

Anaerobic lagoons should be at least 5' deep, but 10' or more is desirable. For the same storage capacity, a deep lagoon has less surface area than a shallow one. Also, a deeper lagoon has more uniform liquid temperatures, which is desirable for bacterial growth.

The bank or dam is built 2'-3' higher than the expected water level. Figure 62 illustrates desired bank slopes and other features.

**Inlets**

Discharge near the center of the lagoon, or about 20' from the bank of a large lagoon.

Below-the-surface: requires some water pressure; because trickle loading may plug at the water line, batch loading from a full storage or gutter works best.

Above-the-surface: pipe may freeze in winter and plug in summer; batch loading works best.

Combination: if the lower pipe plugs wastes will discharge through the upper.

Open concrete trench: easily cleaned, but freezing may be a problem.

Cleanouts: install cleanouts about every 200' along the sewer line.

**Overflow**

Provide an emergency spillway 1'-2' below the top of the dam leading to secondary treatment or disposal.

A trickle tube will handle overflow except during exceptionally heavy rain and perhaps during spring thaw.

Lagoon overflow can pollute; it should flow to a holding pond for field spreading or to a grassed disposal field. A sod field can accept about an inch of effluent at a time, if permitted to dry out between applications (2 weeks or more).

## RUNOFF CONTROL – OPEN LOTS

Runoff can cause pollution, and is therefore being regulated in several states. The following discussion will aid in selecting an adequate system if you have no regulation that must be followed.

Locate the feedlot to minimize problems, if possible.

- Locate feedlots away from streams; at least far enough to permit construction, maintenance, and operation of adequate detention structures.
- Locate the lot at or near the top of a slope, to reduce outside drainage crossing the lot.
- Consider area conditions before building—neighbors, towns, zoning, your own residence.

Avoid as much runoff as possible.

- Consider roofing open lots and animal passageways to keep rain and snow separate from livestock wastes.
- Divert all drainage from outside the lots, so only the rain which falls on the lot becomes polluted.
- Build lots no larger than necessary for your herd size.

Provide a two-unit runoff control system: a **settling basin** to settle out and catch solids, and a **holding pond** to hold the liquids until field spreading.

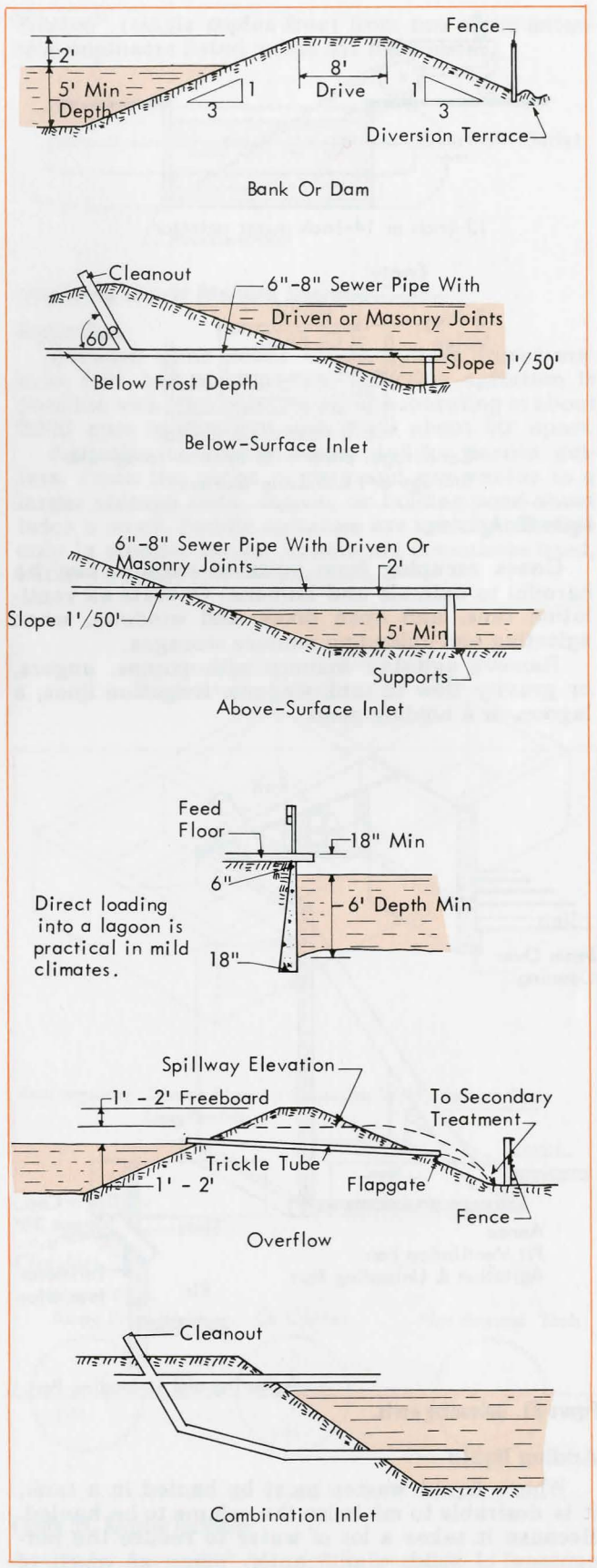


**Figure 62. Lagoon construction.**

## Settling Basin (or Debris Basin)

Runoff carries solids from a feedlot—manure, straw, feed, soil, and debris. As the water slows down in the basin the solids settle out, and remain in the basin after the water is drained away. Design must provide for:

- Adequate capacity; use 3600 cu ft/acre of drained area (1" of runoff capacity) unless regulations specify otherwise.
- Removing liquids to the holding pond after solids have settled. Liquids may be pumped, filtered through a porous dam, or drained with a perforated outlet.
- Removing liquids to the holding pond after solids have settled. Liquids may be pumped or drained with perforated outlet. (Fig. 63)

To promote rapid drying and to minimize outlet plugging, the settling basin should be a broad, shallow, sodded "dish" so solids settle in a thin layer over a large area. Bottom slopes should not exceed 1'/10'. In some areas and on some soils, a paved settling basin may be more satisfactory.

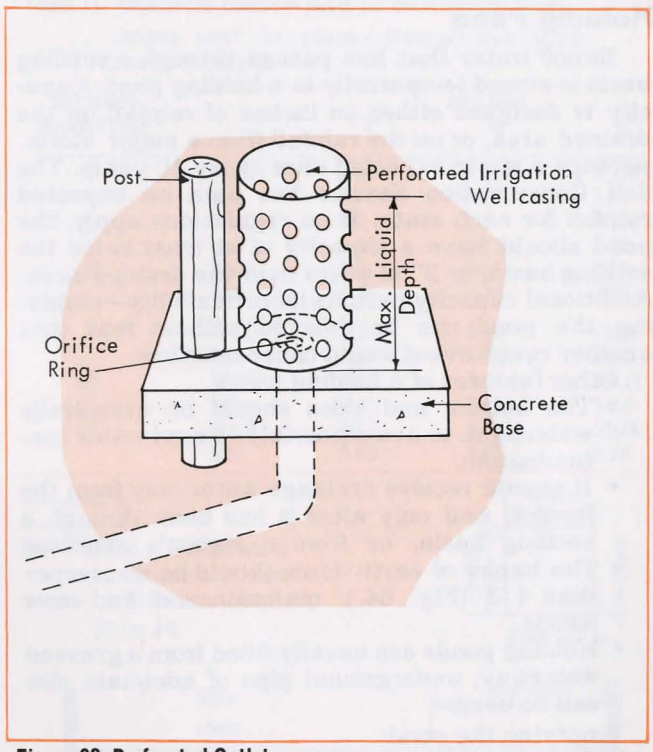


Figure 63. Perforated Outlet.

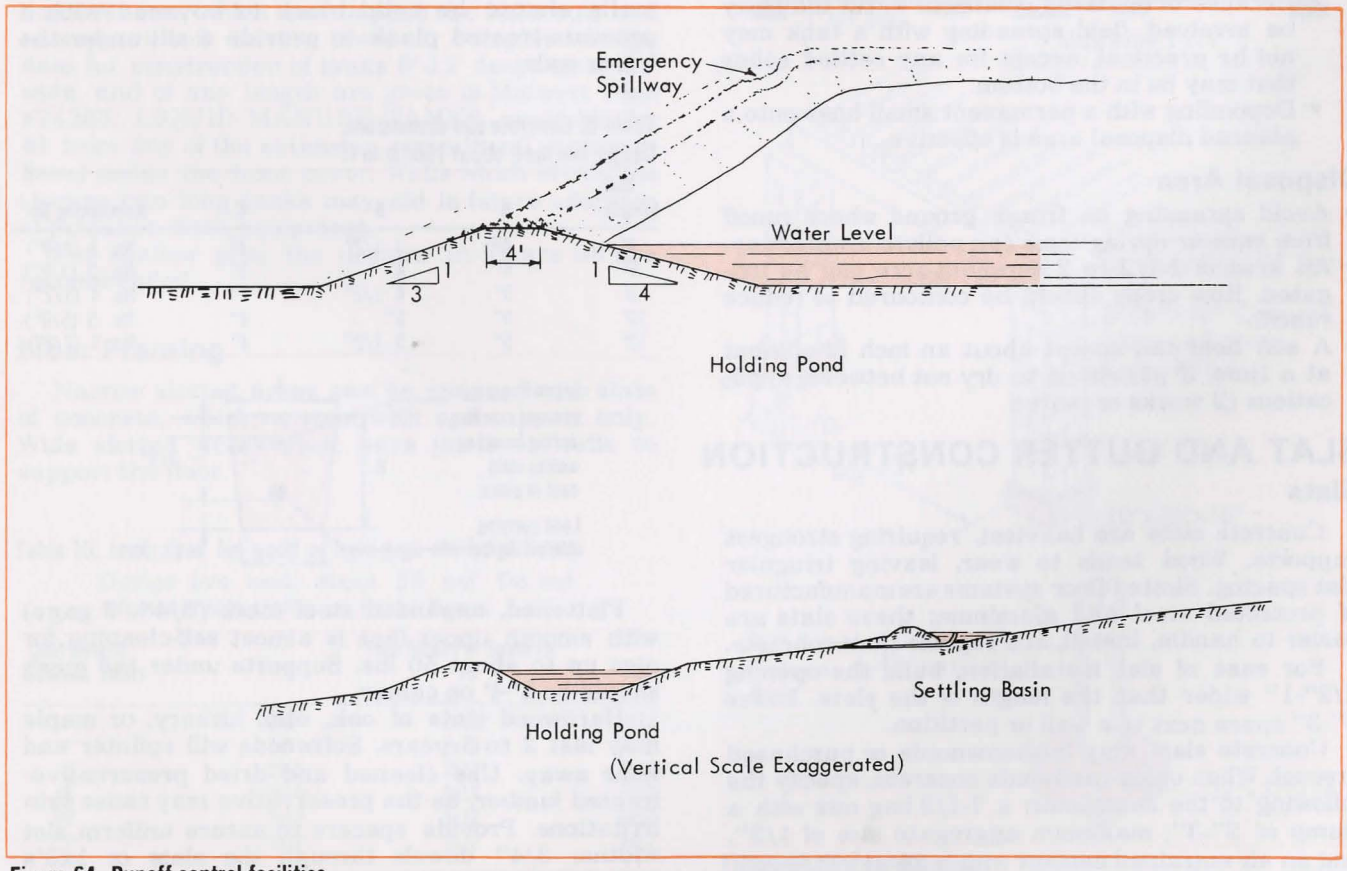


Figure 64. Runoff control facilities.

## Holding Pond

Runoff water that has passed through a settling basin is stored temporarily in a holding pond. Capacity is designed either on inches of rainfall on the drained area, or on the rainfall from a major storm, perhaps a storm expected once every 10 years. The Soil Conservation Service has data on expected rainfall for each state. If no regulations apply, the pond should have a capacity of at least twice the settling basin, or 2" of water over the drained area. Additional capacity permits labor flexibility—emptying the pond can be delayed without fear that another runoff event would cause overflow.

Other features of a holding pond:

- The bottom and sides should be essentially watertight, to avoid possible ground-water contamination.
- It should receive drainage water only from the feedlot, and only after it has been through a settling basin, or from a lagoon's overflow.
- The banks of earth dams should be no steeper than 1:3 (Fig. 64.); maintain sod and mow weeds.
- Holding ponds are usually filled from a grassed waterway; underground pipe of adequate size can be used.

Emptying the pond:

- Empty the pond within 2 to 3 weeks to provide capacity for the next storm.
- Irrigation, by either gravity flow or pumping, is relatively low in labor requirement.
- Because of the large volume of water that may be involved, field spreading with a tank may not be practical, except for any settled solids that may be in the bottom.
- Deponding with a permanent small hose onto a planned disposal area is effective.

## Disposal Area

- Avoid spreading on frozen ground where runoff from rain or spring thaw can pollute a waterway.
- An area of 1-1/2 to 2 acres/lot-acre can be irrigated. Row crops should be contoured to reduce runoff.
- A sod field can accept about an inch of effluent at a time, if permitted to dry out between applications (2 weeks or more).

# SLAT AND GUTTER CONSTRUCTION

## Slats

Concrete slats are heaviest, requiring strongest supports. Wood tends to wear, leaving irregular slat spacing. Slotted floor systems are manufactured of protected steel and aluminum; these slats are easier to handle, install, and replace than concrete.

For ease of slat installation, build the opening 1/2"-1" wider than the length of the slats. Leave 2"-3" space next to a wall or partition.

Concrete slats may be homemade or purchased precast. When using ready-mix concrete, specify the following to the contractor: a 7-1/2 bag mix with a slump of 2"-3"; maximum aggregate size of 1/2", and an air entrained cement with a 28-day strength of at least 3500 psi.

**Table 7. Recommended slot widths (slotted floors).**

| | |
|---|---|
| New-born pigs[1] | 3/8" & 1" |
| 25 to 40 lb[2] | 1" |
| 40 to market, and farrowing | 1" |

[1]Cover openings with plywood, sheet metal or mesh during farrowing. Use 1" slots behind sow; Use 3/8" slots elsewhere.
[2]3" width preferred over wider widths.

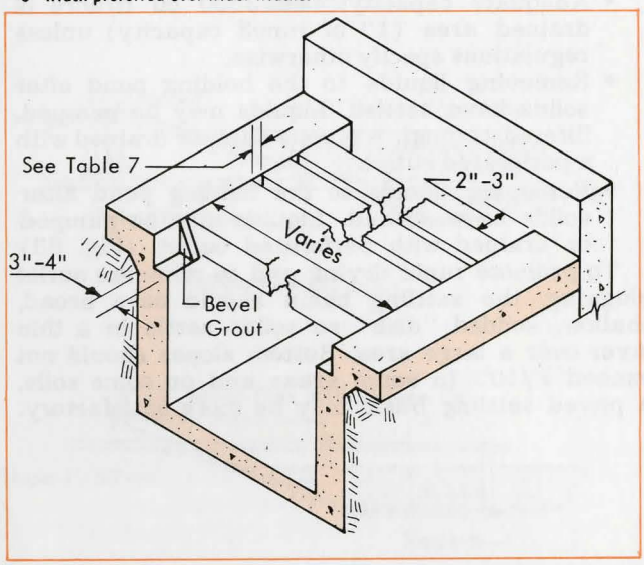


**Figure 65. Slats over gutter.**

Concrete slats are usually supported on concrete piers or masonry walls. The top course of masonry walls should be solid block or covered with a pressure-treated plank to provide a sill under the beam ends.

**Table 8. Concrete slat dimensions.**
Design live load; about 100/lb In ft

| Slat Length | A | B | C | Reinforcing Bar |
|---|---|---|---|---|
| 4' | 4" | 3 1/2" | 3" | No. 3 (3/8") |
| 6' | 4" | 4" | 3" | No. 3 (3/8") |
| 8' | 5" | 4 1/2" | 4" | No. 4 (1/2") |
| 10' | 5" | 5" | 4" | No. 5 (5/8") |
| 12' | 5" | 5 1/2" | 4" | No. 7 (7/8") |

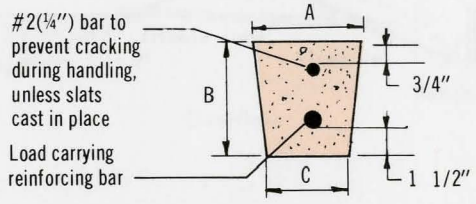


Flattened, expanded steel mesh (3/4", 9 gage) with smooth upper face is almost self-cleaning for pigs up to about 50 lbs. Supports under the mesh should be 3'-4' on center.

Hardwood slats of oak, elm, hickory, or maple may last 2 to 5 years. Softwoods will splinter and wear away. Use cleaned and dried preservative-treated lumber, as the preservative may cause skin irritations. Provide spacers to assure uniform slot widths; 3/4" dowels through the slats or 1x3's nailed to the top surface, 3'-4' apart.

**Table 9. Wood slat dimensions.**

| Length | A | B | C |
|---|---|---|---|
| 4′ | 2″ | 2 1/2″ | 1 3/4″ |
| 6′ | 2 1/2″ | 3″ | 2″ |
| 8′ | 3″ | 3 1/2″ | 2 1/4″ |
| 10′ | 3 1/2″ | 4″ | 2 1/2″ |

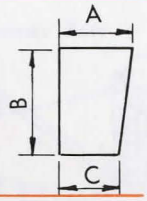


Maximum length of a rough 2x4 flat is 6′, and of a dressed 1x2 flat is 1 1/2′.

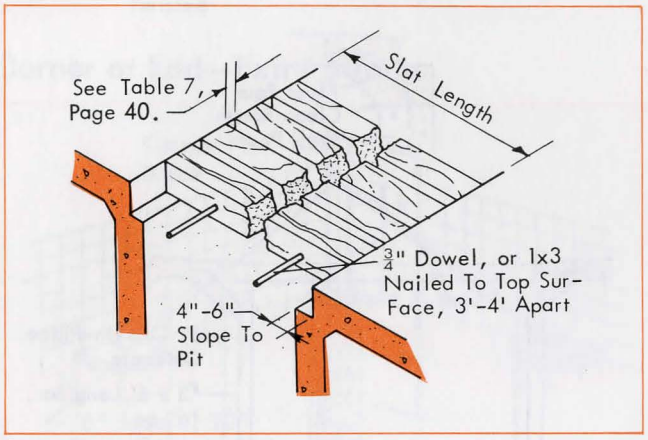


**Figure 66. Wood slat construction.**

## Walls For Storage Tanks

Liquid storage tanks need strength to hold the liquid wastes, which tend to push the walls out, and to support soil outside the wall. Complete design data for construction of tanks 6'-12' deep, up to 24' wide, and of any length are given in Midwest Plan #74303, LIQUID MANURE TANKS, available for $1 from any of the extension agricultural engineers listed inside the front cover. Walls which divide the storage into long tanks may aid in future adoption of oxidation ditch equipment.

For shallow pits, the designs in Figure 68 are recommended.

## Floor Framing

Narrow slotted areas can be spanned with slats of concrete, wood, or steel with end support only. Wide slotted areas must have joists or walls to support the floor.

**Table 10. Joist sizes for wood or light-gage steel slat floors.**

Design live load; about 55 psf. Do not allow vehicle traffic on these floors.

| Slat Length Between Joists | Joist Sizes For Spans Of 8′ | 10′ | 12′ |
|---|---|---|---|
| 4′ | 2x8 | 2x10 | 2x12 |
| 5′ | 2x8 | 2x10 | 2x12 |
| 6′ | 2x10 | 2x12 | 3x12 |
| 8′ | 2x10 | 3x12 | 3x12 |
| 10′ | 2x12 | 3x12 | 4x12 |
| 12′ | 2x12 | 3x12 | 4x12 |

**Table 11. Reinforced concrete joists for concrete-slat floors.**

Joists cast in place. Design live load; about 125 psf.

| Slat length Between joists | | Joist span 8′ | 10′ | 12′ |
|---|---|---|---|---|
| 4′ | W x D | 8″x8″ | 8″x10″ | 9″x12″ |
| | bars | 2-#4 | 3-#4 | 3-#5 |
| 5′ | W x D | 8x8 | 8x9 | 9x12 |
| | bars | 2-#5 | 3-#5 | 3-#5 |
| 6′ | W x D | 8x9 | 8x10 | 9x11 |
| | bars | 2-#5 | 3-#5 | 3-#6 |
| 8′ | W x D | 8x9 | 8x11 | 10x12 |
| | bars | 3-#4 | 3-#5 | 3-#6 |
| 10′ | W x D | 8x10 | 9x12 | 10x13 |
| | bars | 3-#5 | 3-#5 | 3-#6 |
| 12′ | W x D | 8x12 | 9x13 | 10x14 |
| | bars | 3-#5 | 3-#5 | 3-#6 |

W = width, in.
D = depth, in.
bars = number of bars and size of bars in bottom of beam.
cover = 1 1/2″ for sizes through #5, 2″ for #6.

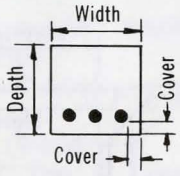


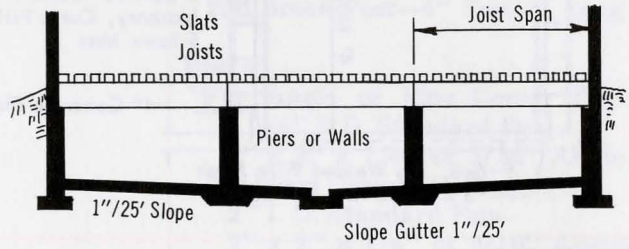


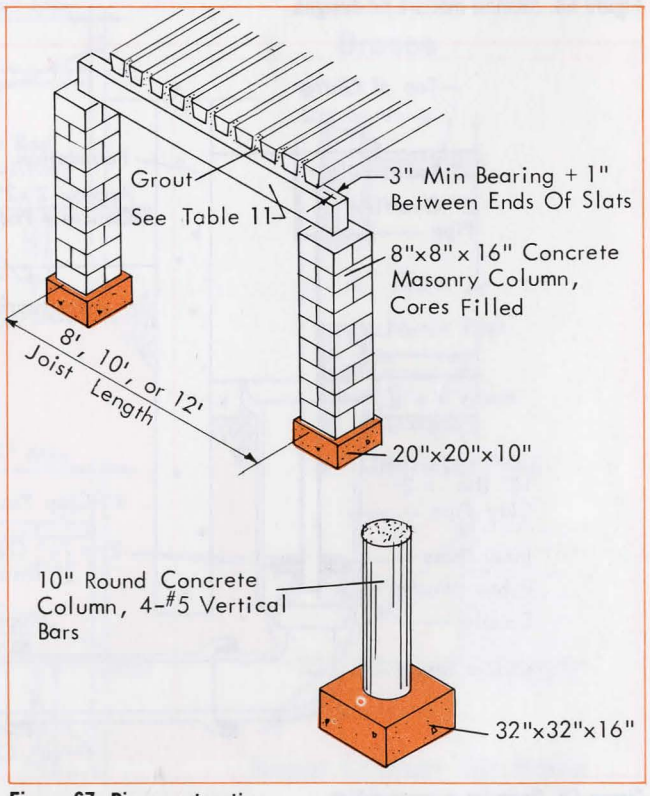


**Figure 67. Pier construction**

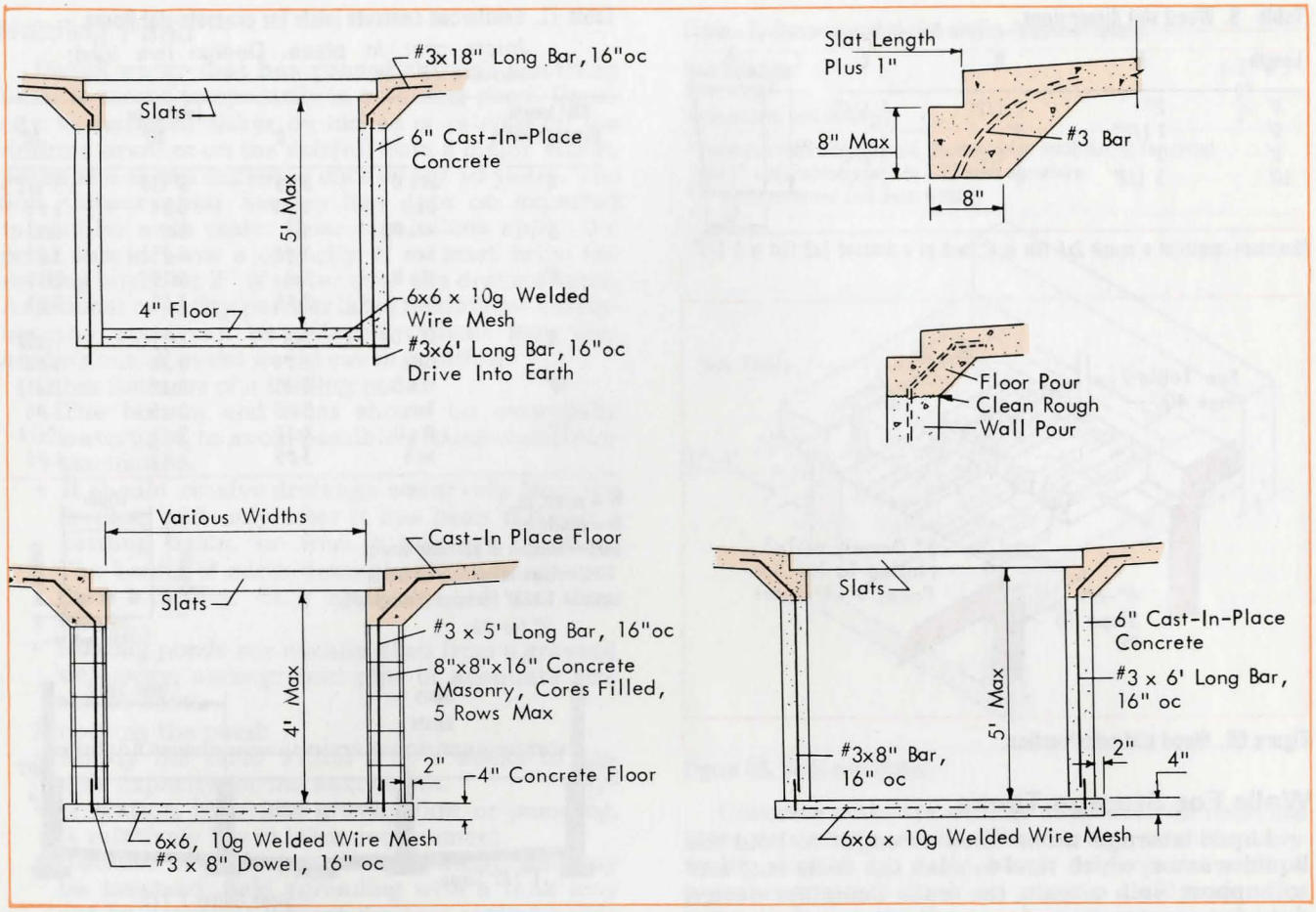


**Figure 68. Shallow manure pit designs.**

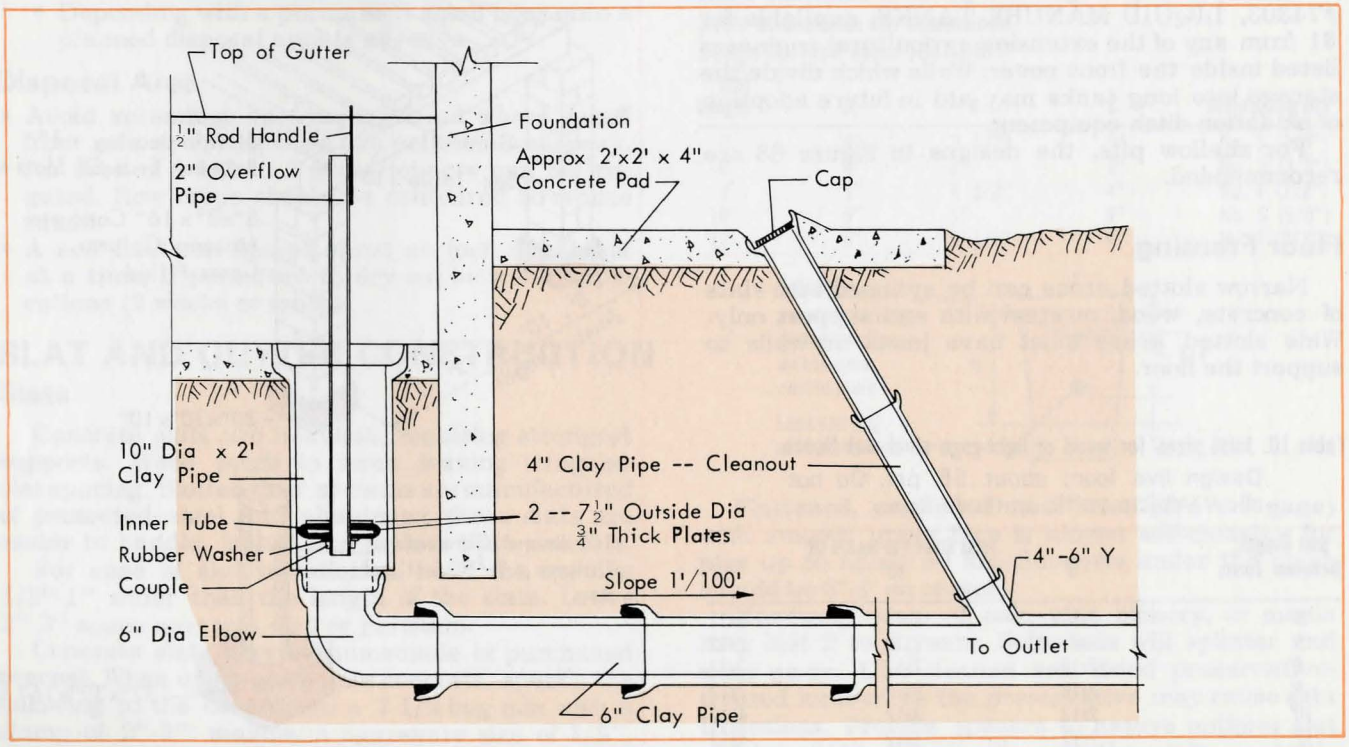


**Figure 69. Drain for manure gutter.**

# FENCING

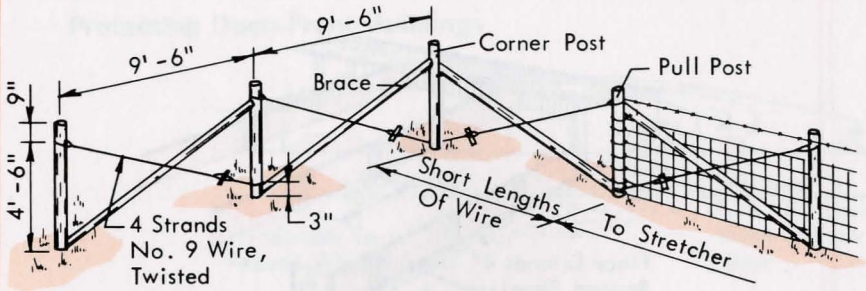


**Corner or End—Extra Strong**

## CONSTRUCTION STEPS

This extra strong fence corner, or end, is good in soft soils, or where deadman on corner post would otherwise be necessary.

1. Set all fence posts.
2. Install bracing.
3. Fasten wire to second post.
4. Tighten from second post, and complete line fence.
5. Using short lengths of wire, close corner.

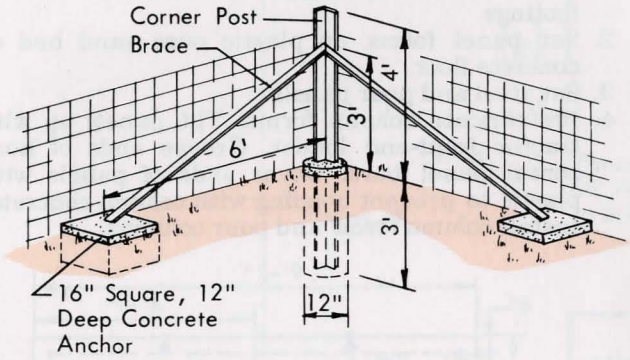


**Corner or End-Steel Posts**

## POST SIZES

**End Post** Min. Sizes
2 1/2" x 2 1/2" x 1/4" Angle
2" I. D. Standard Pipe
5" Top Wood Post—8' Long

**Brace Post** Min. Size (Wood)
1st Brace Post—5" Top, 8' Long
2nd Brace Post—4" Top, 8' Long

**Brace**
For Angle or Pipe Corner Post
1 1/4" I. D. Standard Pipe
2" x 2" x 1/4" or 3/16" Angle
For Wood Corner Posts
2" I. D. Standard Pipe
2" x 2" x 1/4" or 3/16" Angle

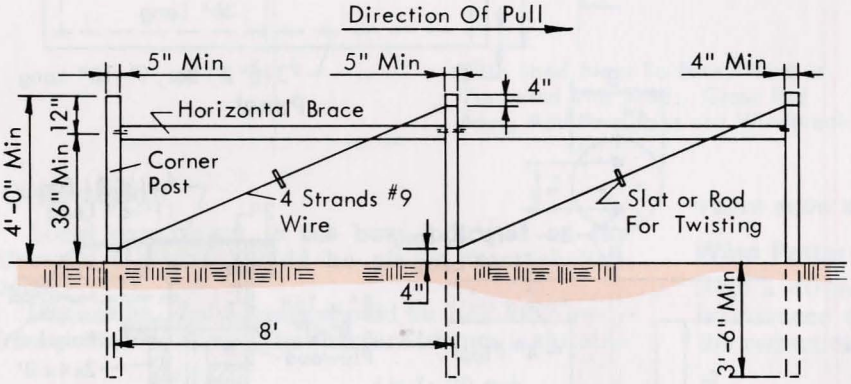


**Wood Pull Post**

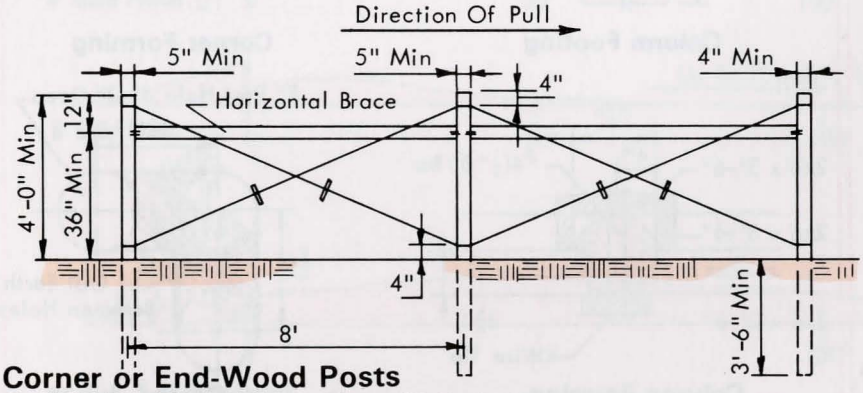


**Corner or End-Wood Posts**
**For Middle of Long Fence, Place 40 Rods Apart**

## Braces

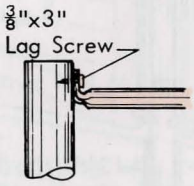


**2" Pipe**

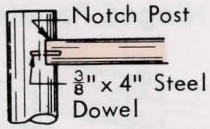


**3" Diameter Pole**

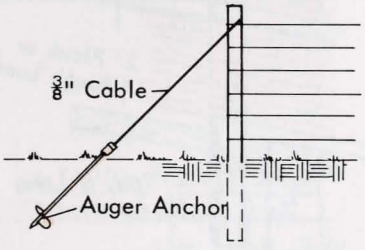


**Auger-Anchors Can Brace Corners & Ends**

## FENCE DIMENSIONS

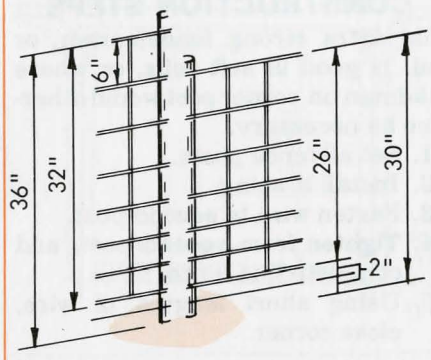


**36" Fence** **30" Fence**

30" Fence: Can climb over. High enough for temporary fence & between pens where pigs can see each other.

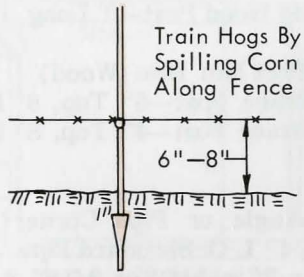


**Electric Fence**

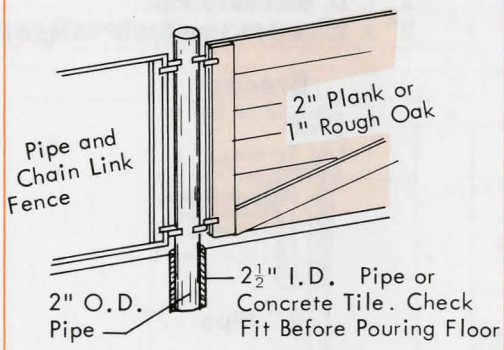


**16' Hinged Panels**

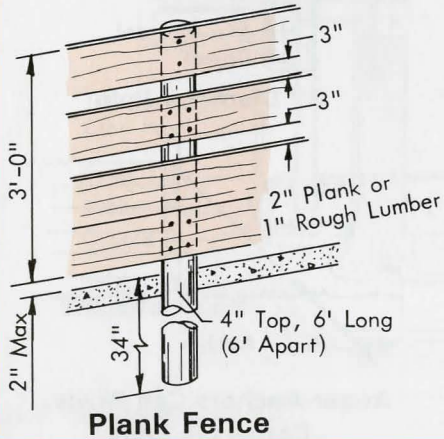


**Plank Fence**

## TILT-UP CONCRETE FENCE

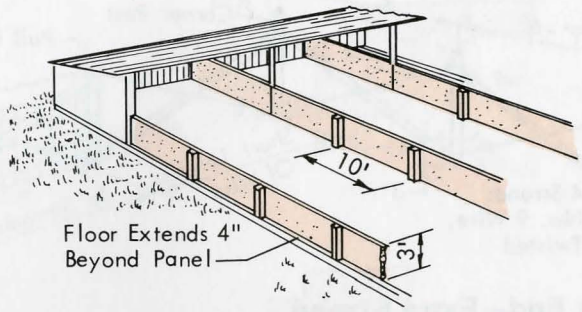


### CONSTRUCTION STEPS

1. Drill holes for footings. Set vertical steel. Pour footings.
2. Set panel forms on plastic over sand bed or concrete floor.
3. Set steel and pour panels.
4. Prefabricate column forms. Tilt panels up with tractor front-end loader. Grease ends of horizontal panel bars. Cover ends of panels with plastic to prevent bonding with column concrete. Install column forms and pour columns.

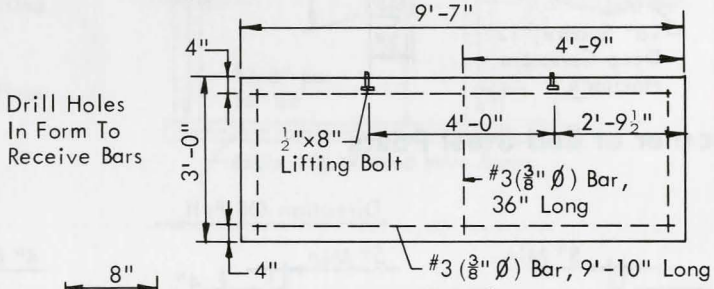


**Panel**

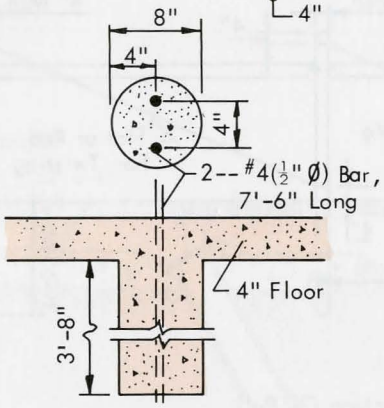


**Column Footing**

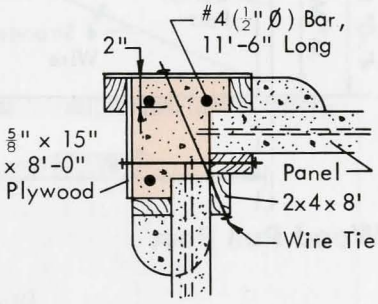


**Corner Forming**

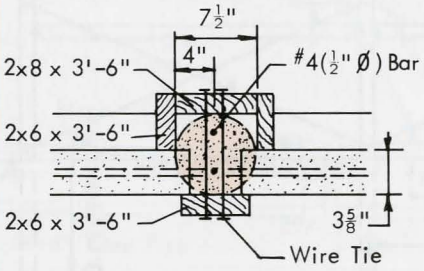


**Column Forming**

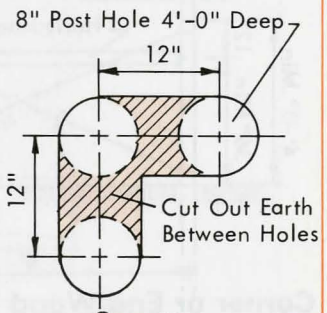


**Corner**

# WINDBREAK PLANNING

## Protecting Open-Front Buildings

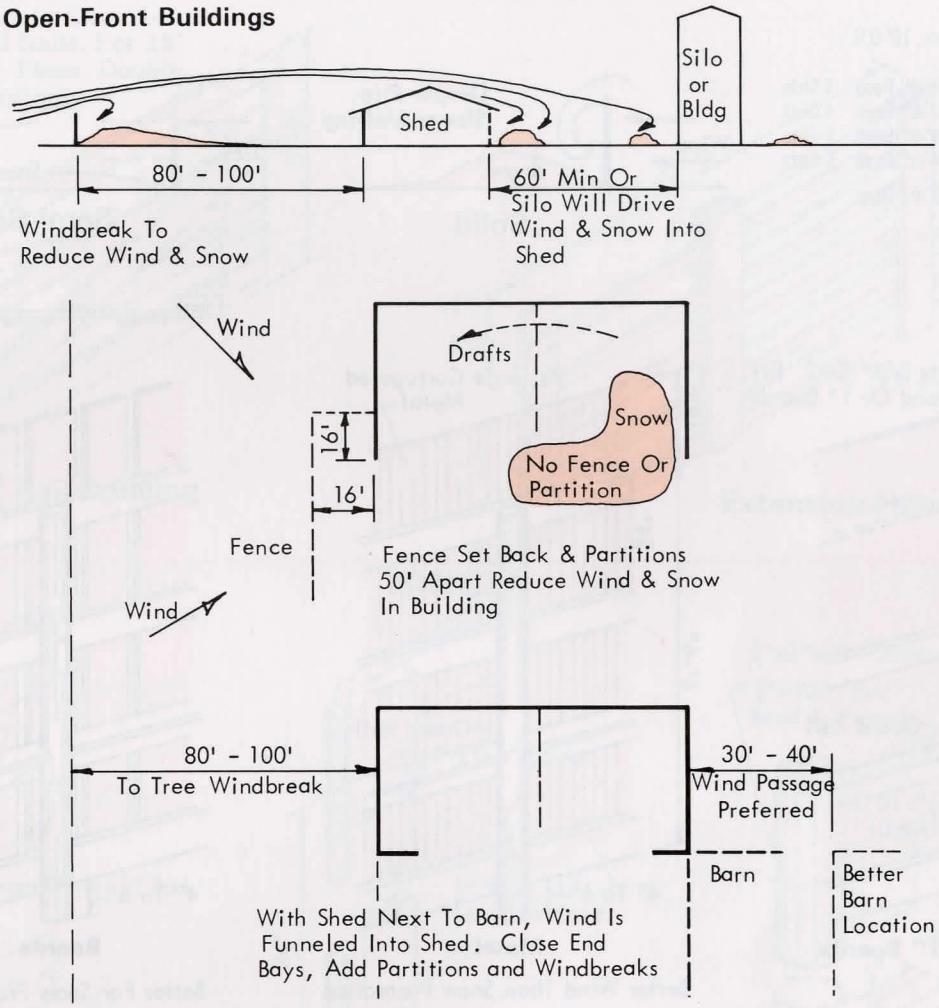


## Orientation

Local experience is the best indicator on the distance facilities should be placed from shelterbelts.

Generally, shelterbelts should be 100'-300' away from protected areas. The shorter distance is suitable where snow accumulation is less severe.

### Wind Patterns

With a 40 m.p.h. wind from the left, velocities will be reduced to about those shown. For other speeds the reductions will be proportional.

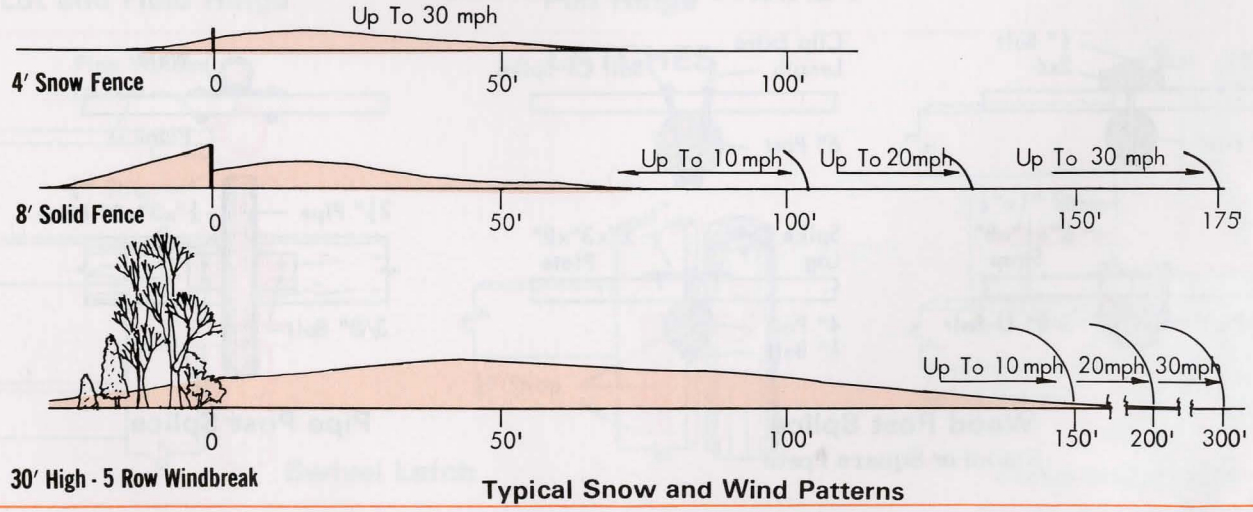


Typical Snow and Wind Patterns

# WINDBREAK FENCES

POLES—6" Top Diam., 10' O.C.

| | | | |
|---|---|---|---|
| 6' Fence | 8' Poles | 3'-6" Deep | 3 Girts |
| 8' Fence | 10' Poles | 3'-6" Deep | 4 Girts |
| 10' Fence | 12' Poles | 4'-0" Deep | 5 Girts |
| 12' Fence | 14' Poles | 4'-0" Deep | 6 Girts |
| 8' Snow Fence | 12' Poles | 4'-0" Deep | |

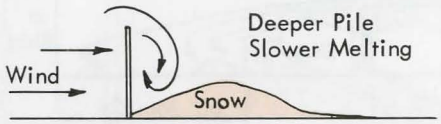


**Solid**

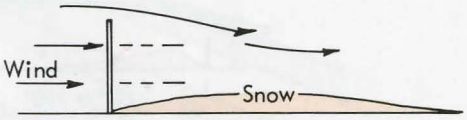


**Semi-Solid**

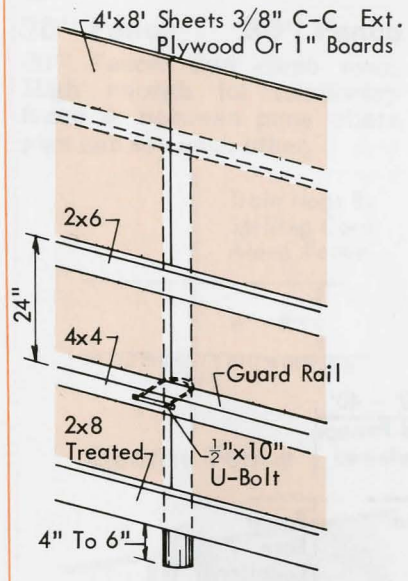


**Plywood or 1" Boards**

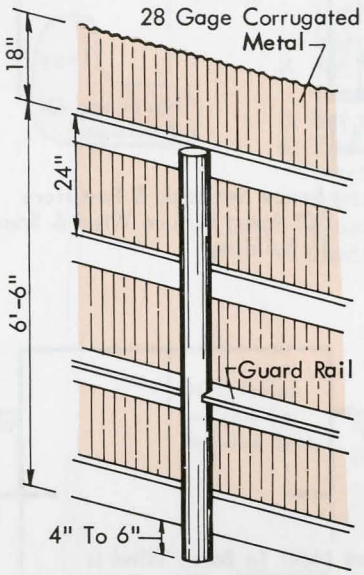


**Metal**

Better Wind Than Snow Protection

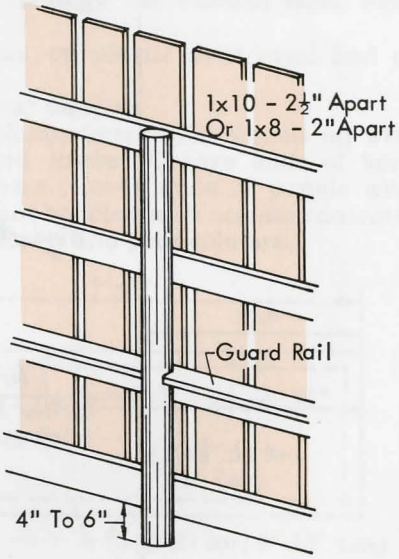


**Boards**

Better For Snow Protection

**Solid**

**80% Solid**

# PLANK FENCE SPLICES

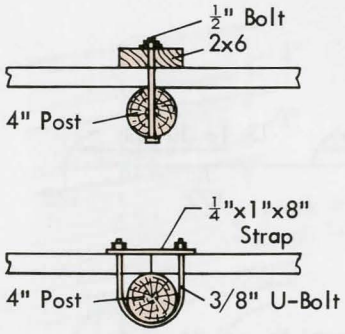


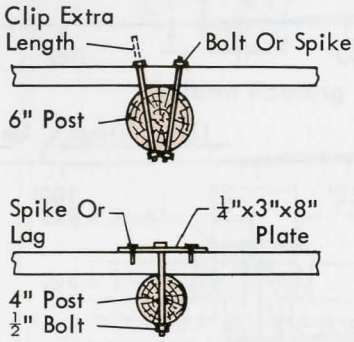


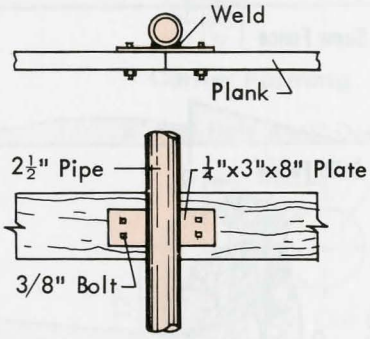


**Wood Post Splice**

Round or Square Posts

**Pipe Post Splice**

# GATES

When Gate Span is Over 14', Use 1 x 6 for all Rails. For 18' and 20' Spans, Place Double Rails Top and Bottom

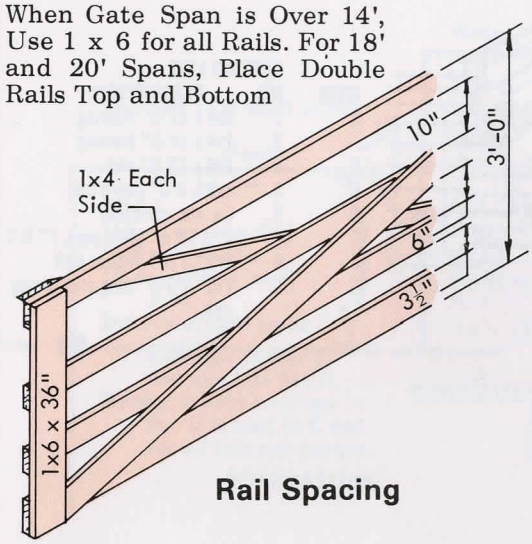


**Rail Spacing**

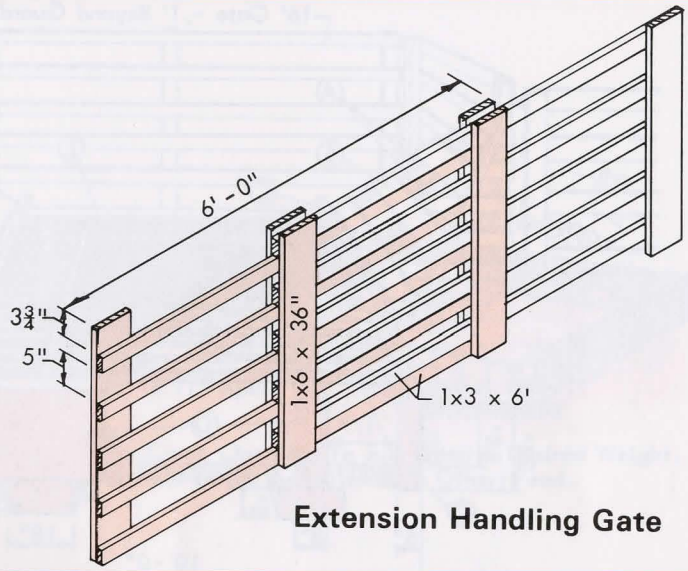


**Extension Handling Gate**

# HINGES

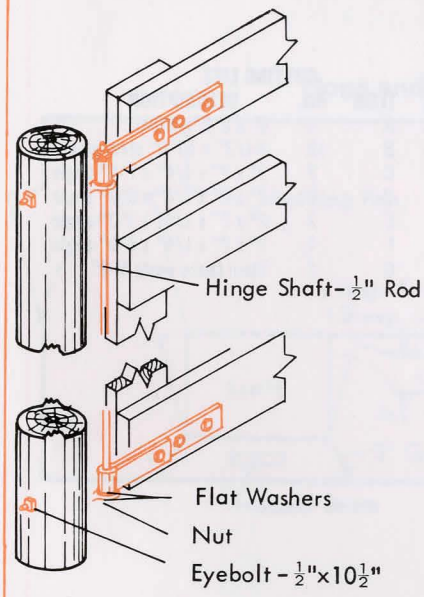


**Lot and Field Hinge**

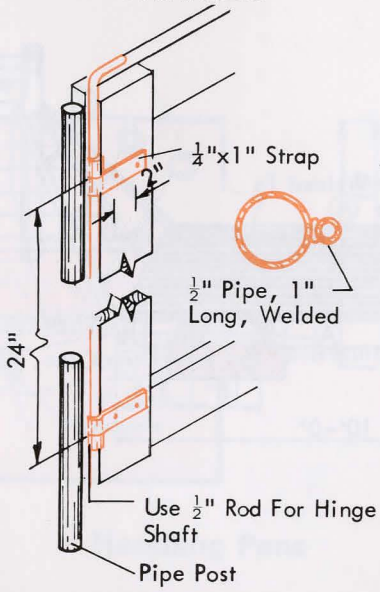


**Pen Hinge**

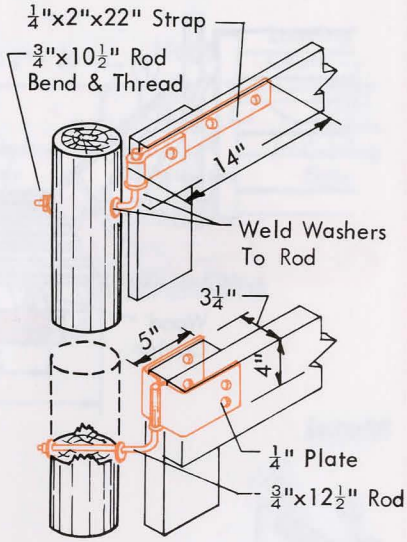


# LATCHES

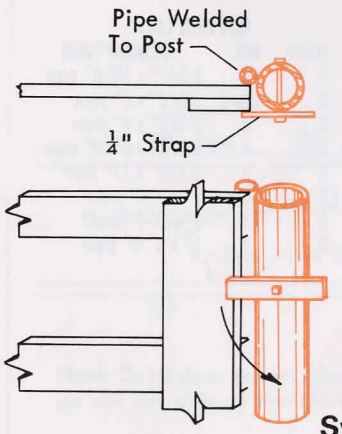


**Swivel Latch**

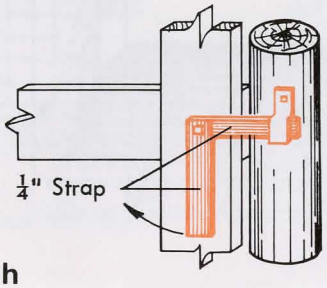


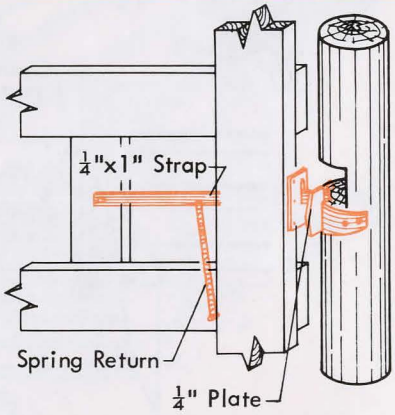


**Strap Iron Latch**
**(Locks Automatically)**

# STOCK GUARDS

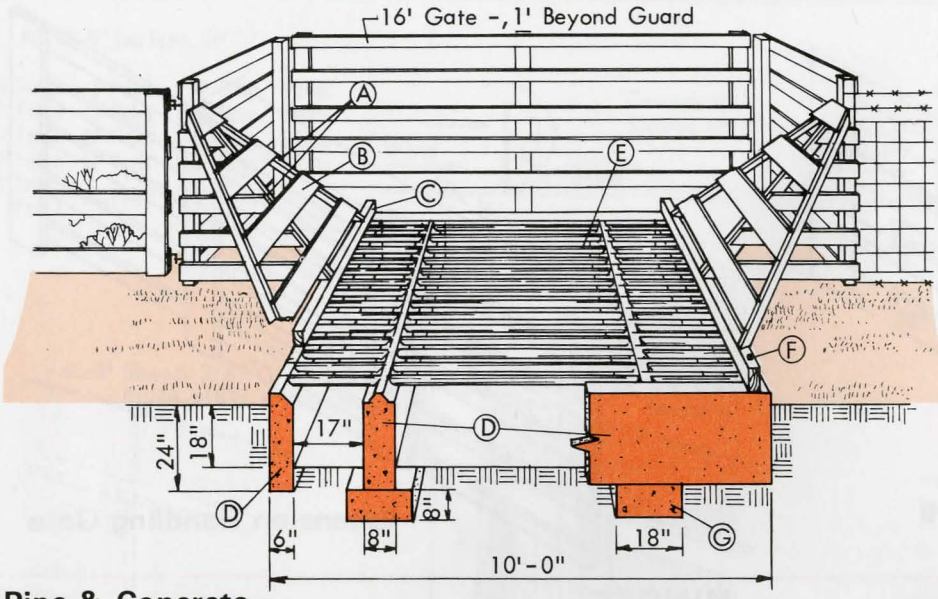


**CUTTING LIST**

| ITEM | NO. | DESCRIPTION |
|---|---|---|
| A | 1 | 2x4 x 12'-0" framing |
| | 2 | 2x4 x 14'-0" framing |
| B | 6 | 1x6 x 12'-0" slat |
| C | 2 | 4x6 x 9'-0" guard rail |
| D | 3 | Cu. yds. concrete |
| E | 14 | 2" x 10'-0" steel pipe, 7" O.C. |
| F | 6 | 1/2" x 16" anchor bolt |
| G | 4 | 1/2" x 9'-0" long reinforcing rod |

## Pipe & Concrete

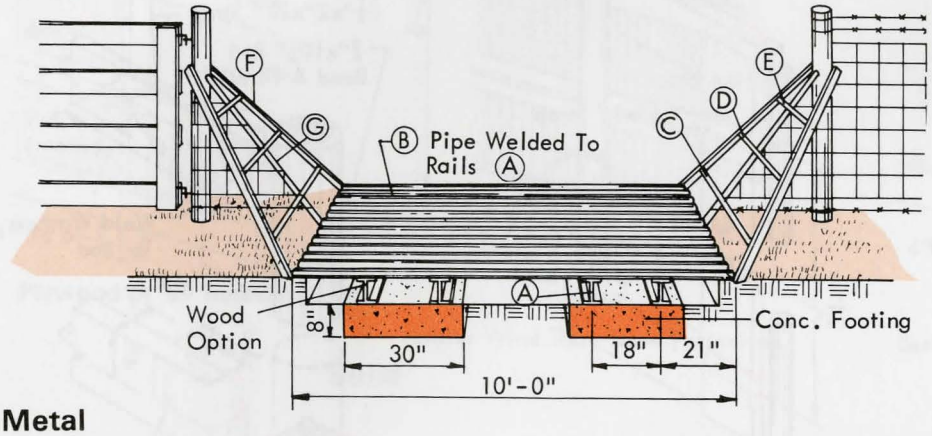


**CUTTING LIST**

| ITEM | NO. | DESCRIPTION |
|---|---|---|
| A | 4 | 6" x 8'-0" I-beam |
| B | 12 | 2-1/2" x 10'-0" steel pipe |
| C | 2 | 2" x 2" x 1/4" x 7'-0" angle |
| D | 2 | 2" x 2" x 1/4" x 5'-0" angle |
| E | 2 | 2" x 2" x 1/4" x 3'-0" angle |
| F | 4 | 2" x 2" x 1/4" x 6'-0" angle |
| G | 2 | Steel fence posts 5'-0" |

## Metal

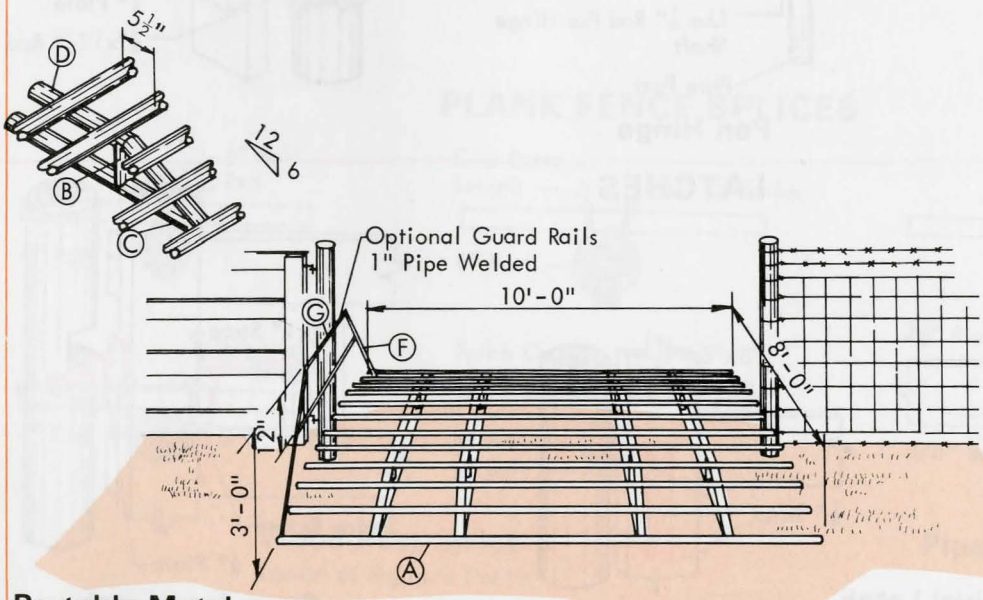


**CUTTING LIST**

| ITEM | NO. | DESCRIPTION |
|---|---|---|
| A | 12 | 2-1/2" x 10'-0" pipe |
| B | 16 | 2-1/2" x 7" pipe |
| C | 4 | 2-1/2" x 8" pipe |
| D | 4 | 2-1/2" x 6'-10" pipe |
| E | 4 | 2-1/2" x 17" pipe |
| F | 2 | 1" x 4'-0" pipe |
| G | 1 | 1" x 2'-7" pipe |
| H | 1 | 1" x 4'-8" pipe |

## Portable Metal

# HANDLING EQUIPMENT

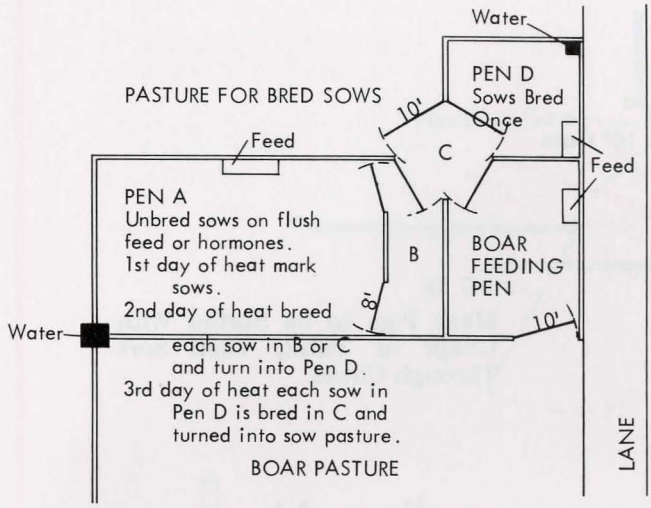


**Layout for Individual Sow Breeding**

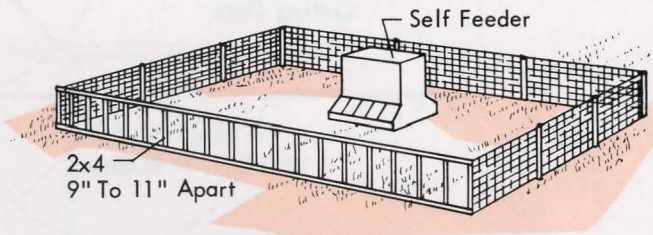


Size Creep Openings To Suit Breed & Desired Weight: Separate Larger Animals While Others Feed.

**Hog Sorting Creep**

**Hogs and Cattle**

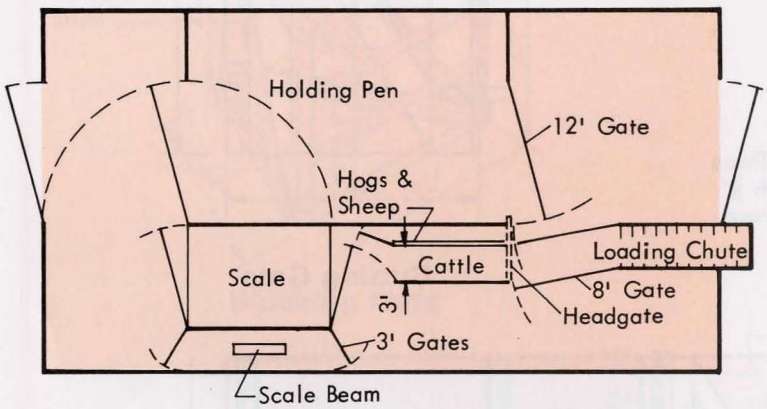


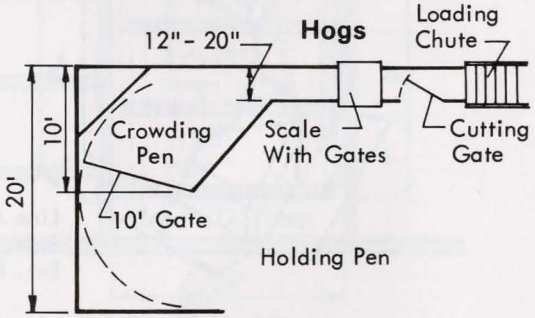


**Handling Pens**

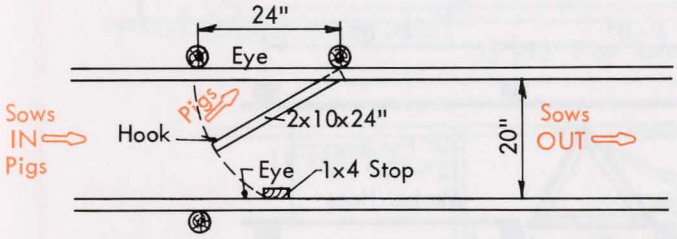


Hook 2x10 door across chute. Sows step over but pigs go out the side of the chute.

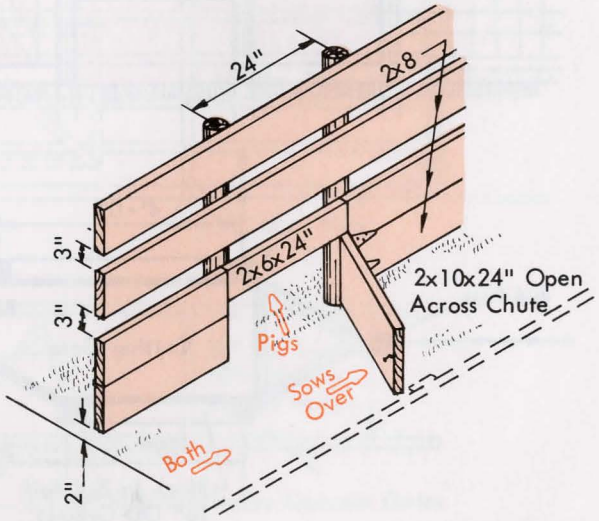


**Pig and Sow Sorter**

# SORTING CHUTES

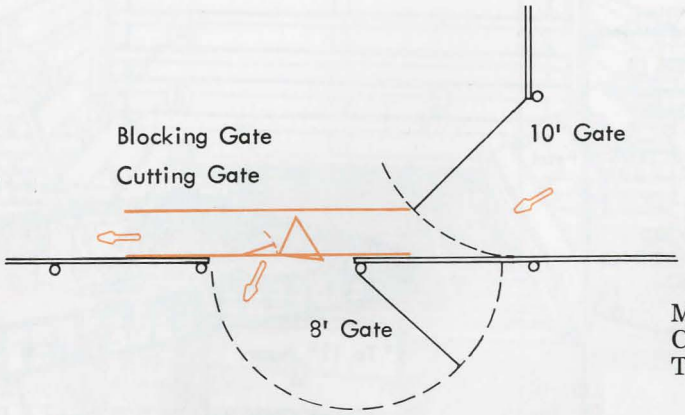


Mark Pigs to be Sorted With Chalk or Paint, Then Sort Through Chute.

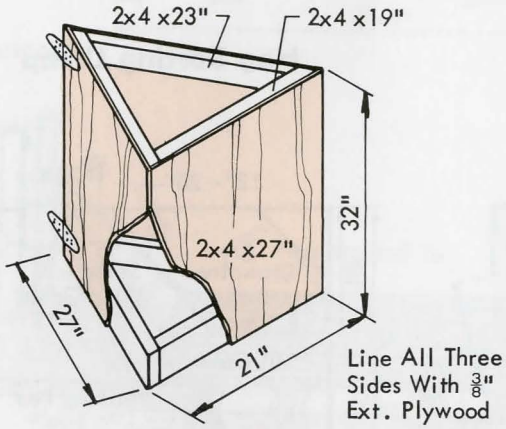


**Blocking Gate**

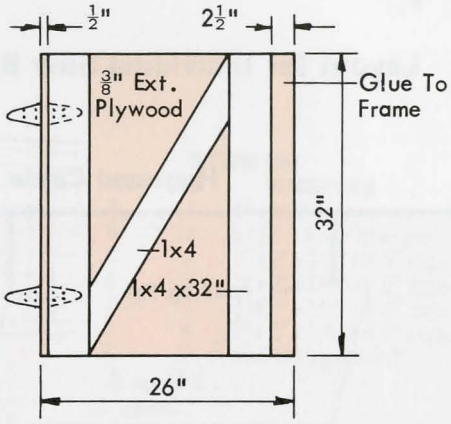


**Cutting Gate**

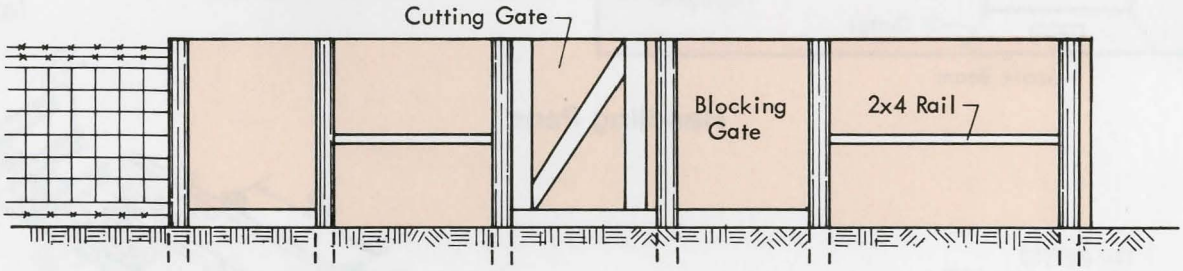


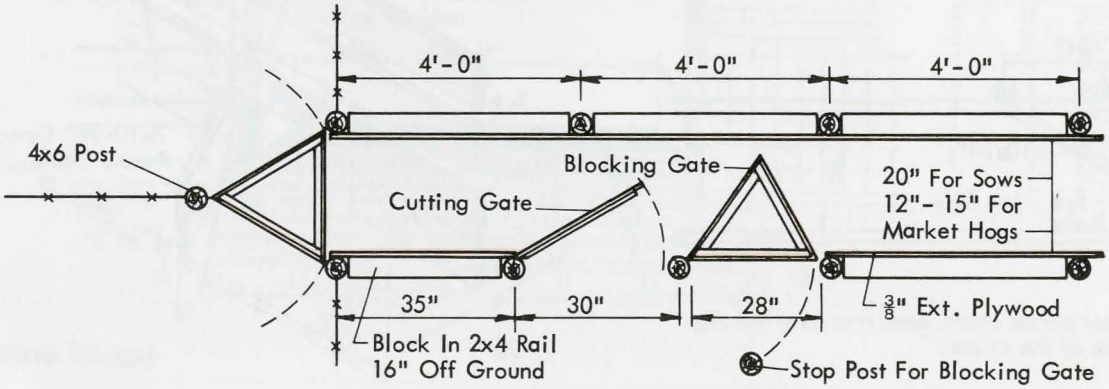


**Stationary (wood)**

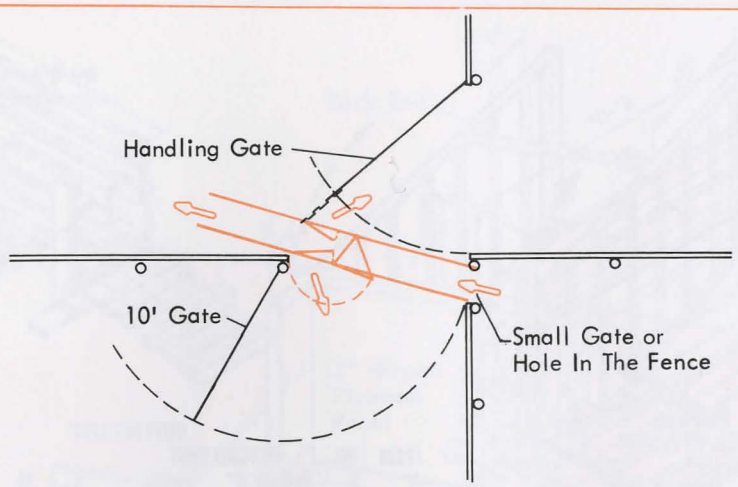


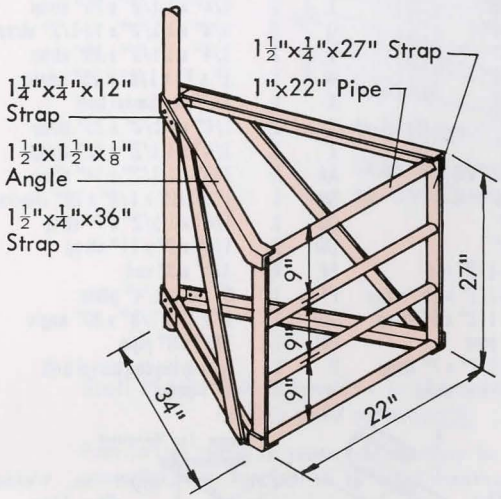


**Blocking Gate**

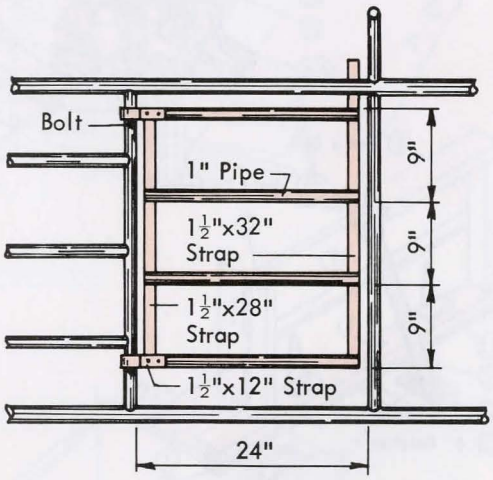


**Cutting Gate**

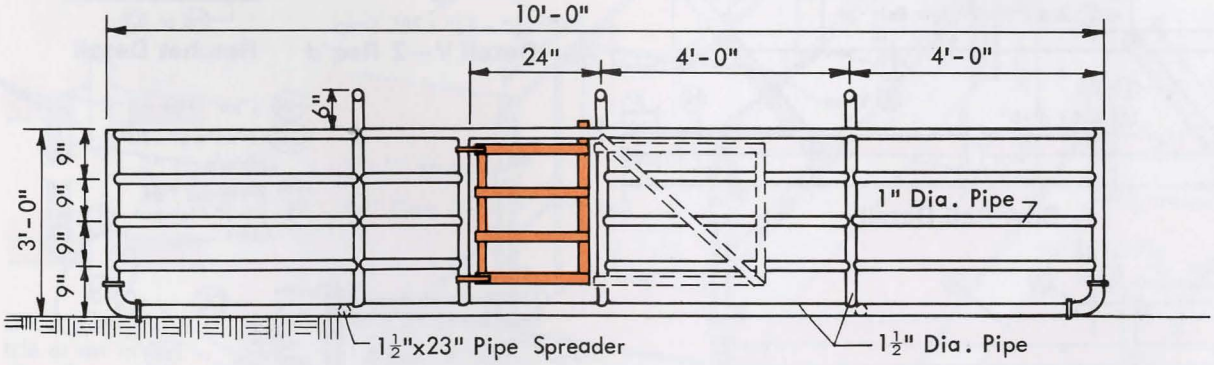


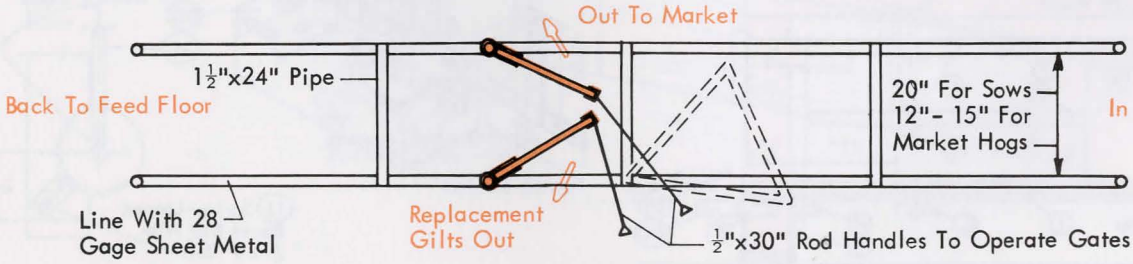


**Portable (pipe)**

# BREEDING RACK

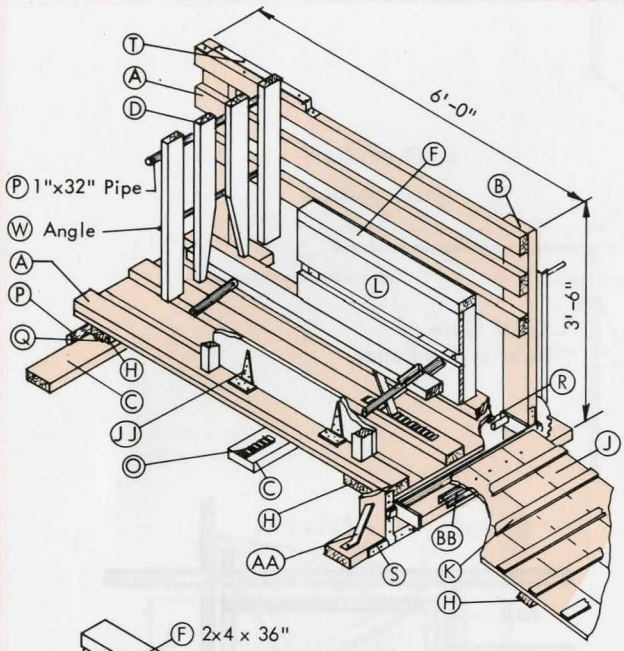


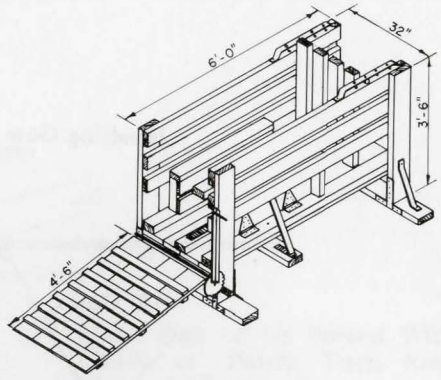


**CUTTING LIST**

| ITEM | NO. | DESCRIPTION | ITEM | NO. | DESCRIPTION |
|---|---|---|---|---|---|
| A | 9 | 2x4 x 6'-0" | S | 16 | 1/4" x 1-1/2" x 10" strap |
| B | 4 | 2x6 x 3'-6" | T | 2 | 1/4" x 1-1/2" x 28" strap |
| C | 3 | 2x6 x 4'-0" | U | 2 | 1/4" x 1-1/2" x 13-1/2" strap |
| D | 4 | 2x4 x 30" | V | 2 | 1/4" x 1-1/2" x 28" strap |
| E | 1 | 2x4 x 5'-0" | W | 1 | 1" x 1" x 1/8" x 25" angle |
| F | 2 | 2x4 x 36" | X | 2 | 1/2" dia. barrel bolt |
| G | 4 | 2x3 x 17" | Y | 2 | 1/4" x 1-1/2" x 23" strap |
| H | 5 | 2x4 x 28" | Z | 1 | 1/4" x 1-1/2" x 12" strap |
| I | 4 | 1x8 x 6'-0" T & G | AA | 3 | 1/4" x 1-1/2" x 14" strap |
| J | 4 | 1x8 x 4'-6" T & G | BB | 1 | 1" x 1/2" x 1/8" x 28" channel |
| K | 7 | 1x2 x 28" | CC | 2 | 1/4" x 1-1/2" x 7" strap |
| L | 4 | 1x8 x 36" | DD | 2 | 1/4" x 2" x 11" strap |
| M | 27 | 3/8" x 1-1/2" rod | EE | 4 | 3/4" x 3" rod |
| N | 1 | 3/8" x 1-1/2" x 15" strap | FF | 1 | 8" dia. x 1/4" plate |
| O | 2 | 3/8" x 1-1/2" x 6" strap | GG | 1 | 1" x 1" x 1/8" x 30" angle |
| P | 3 | 1" x 32" pipe | HH | 1 | 1/2" x 6" pipe |
| Q | 2 | 1/4" x 1-1/2" x 7" strap | II | 1 | Spring-loaded barrel bolt |
| R | 2 | 1/8" x 1" x 6" strap | JJ | 7 | 6" T-hinge |

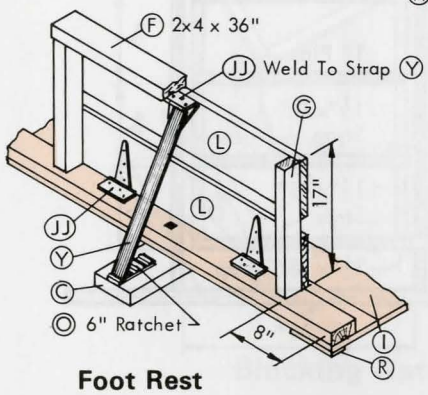


**Foot Rest**

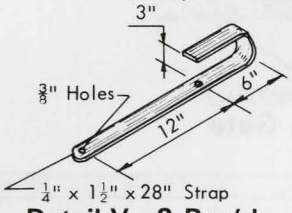


**Detail V—2 Req'd**

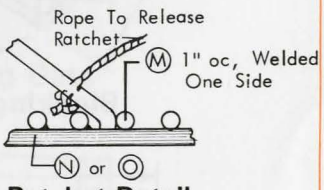


**Ratchet Detail**

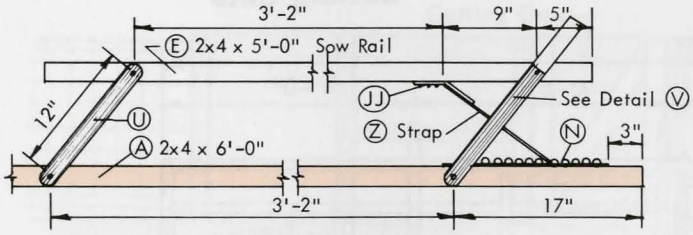


**Sow Rail Detail**

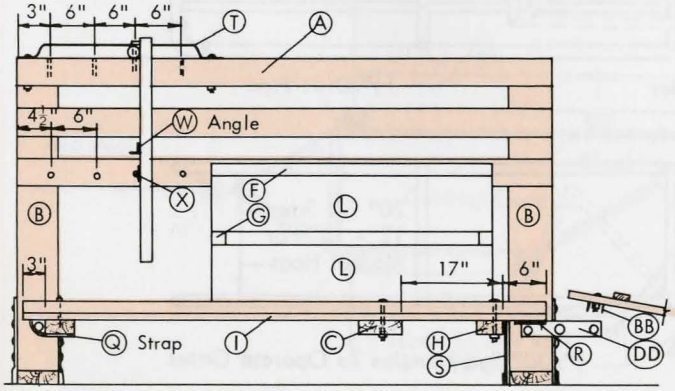


**Section**

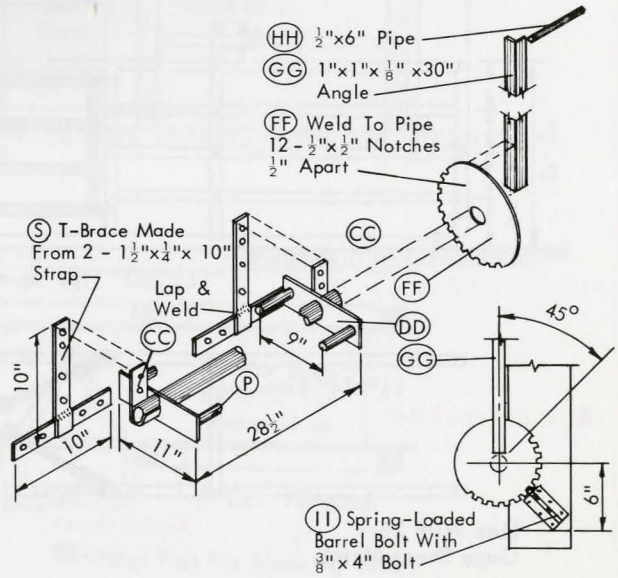


**Adjusting Shaft Detail**

# FARROWING STALLS

Hinged panel is swung up and forward to release sow.

Sows to 400#, 22" x 7'
over 400#, 24" x 7'

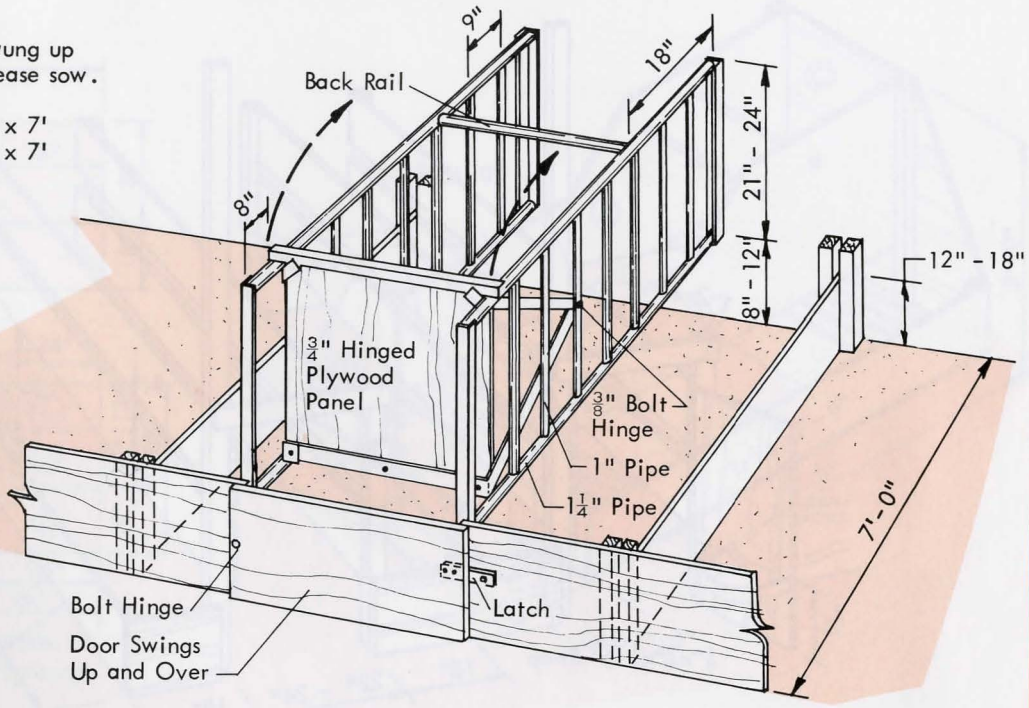


Stall Plank: Full dimension 1x12 hardwood or S4S 2x12 softwood.

Farrowing stalls in open houses may be covered with tarpaulins in cold weather.

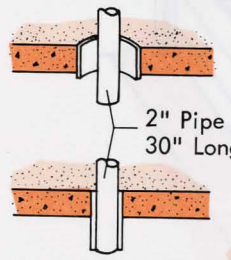


Grout posts in 4" tile or set in 2½" pipe sleeve in floor.

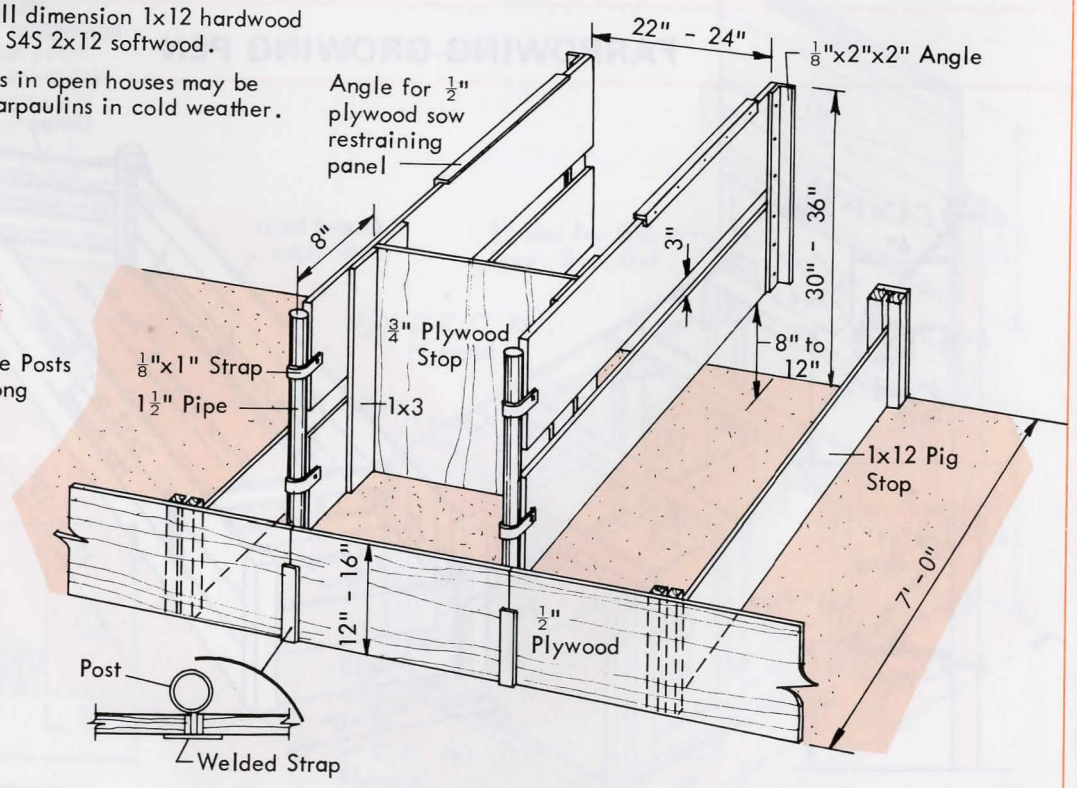

## FARROWING STALL

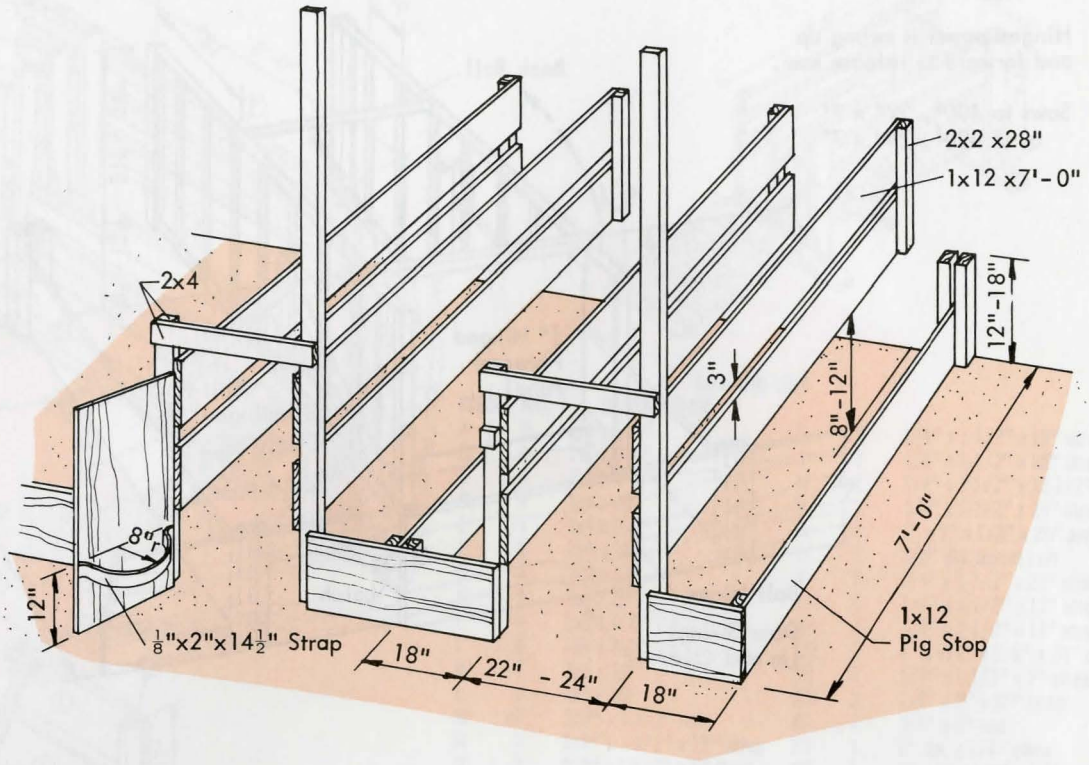


## FARROWING-GROWING PEN

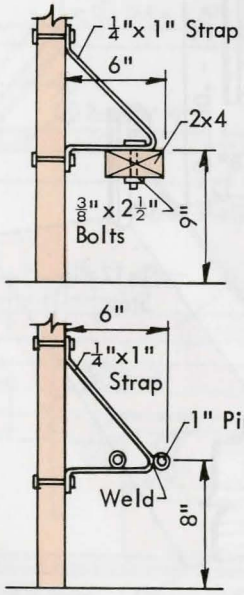


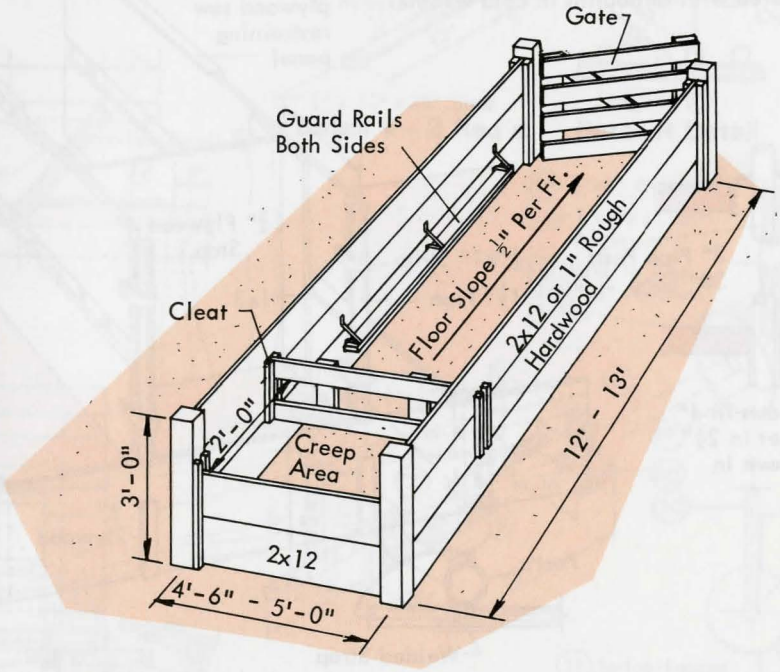


Place Brackets About 4'-0" o.c.

## FARROWING CRATE

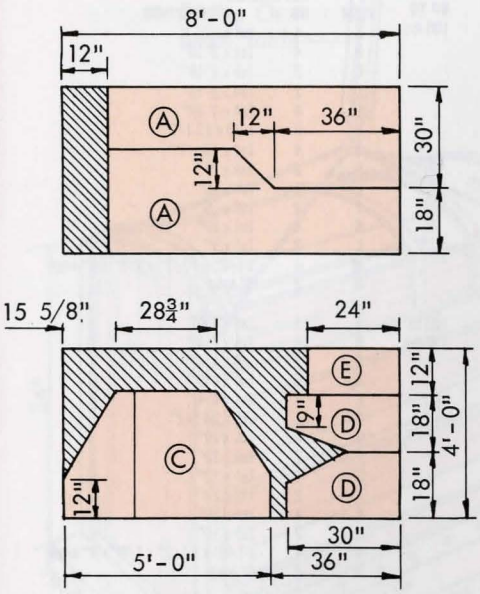


**Cutting Diagrams**
3/4" C-C Ext Plywood

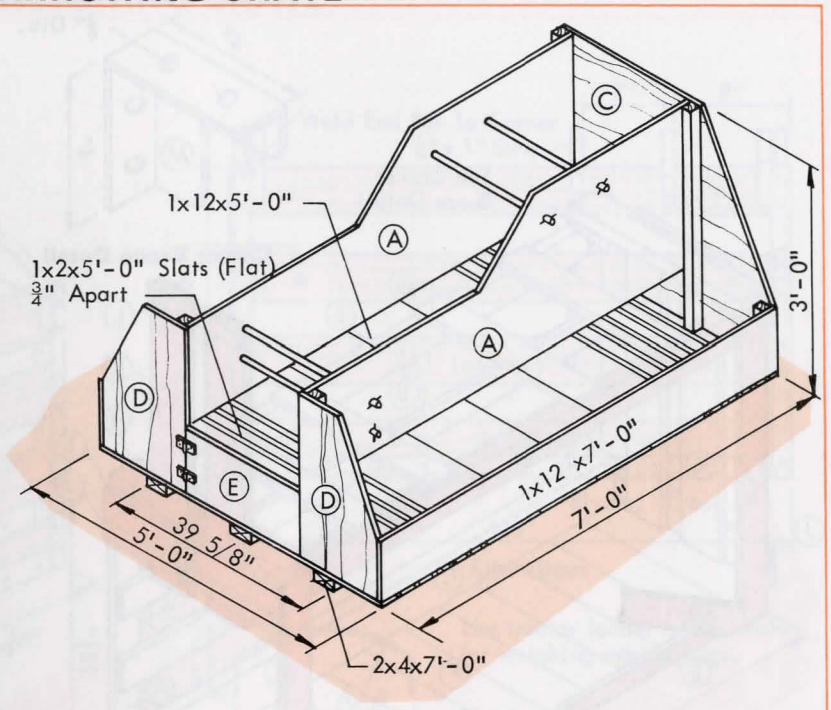


## SOW & LITTER CRATE

**CUTTING LIST**

| ITEM | NO. | DESCRIPTION |
|---|---|---|
| A | 4 | 2"x4" x 4'-0" |
| B | 8 | 2"x4" x 32-3/4" |
| C | 1 | 2"x12" x 5'-7" |
| D | 2 | 2"x4" x 5'-7" |
| E | 4 | 3"x4" x 4'-0" |
| F | 4 | 2"x2" x 3'-0" |
| G | 4 | 1/4" x 3/4" x 12" strap |

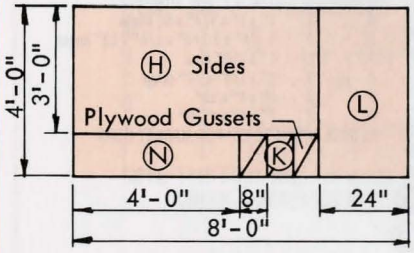


**Cutting Diagram**
2 Sheets, 3/8" x 4' x 8'
C-C Ext Plywood

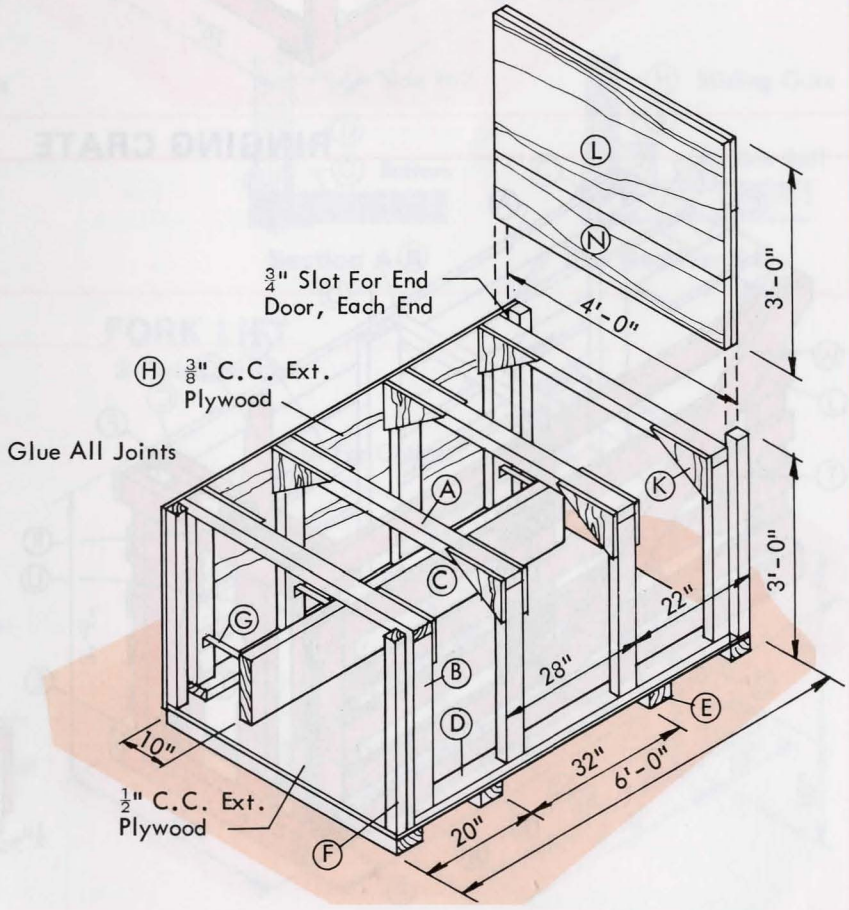

# SHIPPING CRATE

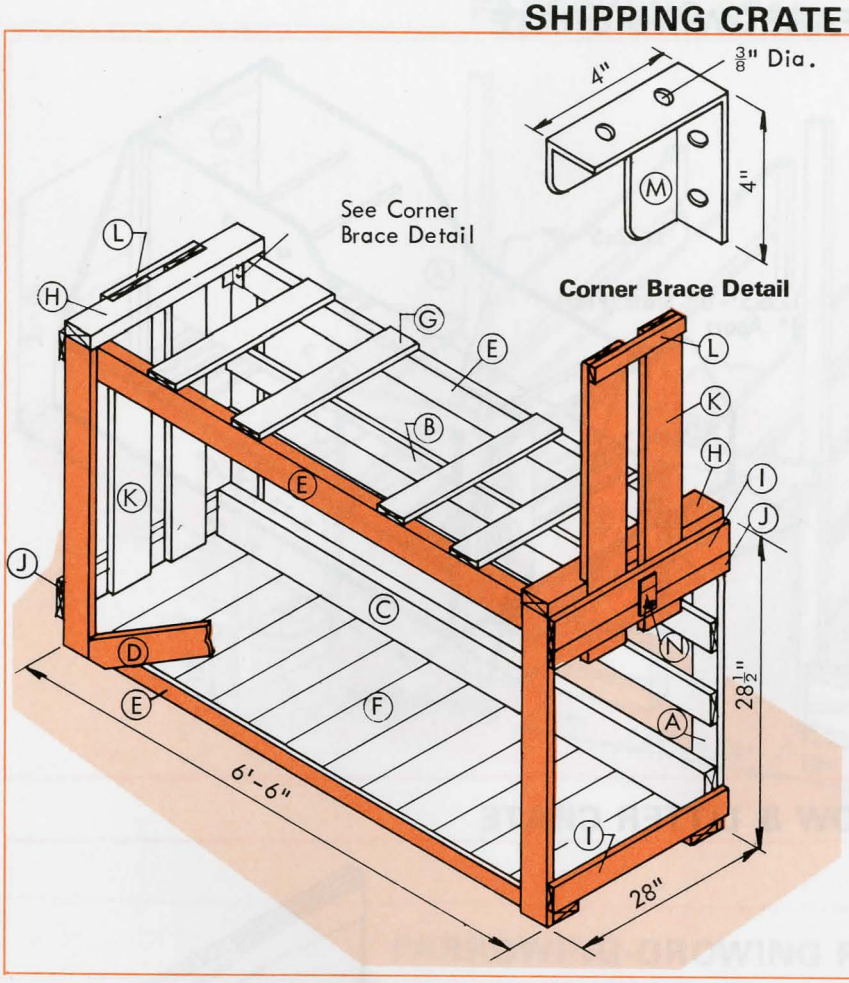


| ANIMAL WEIGHT UP TO | ITEM | CUTTING LIST NO. | DESCRIPTION |
|---|---|---|---|
| 100 lbs. | A | 4 | 1x4 x 27″ |
| | B | 4 | 1x4 x 3′-10″ |
| | C | 2 | 1x6 x 3′-10″ |
| | D | 2 | 1x4 x 3′-11″ |
| | E | 4 | 2x4 x 3′-10″ |
| | F | 5 | 1x10 x 13-1/2″ |
| | G | 4 | 1x4 x 13-1/2″ |
| | H | 2 | 2x4 x 15″ |
| | I | 4 | 1x4 x 15″ |
| | J | 2 | 1x2 x 15″ |
| | K | 4 | 1x4 x 26″ |
| | L | 2 | 1x2 x 9″ |
| | M | 4 | 1-1/2″ x 1-1/2″ x 1/8″ x 8″ angle |
| | N | 2 | 3″ hasp |
| 100 to 225 lbs | A | 4 | 1x4 x 3′-0″ |
| | B | 4 | 1x4 x 4′-4″ |
| | C | 2 | 1x6 x 4′-4″ |
| | D | 2 | 1x4 x 4′-9″ |
| | E | 4 | 2x4 x 4′-4″ |
| | F | 7 | 1x8 x 20-1/2″ |
| | G | 6 | 1x4 x 20″ |
| | H | 2 | 2x4 x 22″ |
| | I | 4 | 1x4 x 22″ |
| | J | 2 | 1x2 x 22″ |
| | K | 4 | 1x6 x 35″ |
| | L | 2 | 1x2 x 16″ |
| | M | 4 | 1-1/2″ x 1-1/2″ x 1/8″ x 8″ angle |
| | N | 2 | 3″ hasp |
| 225 to 500 lbs | A | 4 | 1x4 x 3′-7″ |
| | B | 4 | 1x4 x 6′-6″ |
| | C | 2 | 2x6 x 6′-6″ |
| | D | 2 | 1x4 x 7′-6″ |
| | E | 4 | 2x4 x 6′-6″ |
| | F | 14 | 1x6 x 26-1/2″ |
| | G | 8 | 1x4 x 27″ |
| | H | 2 | 2x4 x 28″ |
| | I | 4 | 1x4 x 28″ |
| | J | 2 | 1x2 x 28″ |
| | K | 6 | 1x6 x 3′-6″ |
| | L | 2 | 1x2 x 22″ |
| | M | 4 | 1-1/2″ x 1-1/2″ x 1/8″ x 8″ angle |
| | N | 2 | 3″ hasp |

# RINGING CRATE

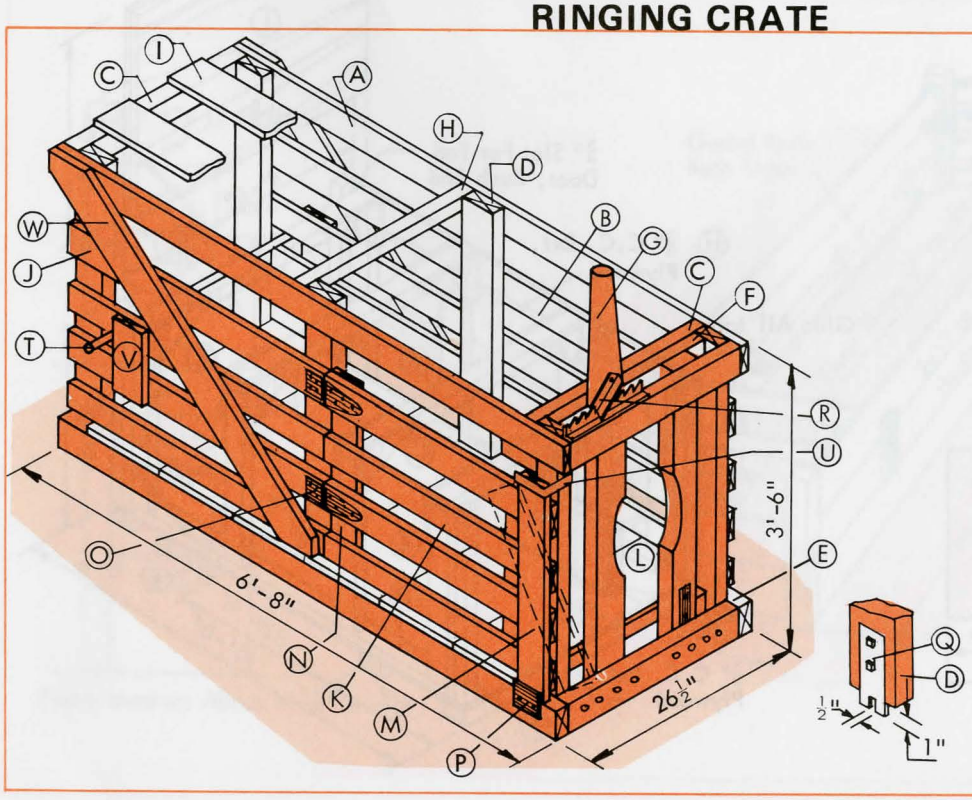


| ITEM | CUTTING LIST NO. | DESCRIPTION |
|---|---|---|
| A | 2 | 1x4 x 6′-8″ |
| B | 4 | 1x4 x 6′-5″ |
| C | 5 | 2x4 x 23-1/4″ (18-3/4″) |
| D | 7 | 2x4 x 3′-6″ |
| E | 2 | 2x4 x 6′-8″ |
| F | 2 | 2x4 x 20″ (15-1/2″) |
| G | 1 | 2x4 x 5′-0″ |
| H | 1 | 2x2 x 23-1/4″ (18-3/4″) |
| I | 2 | 1x6 x 6′-3″ |
| J | 4 | 1x4 x 3′-5″ |
| K | 4 | 1x4 x 3′-0″ |
| L | 6 | 1x12 x 26-1/2″ (22″) |
| M | 1 | 1x4 x 31″ |
| N | 2 | 1x4 x 27″ |
| O | 2 | 4″ T-hinges |
| P | 1 | 3″ x 5″ x 1/4″ plate |
| Q | 1 | 1/4″ x 2″ x 6″ strap |
| R | 1 | 1″ x 1″ x 1/4″ x 6″ angle |
| S | 1 | 1-1/4″ x 1-1/4″ x 1/4″ x 12″ angle |
| T | 1 | 1″ x 3′-0″ pipe |
| U | 1 | 1″ x 1/4″ x 12″ strap |
| V | 2 | 1″ x 4″ x 12″ |
| W | 2 | 1″ x 4″ x 4′-10″ |

REDUCE WIDTH TO 22″ FOR MARKET HOGS

# WEIGHING CRATE

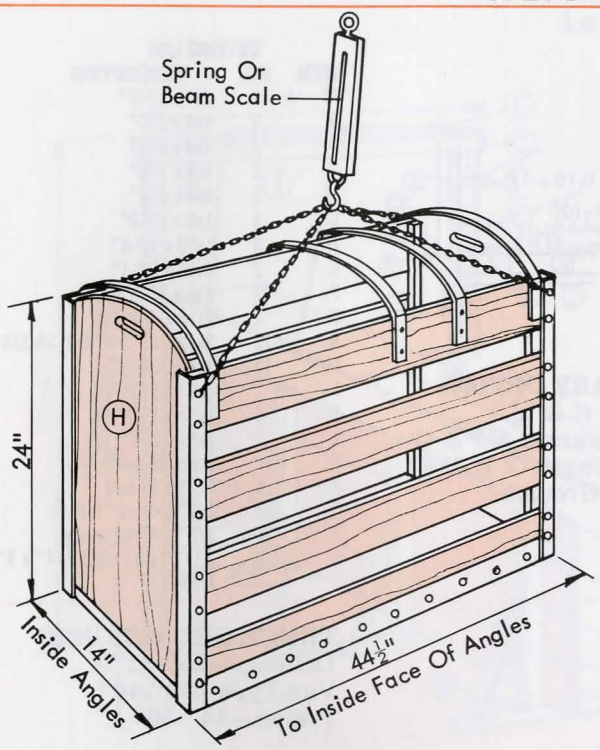


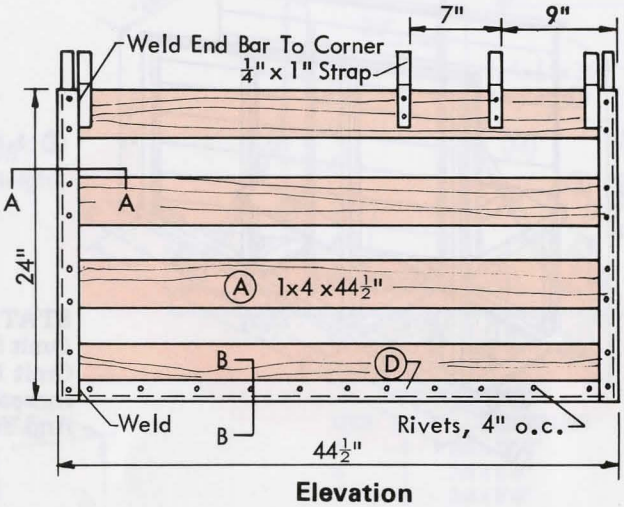


**Elevation**

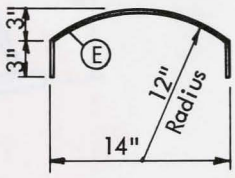


Use tractor loader to lift crate for weighing market hogs.

Flat head bolts may be used instead of rivets.

**Bar Detail**

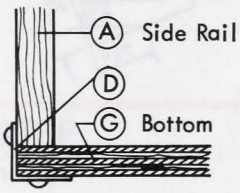


**Section A-A**

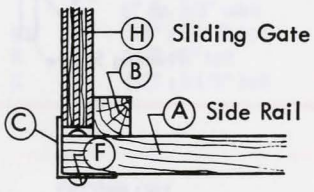


**Section B-B**

**CUTTING LIST**

| ITEM | NO. | DESCRIPTION |
|---|---|---|
| A | 8 | 1x4 x 44-1/2" |
| B | 4 | 1x1 x 23" |
| C | 4 | 1-1/2" x 1-1/2" x 1/8" x 24" angle |
| D | 2 | 1-1/2" x 1-1/2" x 1/8" x 41-3/4" angle |
| E | 4 | 1/4" x 1" x 22" strap |
| F | 62 | 3/16" x 1-1/4" rivets |
| | | or |
| | 62 | 3/16" flat head bolts |
| G | 1 | 3/4" x 14" x 44-1/2" plywood bottom |
| H | 2 | 3/4" x 12-1/2" x 26" gate |

# FORK LIFT

## 3-Point Hitch

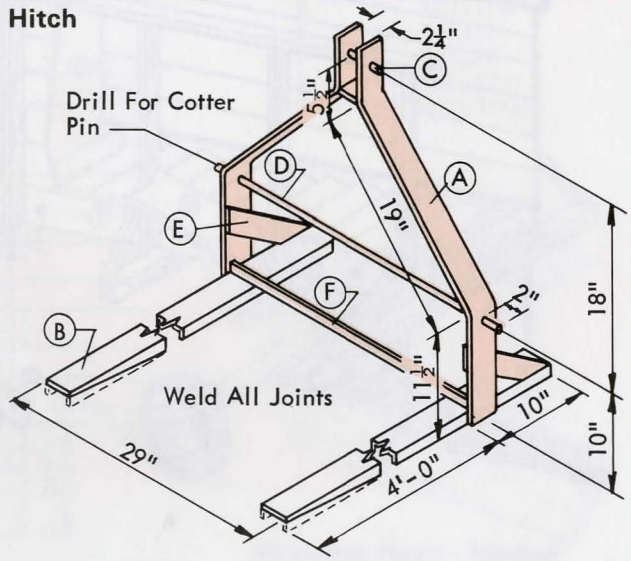


**CUTTING LIST**

| ITEM | NO. | DESCRIPTION |
|---|---|---|
| A | 1 | 3" x 1/2" x 3'-0" strap |
| B | 2 | 3" x 1-1/2" x 4'-10", 5# channel |
| C | 1 | 7/8" x 4" pin |
| D | 1 | 7/8" x 34" |
| E | 2 | 2" x 1/4" x 13" strap |
| F | 1 | 1-1/2" x 1-1/2" x 1/4" x 29" angle |

NOTE: THIS FORK WILL FIT MOST HITCHES, CHECK DIMENSIONS BEFORE FABRICATION.

# LOADING CHUTES

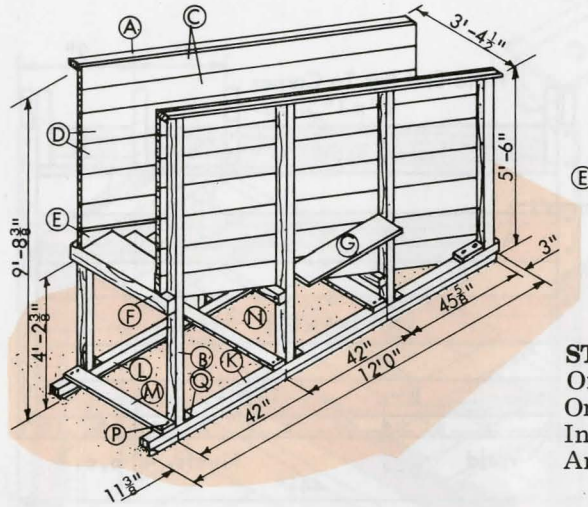


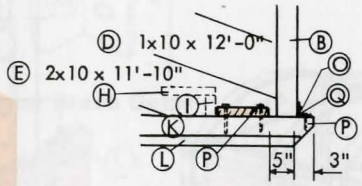


**STATIONARY OPTION**
Omit Skids K & L
Omit Hardware O & P & Q
Increase Length Of B 3'-6"
And Set In Ground

**CUTTING LIST**

| ITEM | NO. | DESCRIPTION |
|---|---|---|
| A | 2 | 2x4 x 12'-0" |
| B | 2 | 4x4 x 5'-0" |
| | 2 | 4x4 x 6'-3" |
| | 2 | 4x4 x 7'-6" |
| | 2 | 4x4 x 8'-8" |
| C | 4 | 1x6 x 12'-2" |
| D | 8 | 1x10 x 12'-4" |
| E | 2 | 2x10 x 12'-1" |
| F | 3 | 4x4 x 28-3/4" |
| G | 2 | 2x12 x 3'-2-3/8" |
| H | 12 | 2x10 x 18-1/4" & 1 28-3/4" |
| I | 12 | 2x4 x 18-1/4" |
| J | 2 | 1x8 x 11'-0" |
| K | 2 | 4x4 x 12'-0" |
| L | 2 | 2x4 x 12'-0" |
| M | 3 | 2x6 x 28-3/4" |
| N | 6 | 1/2" x 9" bolt |
| O | 16 | 1/2" x 4-1/2" bolt |
| P | 16 | 3/8" x 4" lag screw |
| Q | 8 | 2-1/2" x 2-1/2" x 1/4" x 3" angle |

TRUCK BED HEIGHTS
Delivery—25"-31"
Van-Type—38"-44"
Trailer—44"-50"

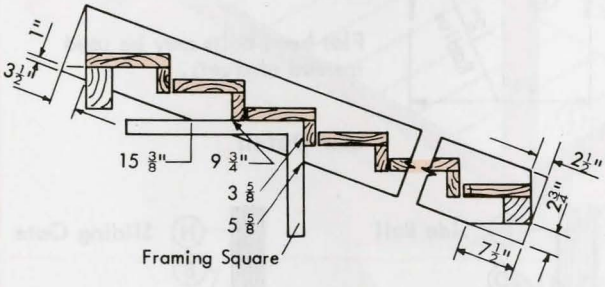


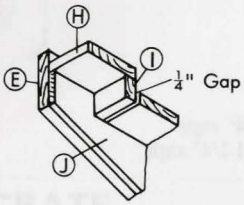


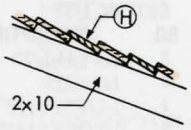


ALTERNATE SHINGLE STEP

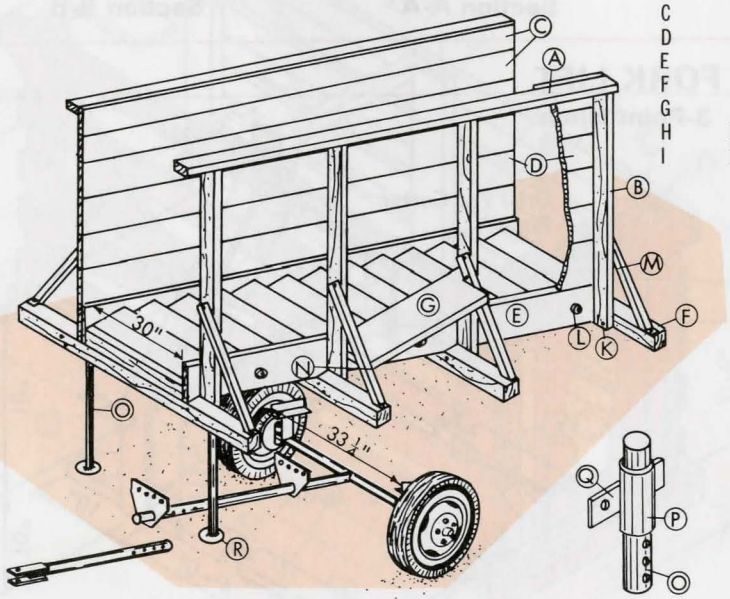





**CUTTING LIST**

| ITEM | NO. | DESCRIPTION | | | |
|---|---|---|---|---|---|
| A | 2 | 2x4 x 11'-8" | J | 2 | 1x8 x 11'-0" |
| B | 8 | 2x4 x 5'-6" | K | 16 | 3/8" x 6" bolt |
| C | 4 | 1x8 x 11'-8" | L | 3 | 3/8" x 25" tie rod |
| D | 8 | 1x10 x 11'-8" | M | 8 | 2" x 2" x 3/16" x 3'-1" angle |
| E | 2 | 2x10 x 11'-8" | N | 4 | 1/2" x 1/2" x 3/16" x 11" angle |
| F | 4 | 4x4 x 5'-2" | O | 2 | 1-1/2" dia. x 5'-10" pipe |
| G | 2 | 2x12 x 3'-4" | P | 4 | 2" dia. x 4" pipe |
| H | 13 | 2x10 x 20" | Q | 4 | 1/4" x 2" x 4" steel plate |
| I | 13 | 2x4 x 20" | R | 2 | 1/4" x 6" dia. steel plate |

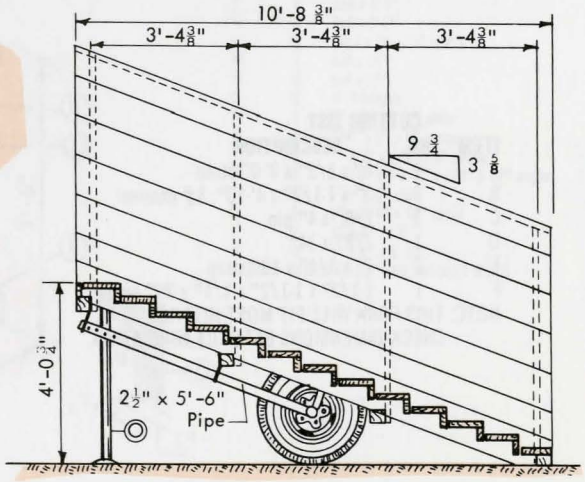

# VARIABLE HEIGHT

## Loading Chute

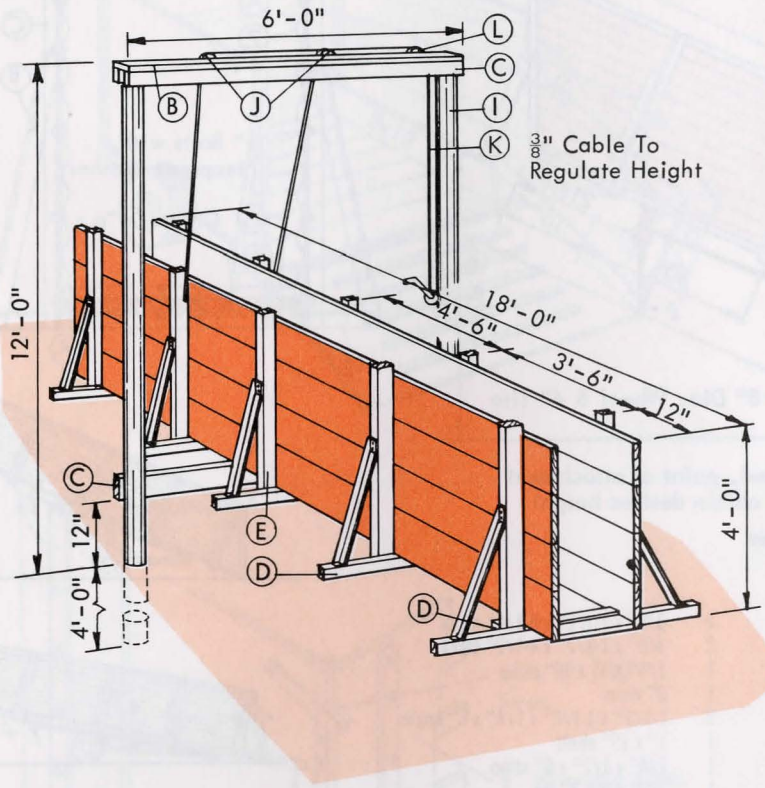


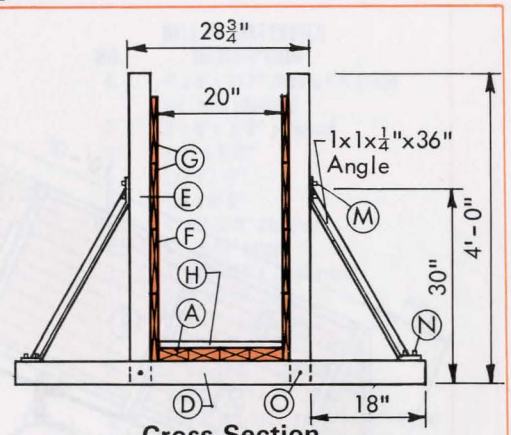


Cross Section

**CUTTING LIST**

| ITEM | NO. | DESCRIPTION |
|---|---|---|
| A | 4 | 2x6 x 18'-0" |
| B | 1 | 2x8 x 6'-0" |
| C | 3 | 2x8 x 6'-0" |
| D | 5 | 2x4 x 31-1/2" |
| | 5 | 2x4 x 5'-4" |
| E | 10 | 2x4 x 4'-0" |
| F | 4 | 1x12 x 18'-0" |
| G | 4 | 1x10 x 18'-0" |
| H | 19 | 1x2 x 22" |
| I | 2 | 4" top x 16'-0" pole (Treated) |
| J | 2 | pulley 6" dia. for 3/8" cable |
| K | 17'-0" | 3/8" cable |
| L | 1 | double pulley 6" dia. 3/8" cable |
| M | 12 | 3/8" x 5-1/2" bolt |
| N | 10 | 1/2" x 5" bolt |
| O | 10 | 1/2" x 5-1/2" bolt |

# SHINGLE STEP

## Loading Chute

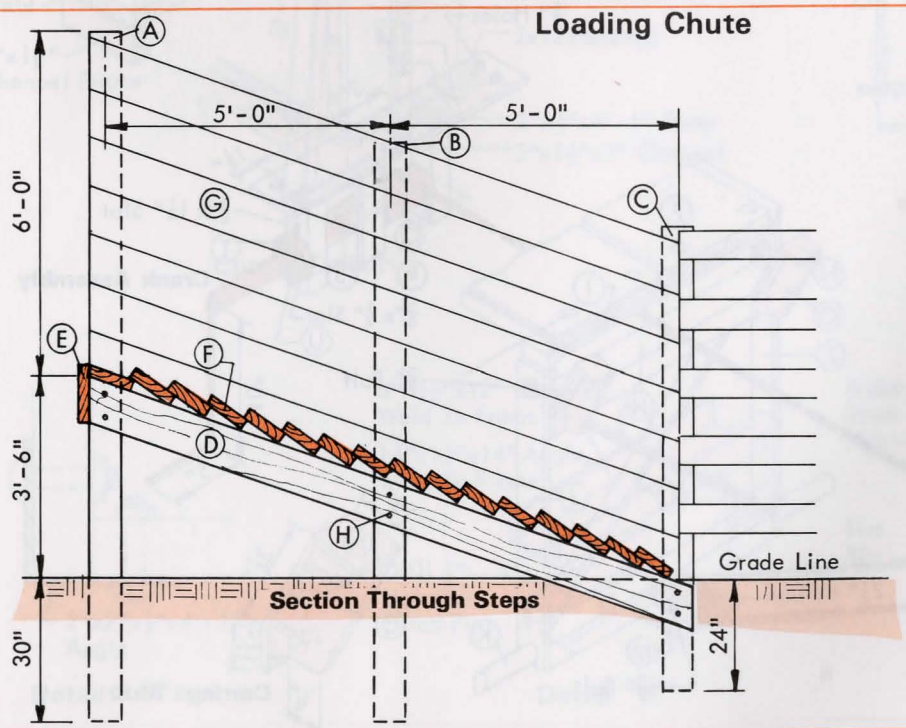


**CUTTING LIST**

| ITEM | NO. | DESCRIPTION |
|---|---|---|
| A | 2 | 6" top x 12'-0" posts |
| B | 2 | 6" top x 10'-0" posts |
| C | 2 | 6" top x 8'-0" posts |
| D | 2 | 2x10 x 11'-4" |
| E | 1 | 2x12 x 32" |
| F | 16 | 2x10 x 20" |
| G | 14 | 1x10 x 11'-0" |
| H | 12 | 1/2" x 9" bolt |

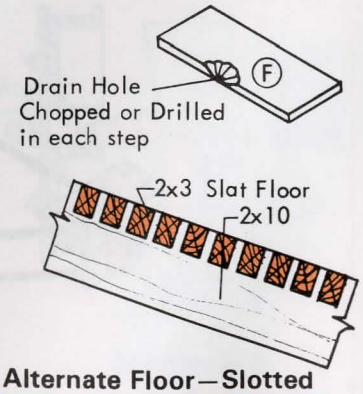


Alternate Floor—Slotted

# PORTABLE LOADING CHUTE

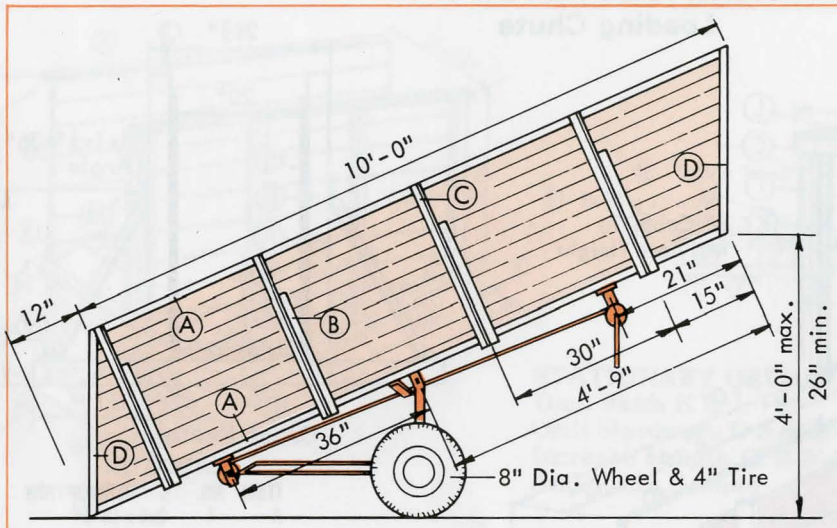


If other tire or wheel size is used, point of attachment of carriage may be changed to obtain desired height.

**Side View**

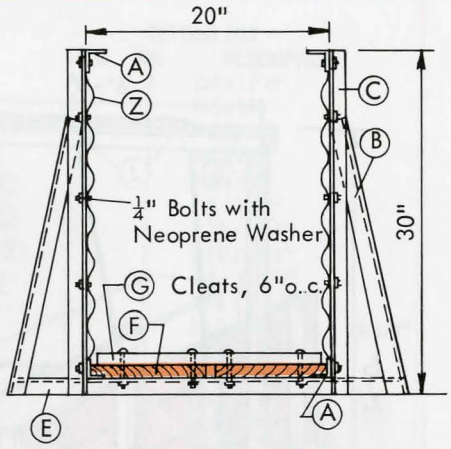


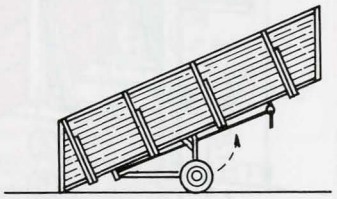

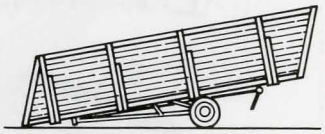

**CUTTING LIST**

| ITEM | NO. | DESCRIPTION |
|---|---|---|
| A | 4 | 1" x 1" x 3/16" x 10'-0" angle |
| B | 8 | 1" x 1" x 3/16" x 24" angle |
| C | 8 | 1" x 1" x 3/16" x 30" angle |
| D | 4 | 1" x 1" x 3/16" x 31" angle |
| E | 4 | 1" x 1" x 3/16" x 32" angle |
| F | 2 | 1x10 x 10'-0" |
| G | 18 | 1" x 1" x 19" cleats |
| H | 2 | 1-1/2" x 1-1/2" x 1/4" x 20" angle |
| I | 1 | 3/8" x 1-1/2" x 24" strap |
| J | 2 | 3/8" x 1-1/2" x 17-1/2" strap |
| K | 1 | 1" x 28" axle |
| L | 2 | 1/4" x 1-1/4" x 25-3/4" strap |
| M | 2 | 1-1/2" x 1-1/2" x 1/4" x 3" angle |
| N | 2 | 3/8" x 1-1/2" x 6-1/4" strap |
| O | 2 | 3/8" x 1-1/2" x 4-1/2" strap |
| P | 1 | 1/4" x 3" x 16" strap |
| Q | 1 | 2" drum |
| R | 3 | 1-1/2" x 1-1/2" x 1/4" x 6" angle |
| S | 1 | 1" x 15" shaft |
| T | 1 | 1/4" x 1/2" x 6" strap |
| U | 1 | 3/8" plate 3" dia. |
| V | 1 | 1/2" x 15" rod |
| W | 2 | 1-1/2" x 1-1/2" x 1/4" x 4-1/2" angle |
| X | 1 | 1/4" x 3" x 6" strap |
| Y | 1 | 3/8" x 9" rod |
| Z | 2 | 28" x 12'-0" corr. metal |

Weld all non-rotating parts.
All bolts not specified are ¼".
If other tire or wheel size is used, change length of members J & L to maintain desired height.

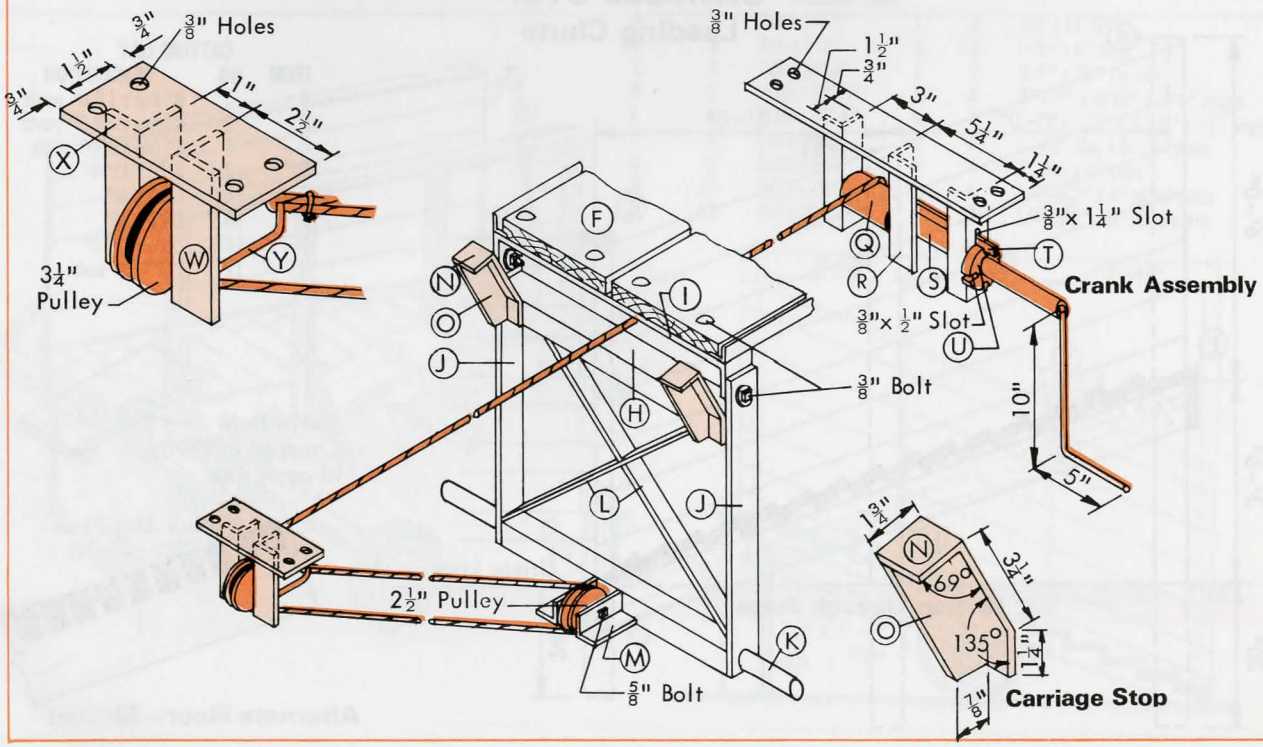

# TRAILER

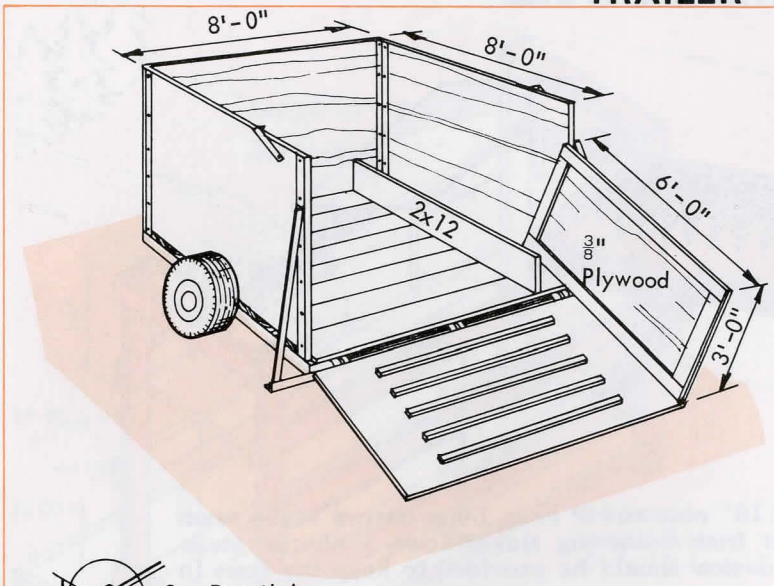


**BILL OF MATERIALS**

| NO. | DESCRIPTION |
|---|---|
| 4 | 4' x 8' x 3/4" sheets C-C grade ext. type plywood |
| 2 | 3' x 6' x 3/8" plywood |
| 9 | 2x12 x 8'-0" |
| 5 | 1x2 x 7'-0" |
| 6 | 1x4 x 6'-0" |
| 62 ft | 4" x 1-5/8" channel |
| 9 ft | 2" x 1/2" strap |
| 3 | 3" x 1-1/2" x 2" channel |
| 1 | 3/4" x 7'-4" pipe |
| 14 ft | 1" x 1" x 1/8" angle |
| 2 | 1-1/2" x 1/4" x 12" strap |
| 2 | 3" x 1-1/2" x channel |
| 1 | 3" x 1-1/2" x 12" channel |
| 1 | 1-1/2" x 1-1/2" x 1/4" x 12" angle |
| 18 | 1/4" x 1-1/2" R.H. stove bolts |
| 36 | 1/4" x 1-1/4" R.H. stove bolts |
| 16 | 1/4" x 2" R.H. stove bolts |
| 2 | 15" dia. auto wheel & hub |
| 2 ft | chain |

As required resorcinol glue (waterproof)

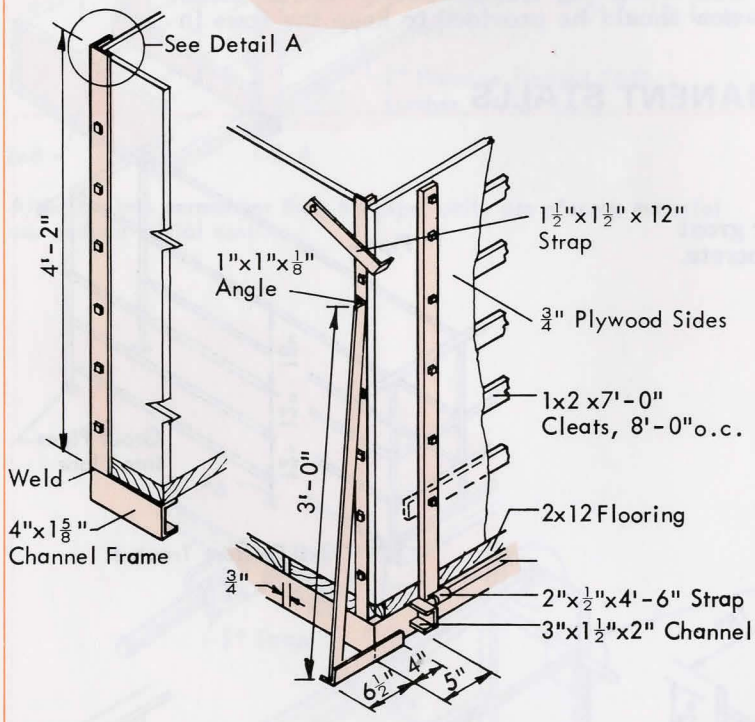


**Corner Detail**

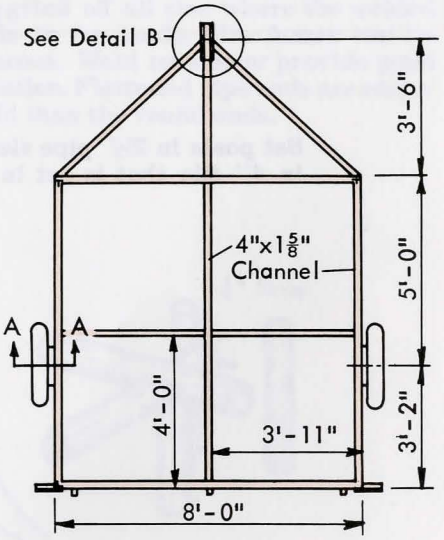


**Plan**

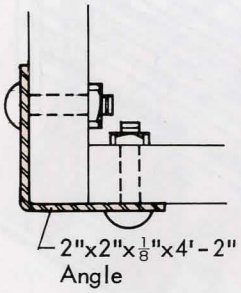


**Detail "A"**

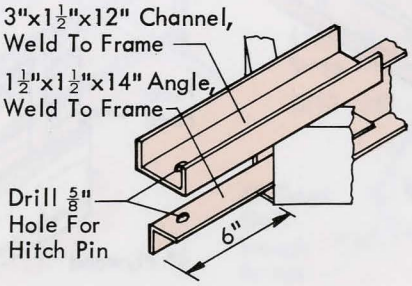


**Detail "B"**

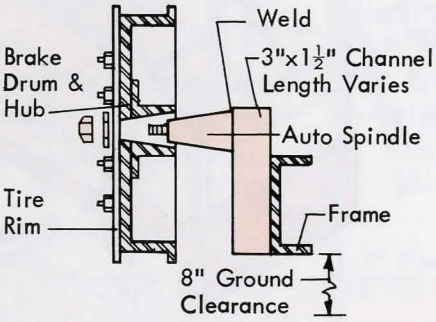


**Section A-A**

# FEEDING

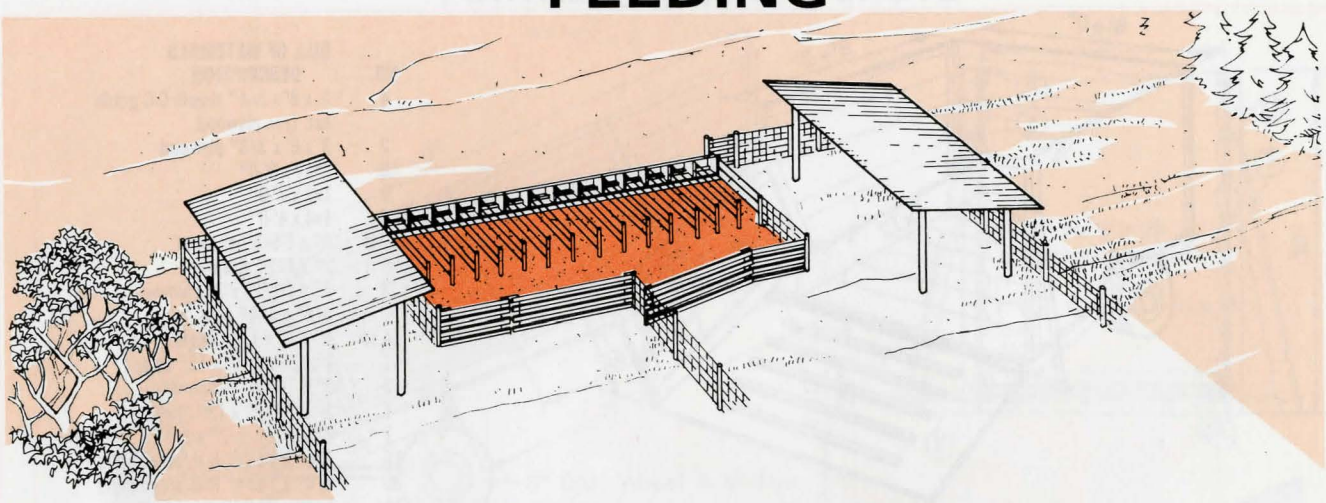

These stalls should be about 18" wide and 8' long. Long narrow stalls seem to discourage the fast eater from bothering slower sows. If shorter stalls are used, a gate or other device should be provided to keep the sows in the stalls.

## PERMANENT STALLS

**Set posts in 2½" pipe sleeves, or grout in 4" tile that is set in the concrete.**

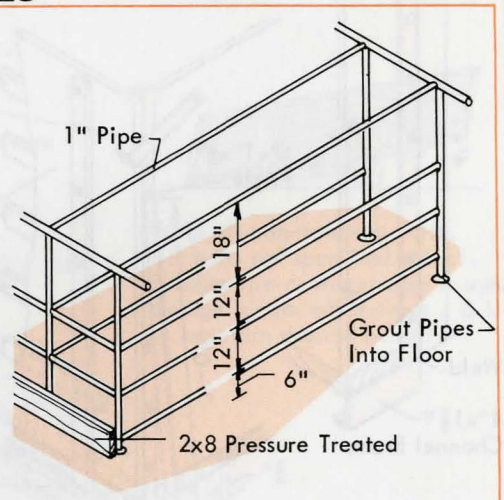


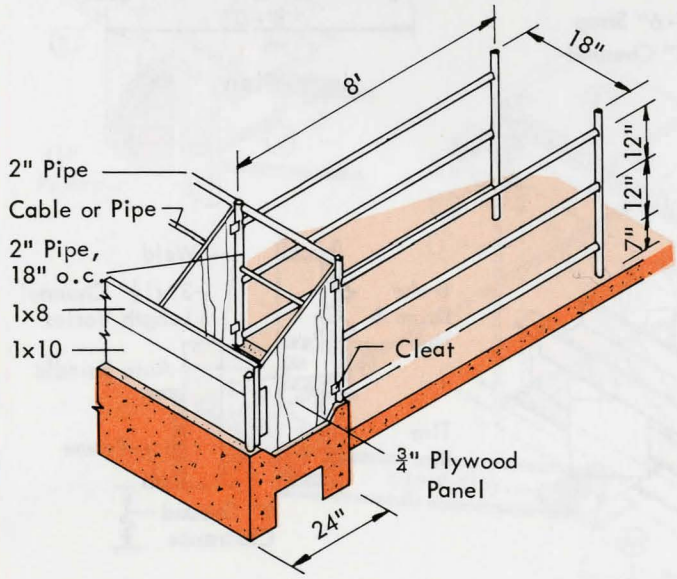


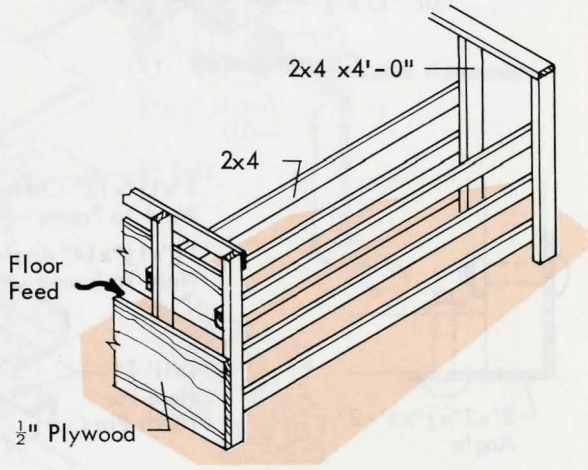

# PORTABLE STALLS

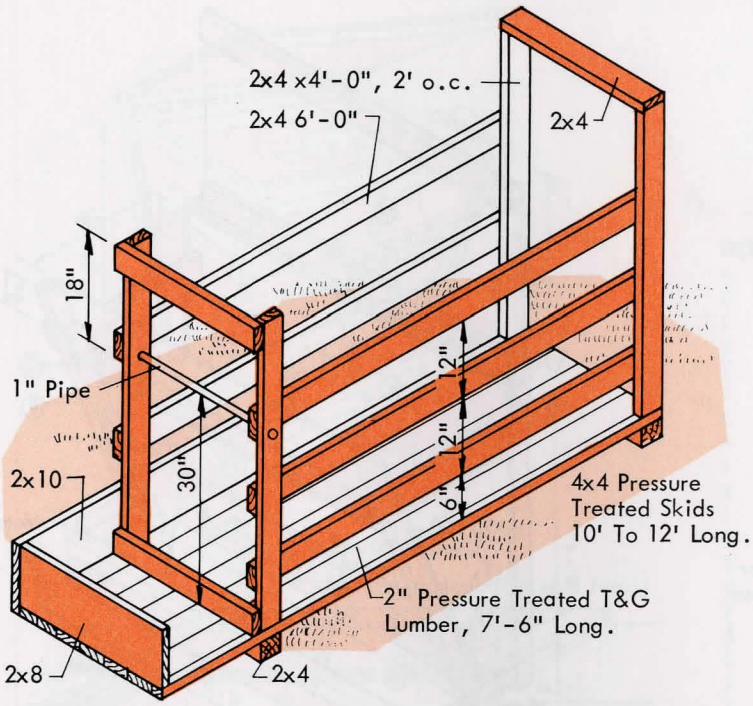


Although less permanent than the pipe unit, use of scrap material can reduce initial cost.

**Pipe**

Welded pipe construction results in a rugged unit which can be moved for periodic cleaning or from one pasture to another. The feed trough can be lifted off for cleaning.

Doors on each pen permit restraining the sow for breeding. The front-operated doors shown can be lowered from outside the feeding yard.

Solid ends and a top may be desirable in severe weather.

To make permanent, leave off the skids, and set the posts in concrete.

10' to 12' sections are easily handled.

**Welding Pipe**

Use AWS-E6011 or 6013 mild steel electrodes with 100 amps and 1/8" rods. For high carbon steel, use E6016 or 6018 electrodes. Black pipe is easier to weld than galvanized. If galvanized is used, grind off all zinc where the welded joint is to be made. Zinc fumes can be dangerous. Weld outside or provide good ventilation. Flattened pipe ends are easier to weld than the round ends.

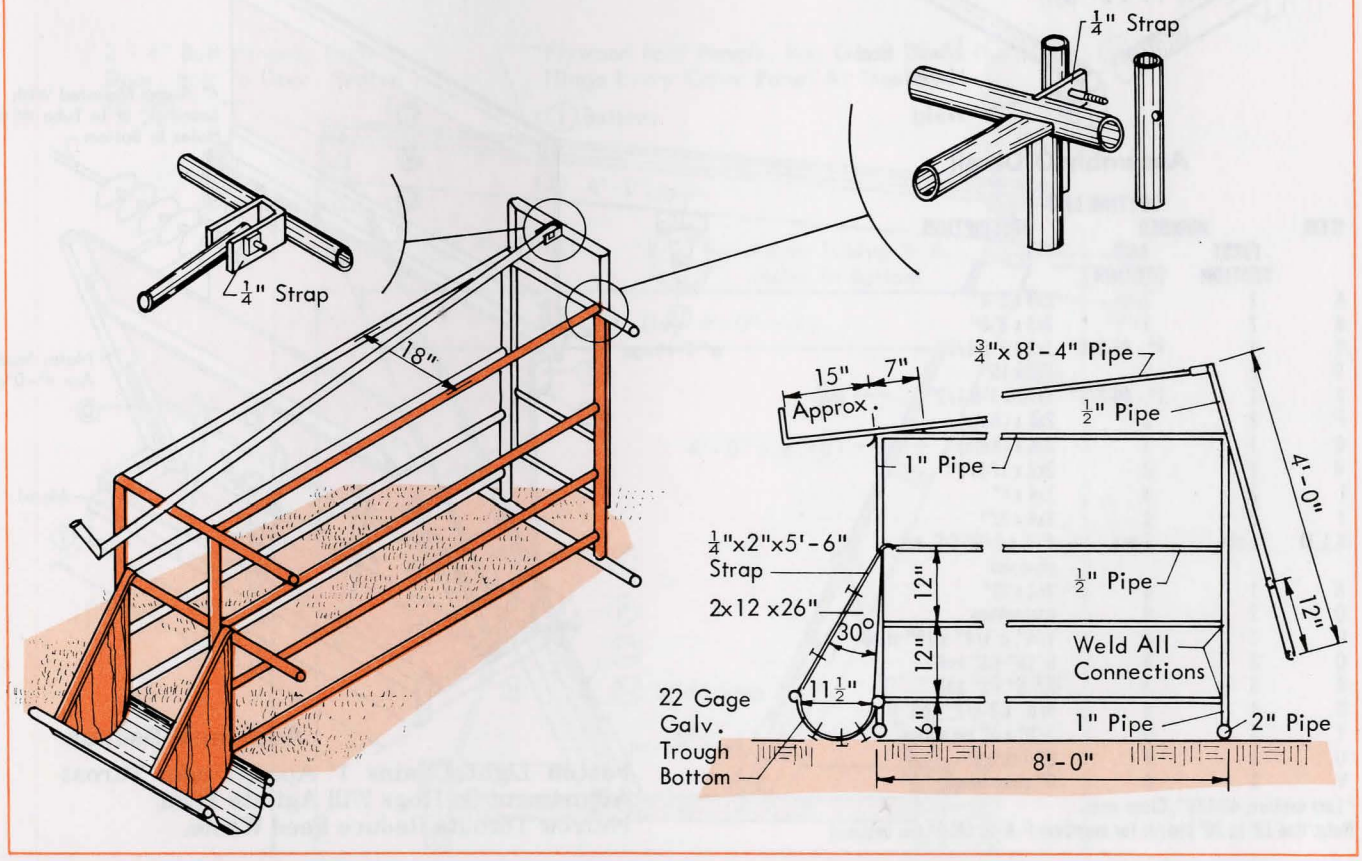

# FINISHING FEEDERS

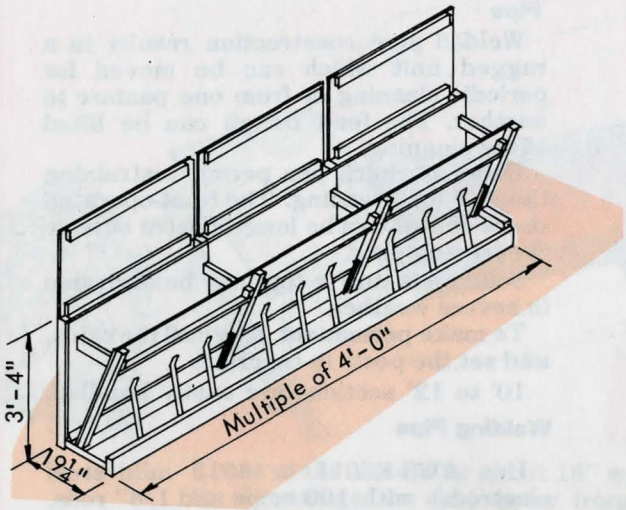


**Capacity: 8 Bu Per 4' Length**

Locate along building wall for confined finishing, or along drive or fenceline. Provide roof for outdoor use.

Reduce capacity for wet corn: Suspend auger below J Capacity 5 Bu. per 4'.

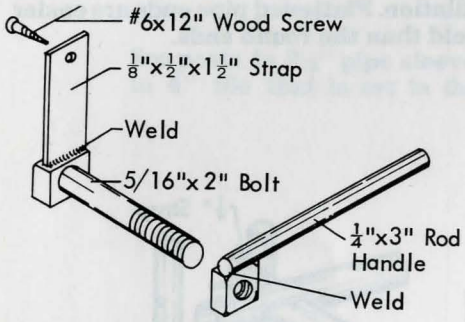


**Assembly O Detail**

**CUTTING LIST**

| ITEM | NUMBER FIRST SECTION | NUMBER ADD. SECTION | DESCRIPTION |
|---|---|---|---|
| A | 2 | 1 | 2x3 x 3'-4" |
| B | 2 | 1 | 2x3 x 3'-6" |
| C | 4 | 4* - 46-3/8" | 1x3 x 3'-9-1/2" |
| D | 2 | 2 | 1x2 x 15" |
| E | 1 | 1* - 46-3/8" | 1x10 x 3'-9-1/2" |
| F | 2 | 2 | 2x8 x (Note) |
| G | 1 | 1 | 2x6 x (Note) |
| H | 2 | 2 | 2x2 x 17-5/8" |
| I | 2 | 3 | 1x4 x 5" |
| J | 2 | 1 | 1x4 x 22" |
| K,L,M | 1 sht. | 1 sht. | 4'-8' x 3/8" C-C, ext. plywood |
| N | 1 | 1 | 2x2 x 24" |
| O | 2 | 2 | assemblies |
| P | 3 | 3 | 1/4" x 3/4" x 18" strap |
| Q | 3 | 3 | 5/16" x 1" bolt |
| R | 3 | 3 | 5/16" x 2" bolt |
| S | 4 | 2 | 3/8" x 3-1/2" bolt |
| T | 3 | 3 | 3/8" x 4" lag screw |
| U | 1 | 1 | 6" T-hinge |
| V | 1 | 0 | 6" strap hinge |

*Last section, 45-1/2". Close ends.
Note: Use 12' to 20' boards for members F & G. (4'-0" per section)

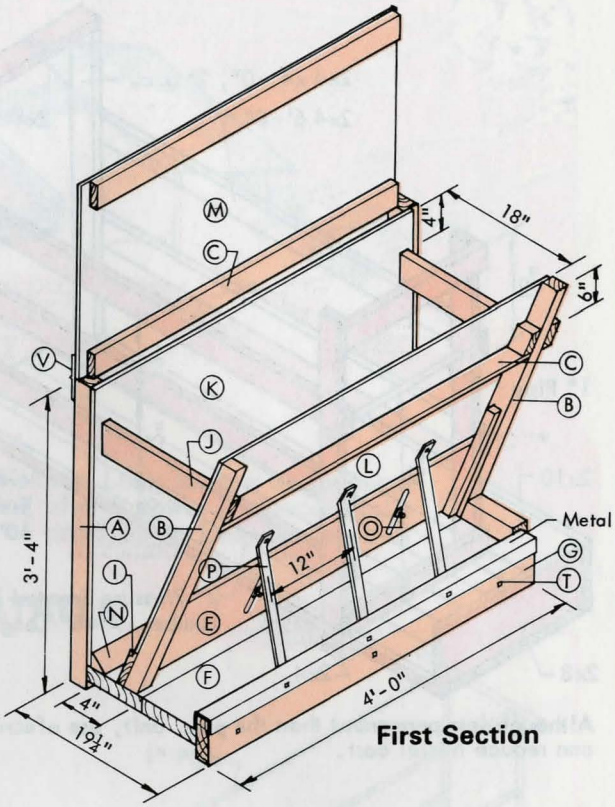


**First Section**

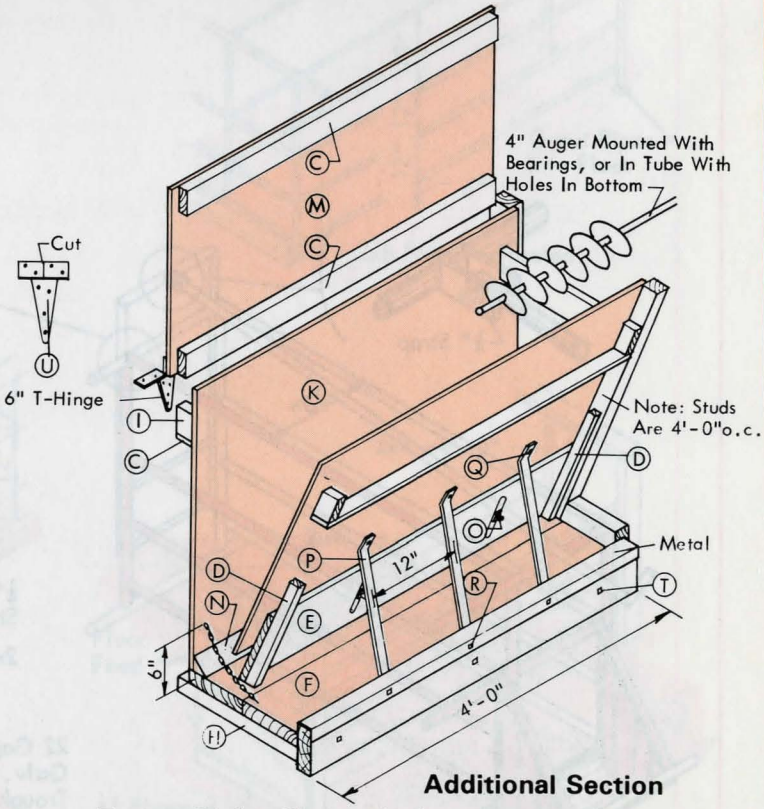


**Additional Section**

Fasten Light Chains 1' Apart Under Throat Adjustment So Hogs Will Agitate Feed. Narrow Throats Reduce Feed Waste.

# FINISHING FEEDER

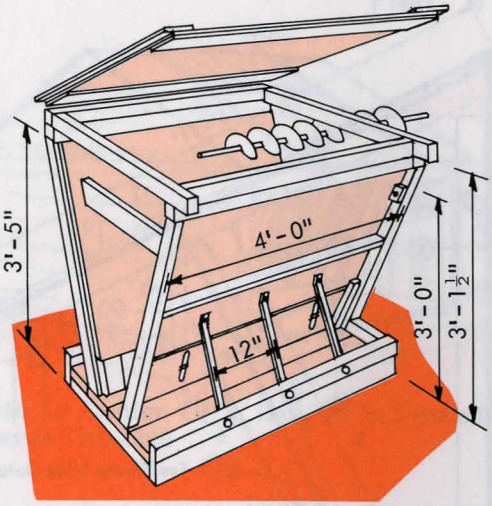


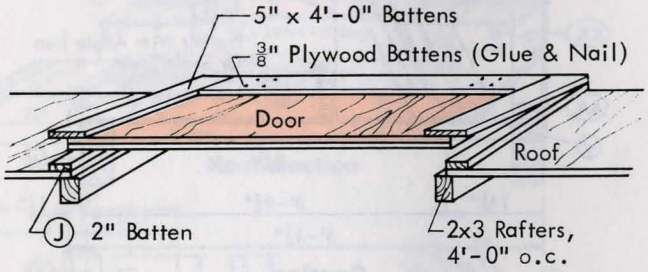


**Roof Section Thru Door**

**Capacity: 13 Bu Per 4' Length**
**32 Pigs Per 4' Length**

Locate Along Pen Partitions, Or Fencelines, Or A Sloping Concrete Apron. Provide Roof For Outdoor Use.

**CUTTING LIST**

| ITEM | 1ST SECTION DESCRIPTION | NO. | ADDITIONAL SECTION NO. |
|---|---|---|---|
| A | 2x3 x 4'-0" | 2 | 1 |
| B | 2x3 x 39-1/2" | 2 | 2 |
| C | 2x3 x 42-1/2" | 2 | 1 |
| D | 2x3 x 46-3/8" | 2 | 2 |
| E | 2x8 x 49-5/8" | 4 (Note) | 4 - 48" |
| F | 2x6 x 49-5/8" | 2 (Note) | 2 - 48" |
| G | 1 x 4 x 3'-6" | 2 | 1 |
| H | 1 x 3 x 46-3/8" | 2 | 2 |
| I | 3/8" x 5" x 4'-0" (plywood) | 5 | 0 |
| K | 2x3 x 49-5/8" | 2 (Note) | 2 |
| L | 3'-3" x 4'-0" x 3/8" (plywood) | 1 | 1 |
| M | 2'-9" x 4'-0" x 3/8" (plywood) | 1 | 1 |
| N | 1x4 x 5" | 4 | 4 |
| O | 1x10 x 46-3/8" | 2 | 2 |
| P | 1x2 x 15" | 4 | 4 |
| Q | 1/4" x 3/4" x 16" metal bar | 6 | 6 |
| R | 5/16" bolt | 6 | 6 |
| S | 3/8" bolt | 4 | 2 |
| T | 1-1/2" x 24-gage x 5" strap | 4 | 2 |
| U | 5-5/8" x 24-gage x 49-5/8" | 2 | 2 |
| V | 4' x 4' x 3/8" (plywood) | 1 | 1 |
| W | Provide plywood for ends | 2 | 0 |
| X | 2x2 x 30" | 2 | 2 |

Note: Use 12' to 20' boards for members E, F, & K. (4'-0" per section)

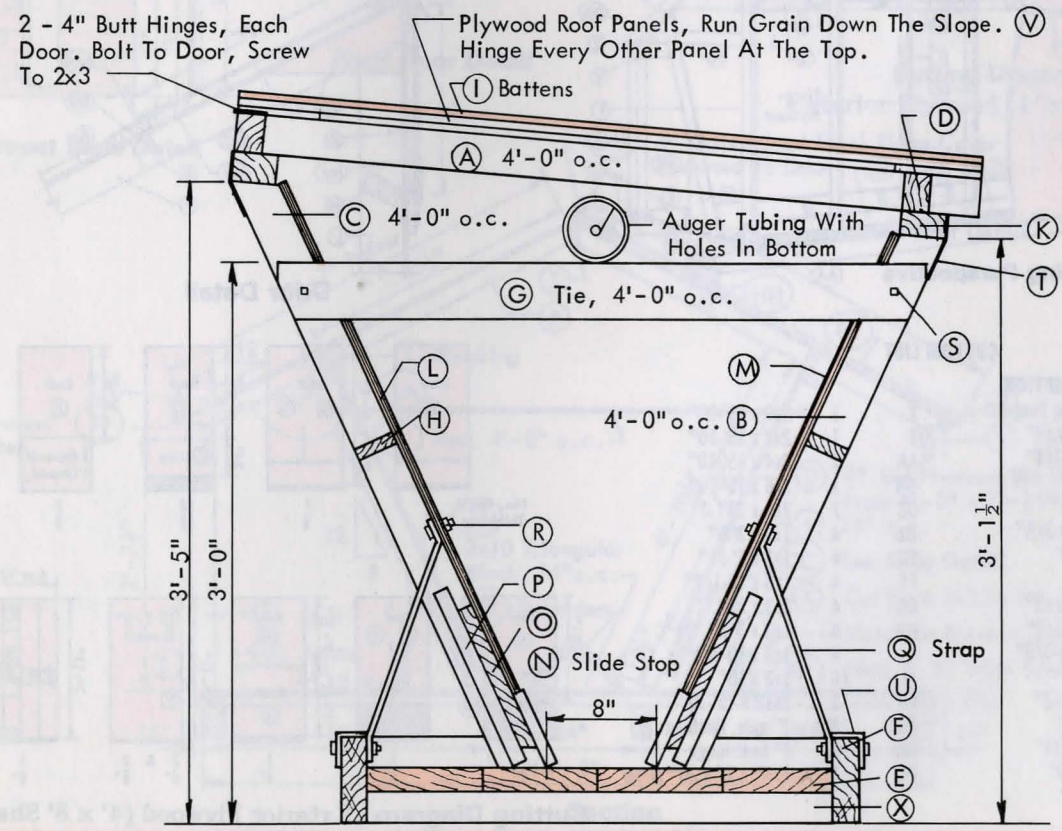

# WALK-IN SELF-FEEDER

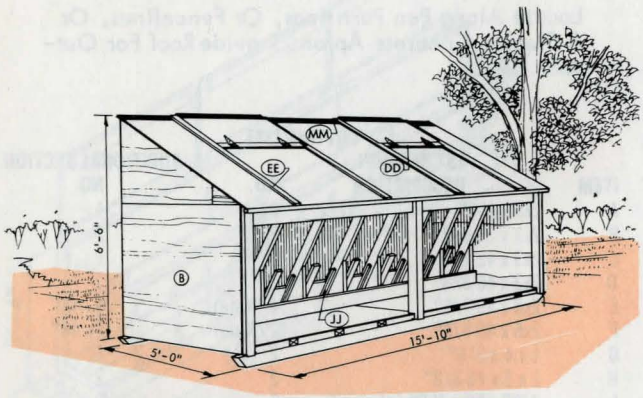


## Plan "A", 150 Bu—64 Pigs

Locate Next To Drive For Easy Filling

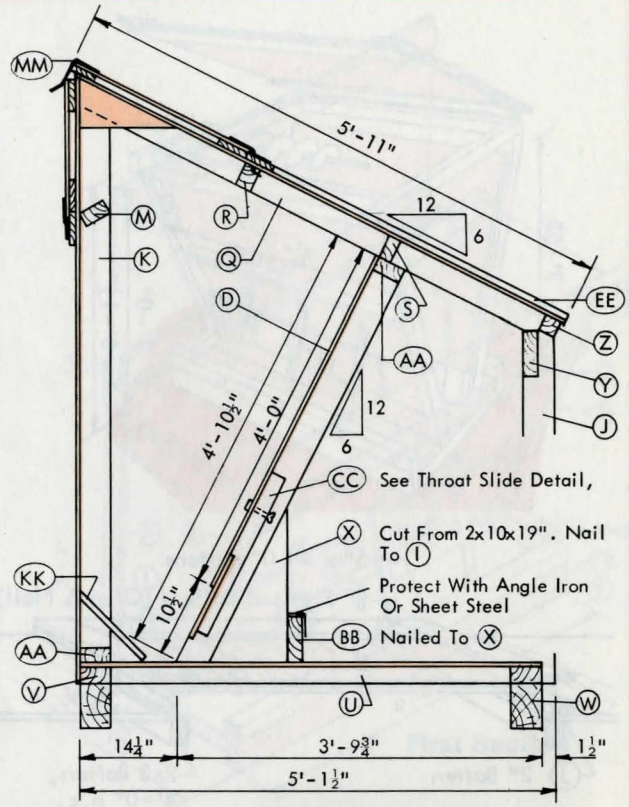


## Section

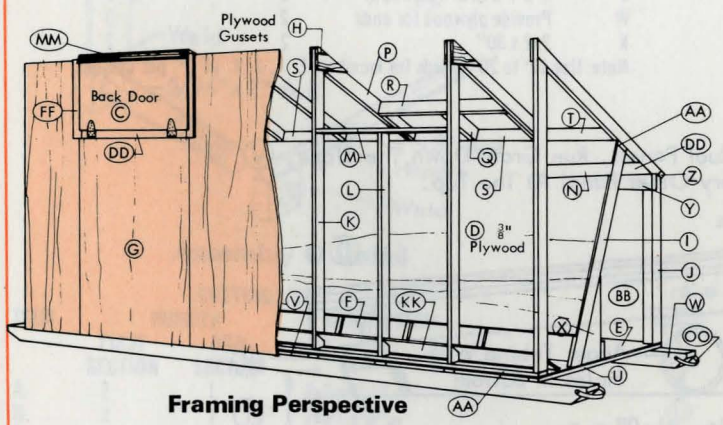


## Framing Perspective

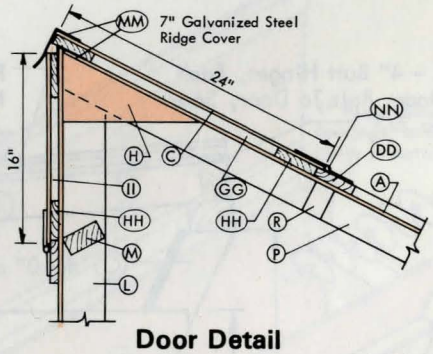


## Door Detail

### CUTTING LIST

| ITEM | NO. | DESCRIPTION | | | |
|---|---|---|---|---|---|
| A-H | | See Cutting Diagram | Y | 1 | 2x6 x 15'-10" |
| I | 9 | 2x4 x 4'-8-7/8" | Z | 1 | 2x2 x 15'-10" |
| J | 3 | 4x4 x 3'-9-3/4" | AA | 2 | 2x4 x 15'-10" |
| K | 7 | 2x4 x 6'-0" | BB | 1 | 2x6 x 15'-10" |
| L | 2 | 2x4 x 4'-11" | CC | 7 | 2x4 x 23" |
| M | 2 | 2x4 x 3'-10-3/8" | DD | 4 | 1x3 x 3'-9" |
| N | 2 | 2x4 x 3'-0" | EE | 4 | 1x3 x 5'-11" |
| O | 2 | 2x4 x 15" | FF | 4 | 1x3 x 17-1/2" |
| P | 7 | 2x3 x 5'-7-1/2" | GG | 4 | 1x3 x 23" |
| Q | 6 | 2x3 x 3'-6-1/2" | HH | 8 | 1x3 x 3'-3" |
| R | 2 | 2x3 x 3'-10-3/8" | II | 4 | 1x3 x 10-3/4" |
| S | 6 | 2x3 x 21" | JJ | 16 | 1x2 x 15" |
| T | 2 | 2x3 x 19-1/2" | KK | 1 | 1x12 x 15'-10" |
| U | 9 | 2x4 x 5'-0" | MM | 18 ft | 7" galv. flashing |
| V | 16 | 2x4 x 20-3/4" | NN | 8 | 3" butt hinge |
| W | 2 | 4x6 x 18'-0" | OO | 2 | 1/4" x 2" x 20" strap |
| X | 9 | 2x10 x 19" | | | |

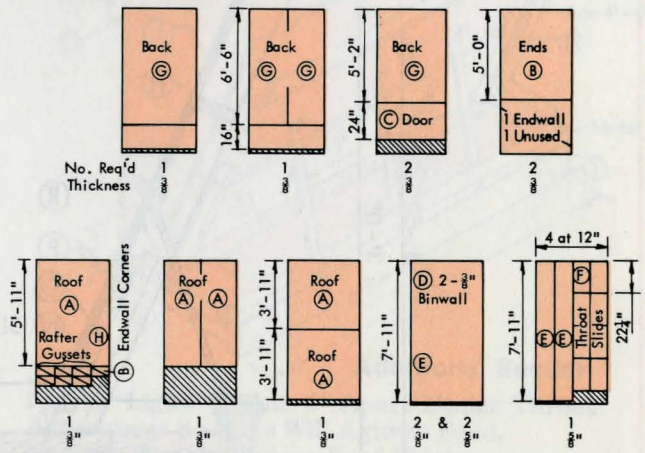


**Cutting Diagram** Exterior Plywood (4' x 8' Sheets)

# Plan "B", 150 Bu—64 Pigs

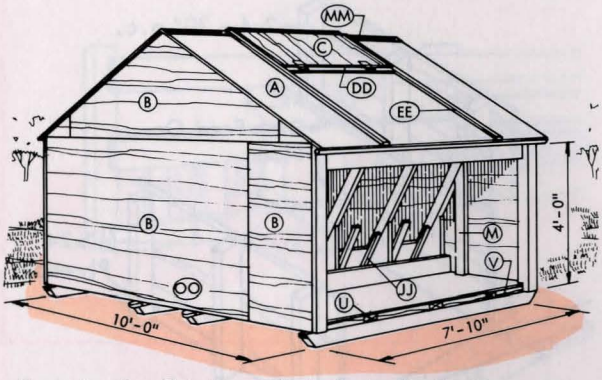


Locate In Center Of A Lot, Or In Fenceline To Serve Two Lots

**CUTTING LIST**

| ITEM | NO. | DESCRIPTION | ITEM | NO. | DESCRIPTION |
|---|---|---|---|---|---|
| A-H | | See Plywood Cutting Diagram | Y | 2 | 2x6 x 7'-10" |
| I | 10 | 2x4 x 4'-8-7/8" | Z | 2 | 2x2 x 7'-10" |
| J | 4 | 4x4 x 3'-9-3/4" | AA | 2 | 2x4 x 7'-10" |
| K | 2 | 2x4 x 3'-8-3/8" | BB | 2 | 2x6 x 7'-10" |
| L | 2 | 2x4 x 25" | CC | 8 | 2x4 x 23" |
| M | 4 | 2x4 x 33" | DD | 1 | 1x3 x 3'-9" |
| N | 4 | 2x4 x 15" inside batten | EE | 2 | 1x3 x 5'-11" |
| O | 4 | 2x4 x 6'-1" | FF | | See Cutting Diagram |
| P | 9 | 2x3 x 5'-7" | GG | 2 | 1x3 x 23" |
| Q | 3 | 2x3 x 3'-6-1/2" | HH | 2 | 1x3 x 3'-3" |
| R | 1 | 2x3 x 4'-0" | JJ | 16 | 1x2 x 15" |
| S | 1 | 2x4 x 7'-10" | KK | 2 | 1x12 x 7'-10" |
| T | 4 | 2x3 x 21-1/2" | LL | 1 | 1/2" x 7'-0" rod |
| | 4 | 2x3 x 19-1/4" | MM | 10 ft | 5" galv. flashing |
| U | 5 | 2x4 x 10'-0" | NN | 2 | 3" butt hinge |
| V | 8 | 2x4 x 20-3/4" | OO | 2 | 1/4" x 2" x 20" strap |
| W | 4 | 4x6 x 9'-0" pressure-treated | | | |
| X | 10 | 2x10 x 19" | | | Glue All Plywood Joints |

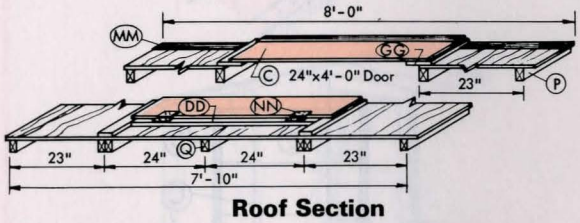


**Roof Section**

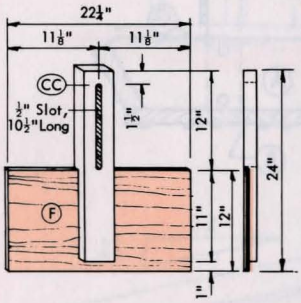


**Throat Slide Detail**

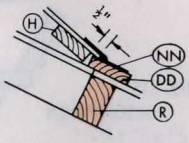


**Roof Door Detail**

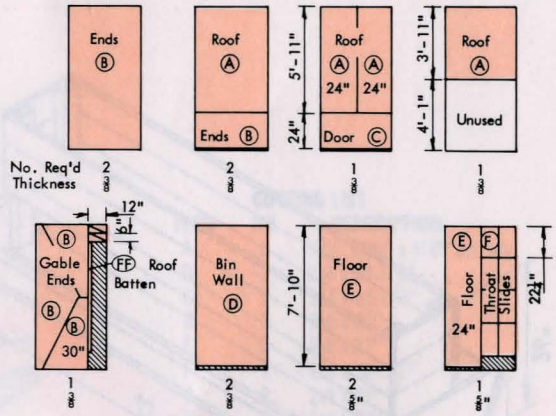


**Cutting Diagrams**

Exterior Plywood (4' x 8' Sheets)

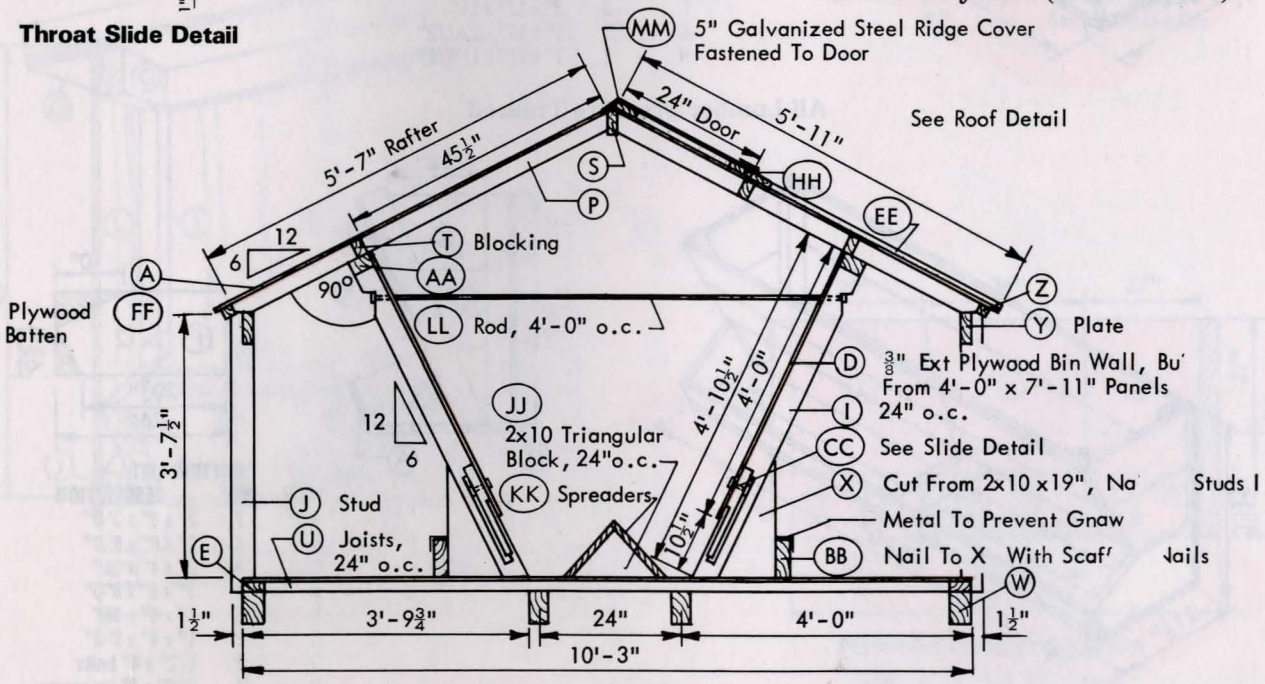


**Section**

# FENCELINE FEEDERS

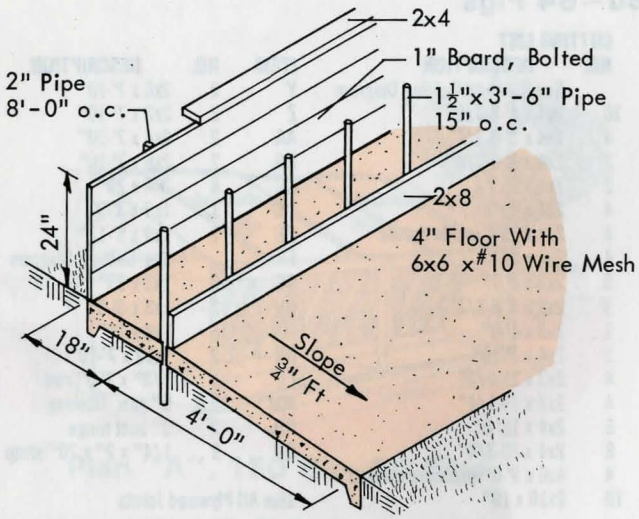


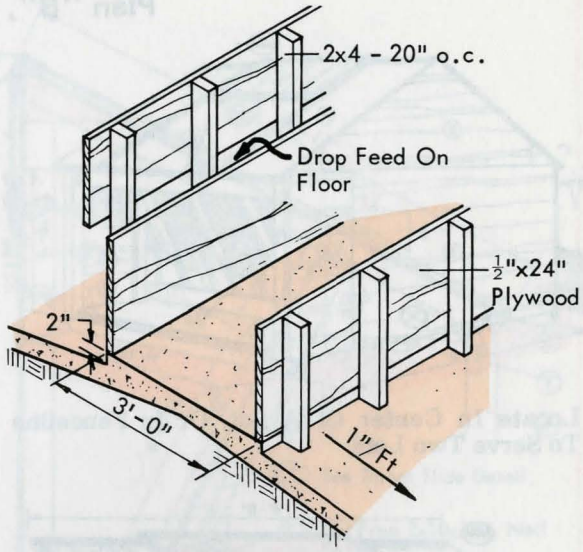


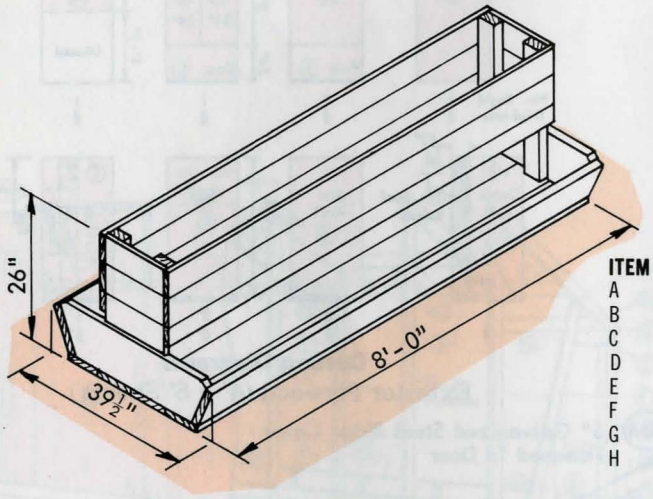


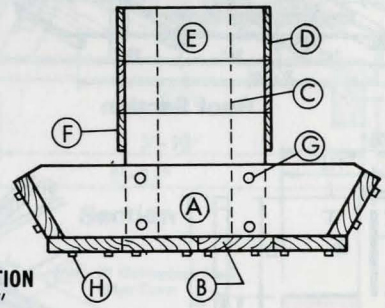


**CUTTING LIST**

| ITEM | NO. | DESCRIPTION |
|---|---|---|
| A | 4 | 2" x 8" x 8'-0" |
| B | 5 | 1" x 12" x 7'-10" |
| C | 1 | 2" x 6" x 24" |
| D | 2 | 2" x 4" x 34-1/2" |
| E | 2 | 2" x 4" x 3'-3" |
| F | 2 | 2" x 12" x 24" |
| G | 2 | 1" x 12" x 22-1/2" |
| H | 2 | 1" x 12" x 17-1/2" |

All Lumber Pressure-Treated

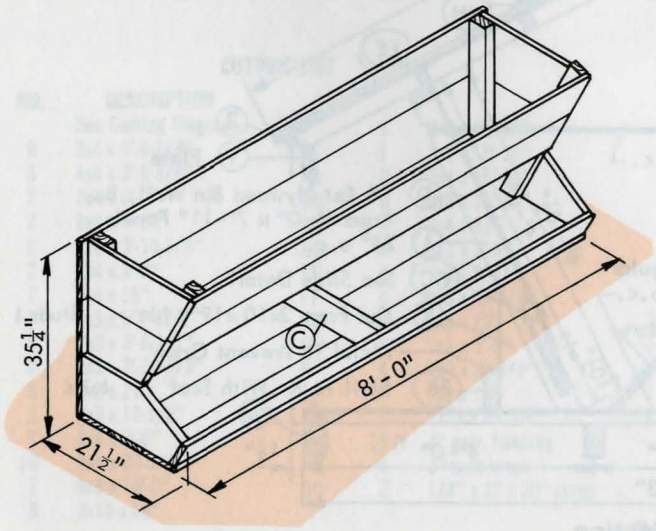


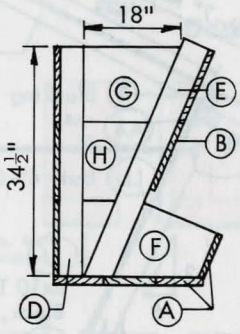


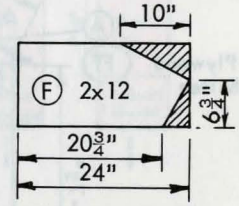


**CUTTING LIST**

| ITEM | NO. | DESCRIPTION |
|---|---|---|
| A | 2 | 2" x 8" x 3'-0" |
| B | 6 | 2" x 8" x 8'-0" |
| C | 4 | 2" x 4" x 24" |
| D | 4 | 1" x 6" x 8'-0" |
| E | 6 | 1" x 6" x 15" |
| F | 2 | 1" x 4" x 8'-0" |
| G | 8 | 1/2" x 4" bolts |
| H | 24 | 3/8" x 3" lag screws |

## CREEP FENCE

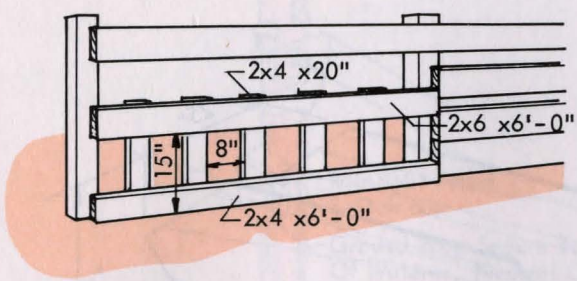


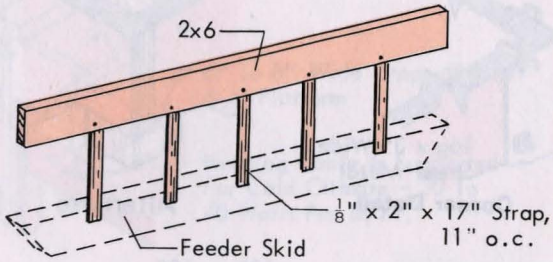


## MINERAL FEEDER

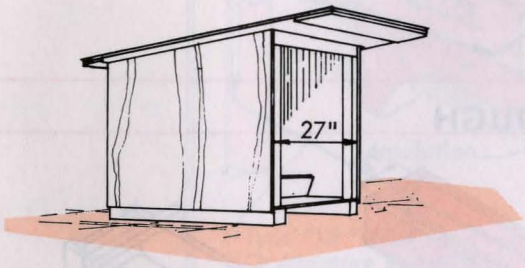


**CUTTING LIST**

| ITEM | NO. | DESCRIPTION |
|---|---|---|
| A | 1 | 3/8" x 30" x 4'-0" ext. ply. |
| B | 2 | 2x4 x 30-3/8" |
| C | 2 | 3x4 x 33-1/2" |
| D | 1 | 2x6 x 27" |
| E | 1 | 2x8 x 27" |
| F | 1 | 2x6 x 12-1/2" |
| G | 2 | 2x4 x 27" |
| H | 2 | 2x4 x 30" |
| I | 2 | 2x4 x 21-3/4" |
| J | 1 | 2x4 x 27" beveled |
| K-P | | See Cutting Diagram |

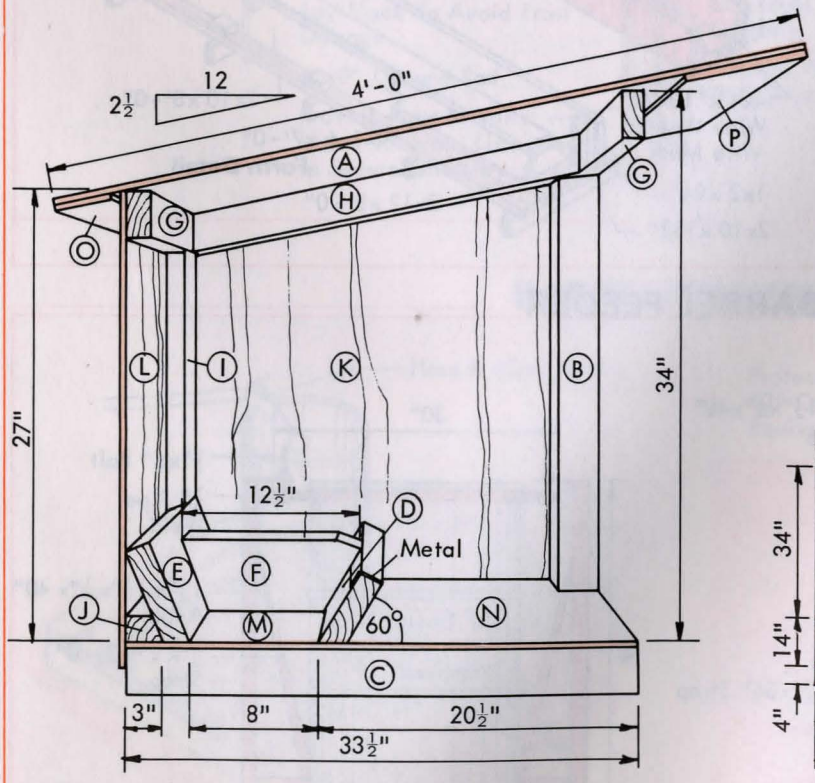


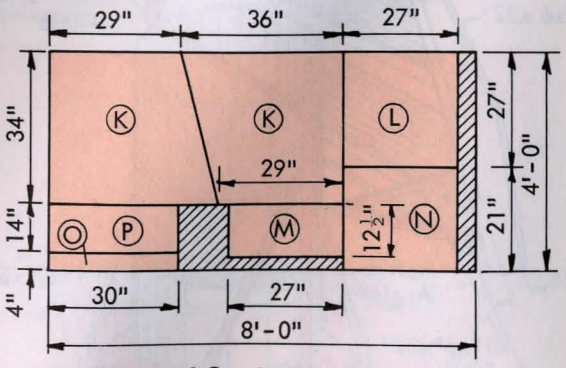


**Plywood Cutting Diagram**
3/8" C-C Ext Plywood

## FEED CART

**10 Bu**

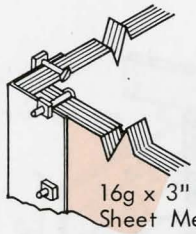


**Corner Detail**

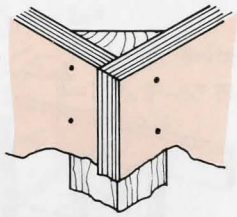

**Alternate**

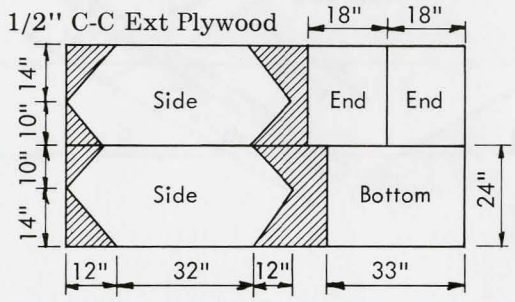


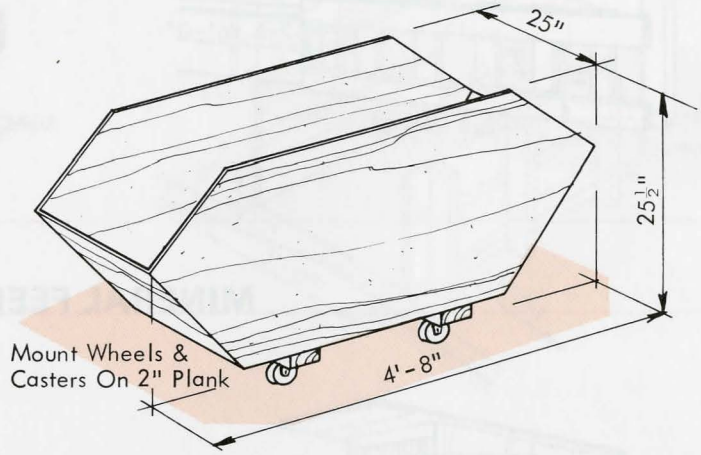


## CONCRETE TROUGH

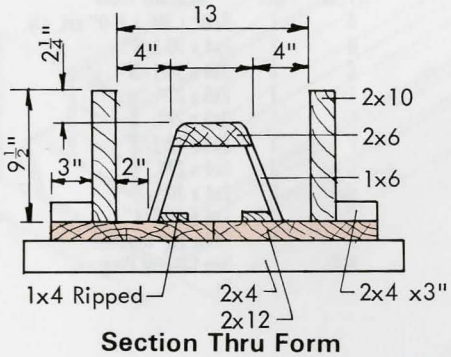


**Section Thru Form**

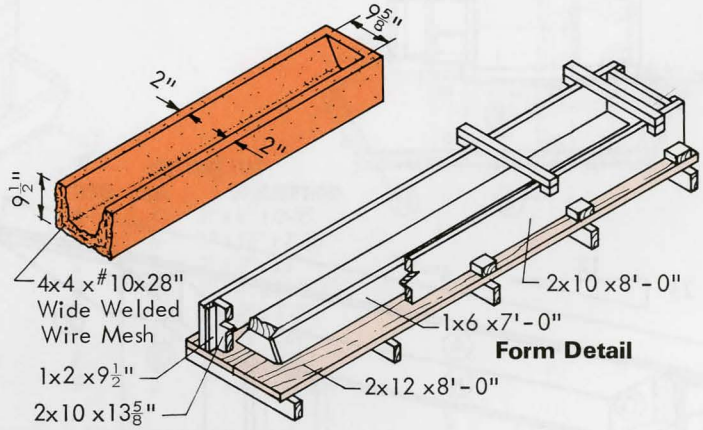


**Form Detail**

## BARREL FEEDER

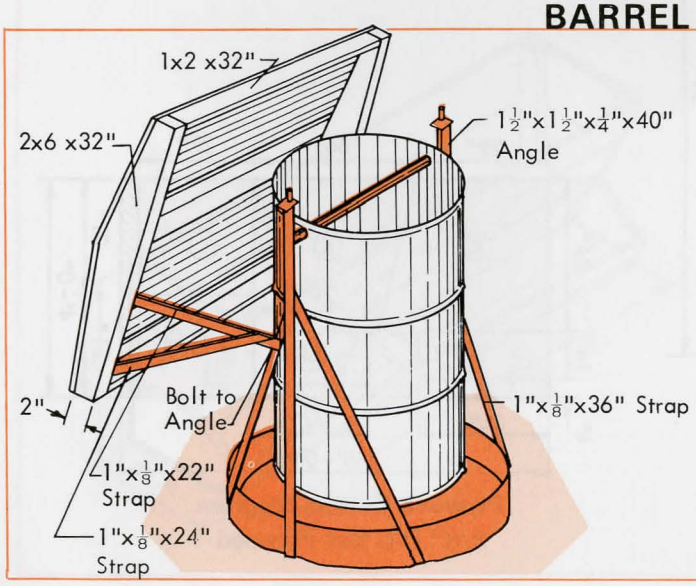


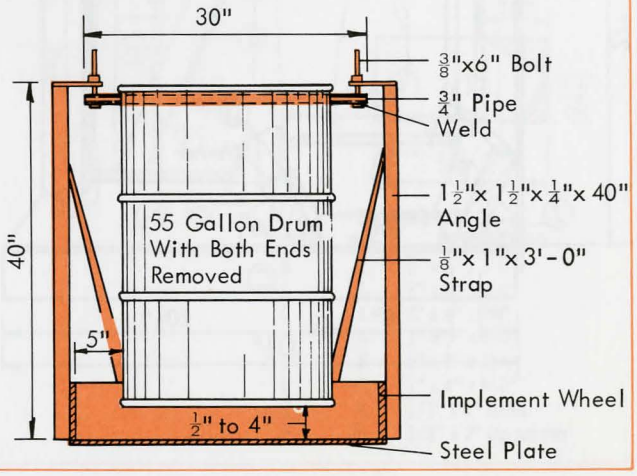

## WATERER

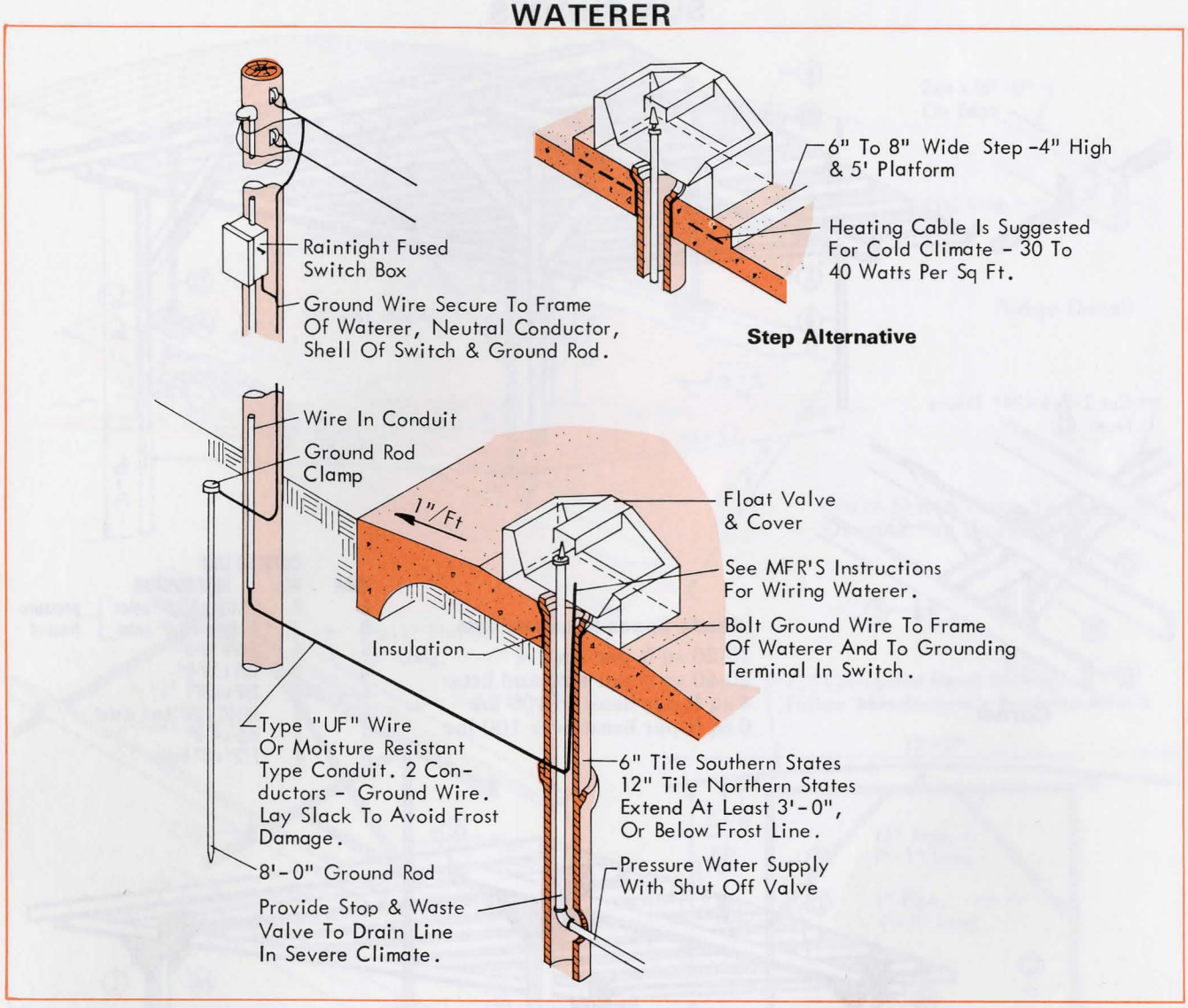


## BARREL WATERER

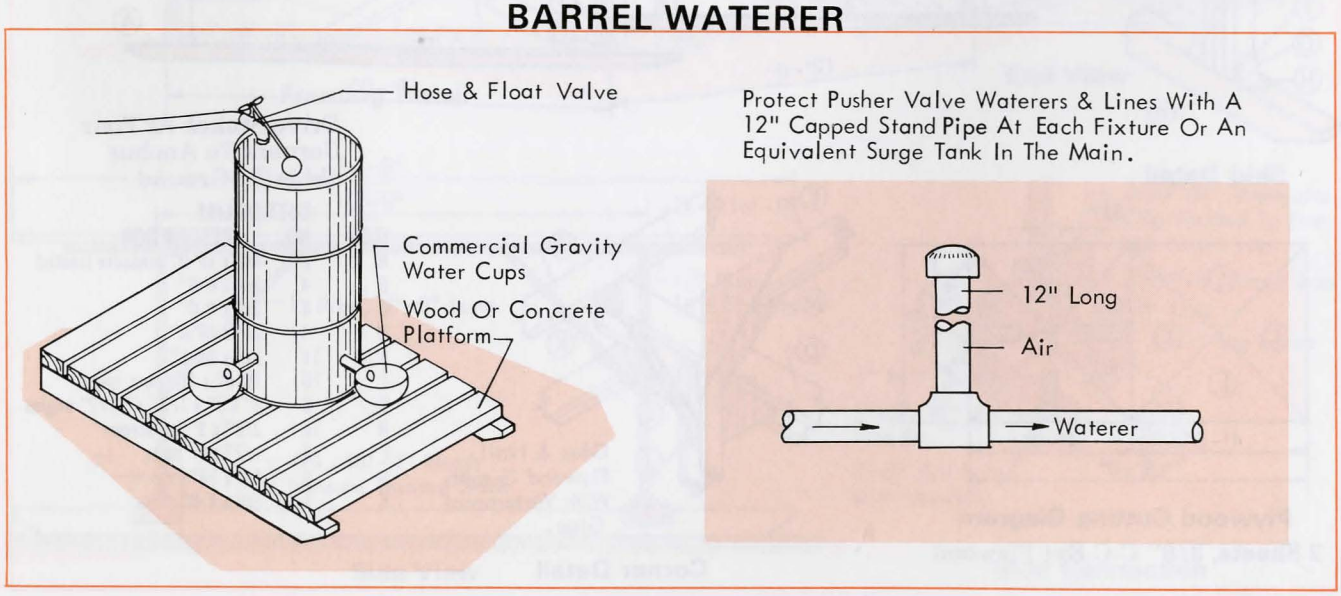

# SUN SHADES

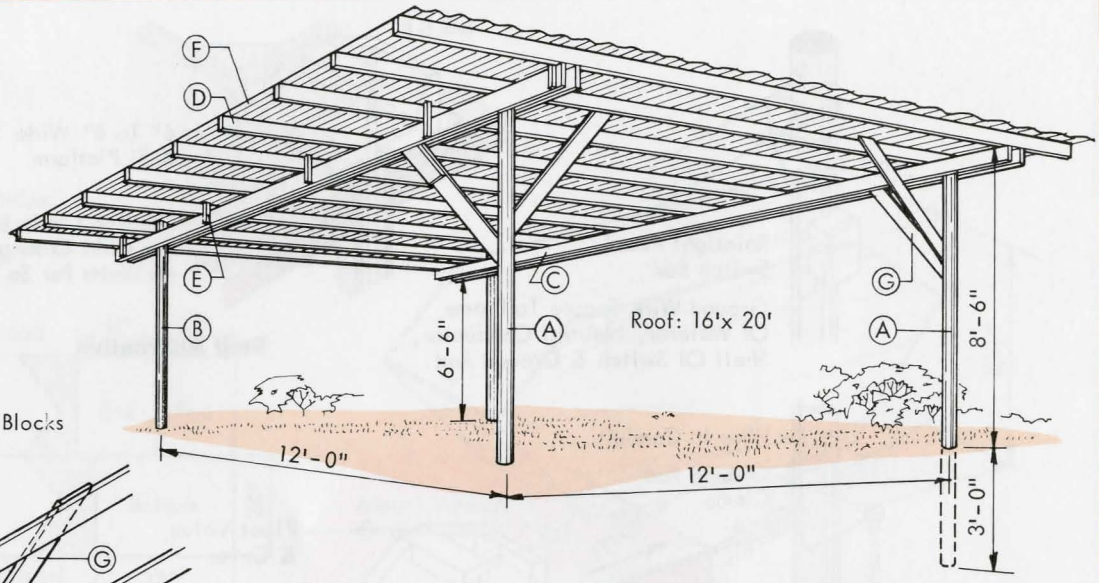


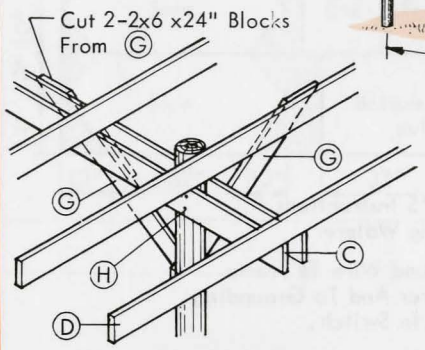


**Corner**

**Shade Space Requirements**

15-20 sq ft per sow
20-40 sq ft per sow and litter
4 sq ft per head to 100 lbs
6 sq ft per head over 100 lbs

**CUTTING LIST**

| ITEM | NO. | DESCRIPTION |
|---|---|---|
| A | 2 | 4" top x 12'-0" poles — pressure-treated |
| B | 2 | 4" top x 10'-0" poles — pressure-treated |
| C | 4 | 2x6 x 16'-0" |
| D | 9 | 2x6 x 20'-0" |
| E | 10 | 2x2 x 12" |
| F | 10 | 16'-0" x 26" corr. metal |
| G | 5 | 2x6 x 4'-0" |
| H | 8 | 1/2" x 9" bolts |

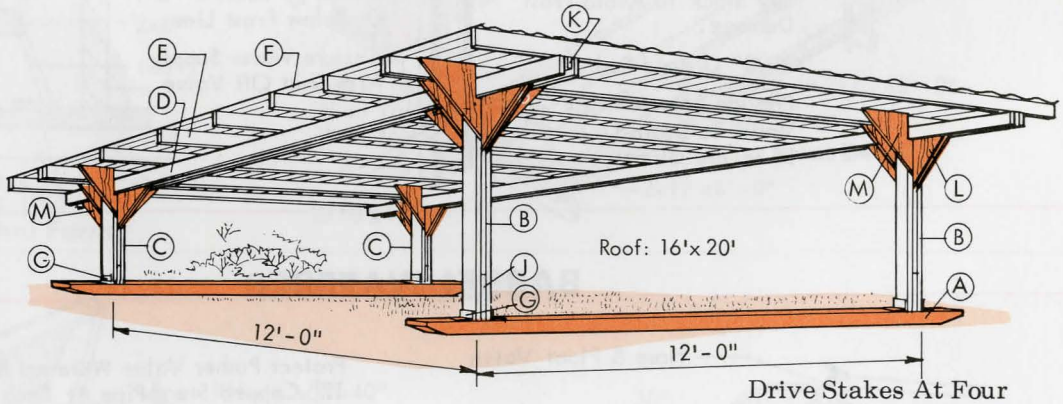


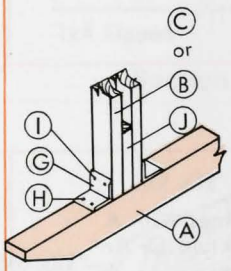


**Skid Detail**

Drive Stakes At Four Corners To Anchor Skids To Ground

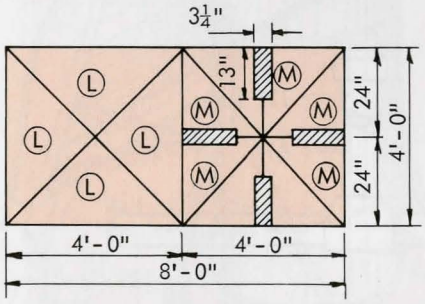


**Plywood Cutting Diagram**

2 Sheets, 3/8" C-C Ext Plywood

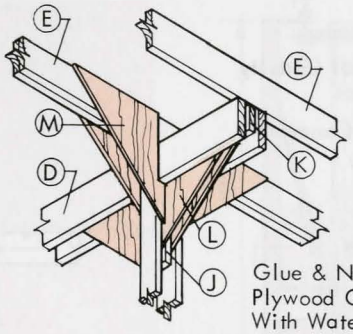


Glue & Nail Plywood Gussets With Waterproof Glue.

**Corner Detail**

**CUTTING LIST**

| ITEM | NO. | DESCRIPTION |
|---|---|---|
| A | 2 | 4x6 x 16'-0" pressure treated |
| B | 4 | 2x4 x 6'-0" |
| C | 4 | 2x4 x 4'-0" |
| D | 4 | 2x8 x 16'-0" |
| E | 11 | 2x6 x 20'-0" |
| F | 10 | 16'-0" x 26" corr. metal |
| G | 8 | 3" x 3" x 1/3" x 3-1/2" angles |
| H | 16 | 3/8" x 3" lag screws |
| I | 8 | 1/2" x 9" bolts |
| J | 8 | 2x4 x 12" |
| K | 4 | 2x6 x 4'-0" |

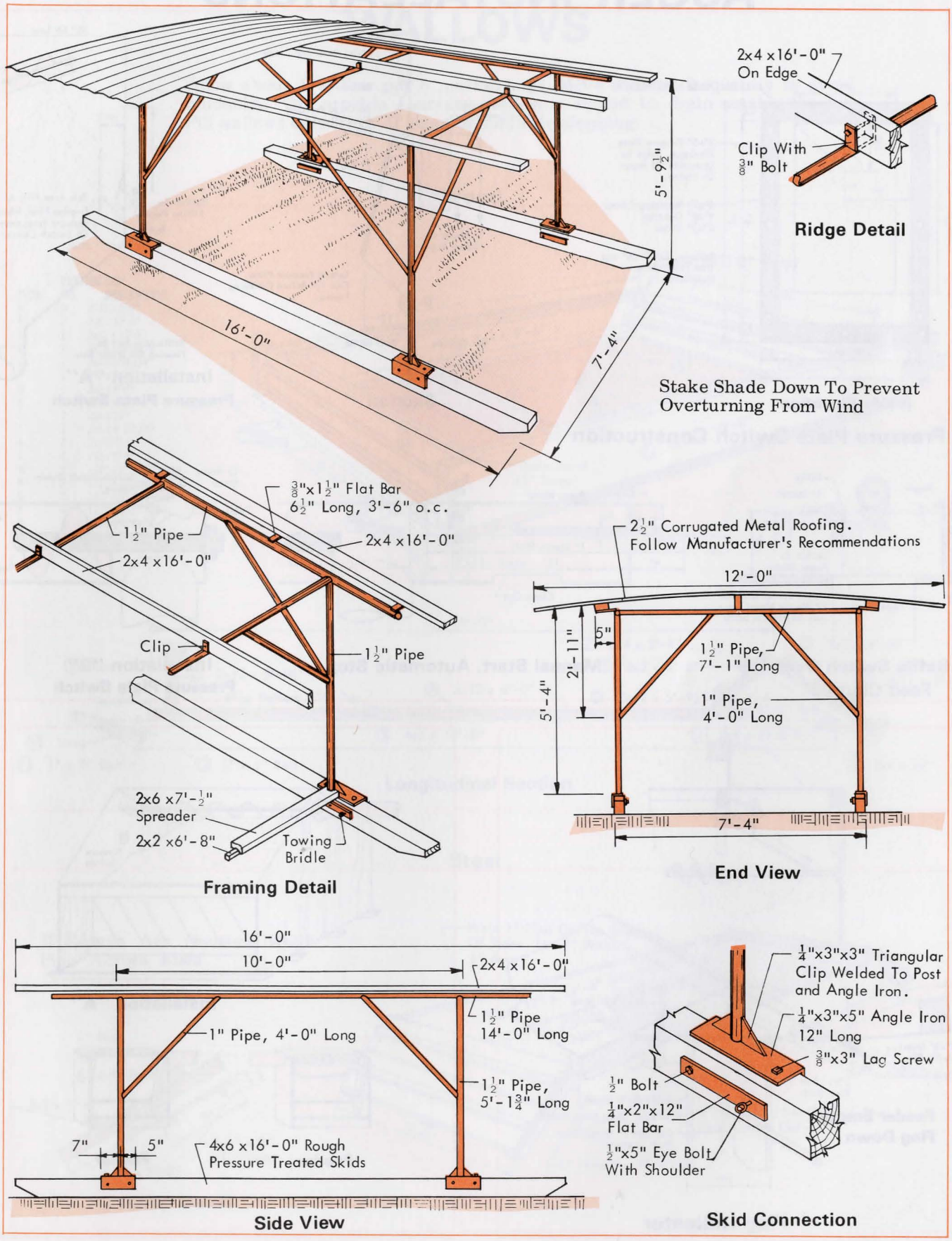
2x4 x16'-0"
On Edge
Clip With
3/8" Bolt
Ridge Detail
5'-9 1/2"
16'-0"
7'-4"
Stake Shade Down To Prevent
Overturning From Wind
3/8"x1 1/2" Flat Bar
6 1/2" Long, 3'-6" o.c.
1 1/2" Pipe
2x4 x16'-0"
2x4 x16'-0"
Clip
1 1/2" Pipe
2x6 x7'-1/2"
Spreader
2x2 x6'-8"
Towing
Bridle
Framing Detail
2 1/2" Corrugated Metal Roofing.
Follow Manufacturer's Recommendations
12'-0"
5"
2'-11"
5'-4"
1 1/2" Pipe,
7'-1" Long
1" Pipe,
4'-0" Long
7'-4"
End View
16'-0"
10'-0"
2x4 x16'-0"
1" Pipe, 4'-0" Long
1 1/2" Pipe
14'-0" Long
1 1/2" Pipe,
5'-1 3/4" Long
7"
5"
4x6 x16'-0" Rough
Pressure Treated Skids
Side View
1/4"x3"x3" Triangular
Clip Welded To Post
and Angle Iron.
1/4"x3"x5" Angle Iron
12" Long
3/8"x3" Lag Screw
1/2" Bolt
1/4"x2"x12"
Flat Bar
1/2"x5" Eye Bolt
With Shoulder
Skid Connection

# AUGER INSTALLATIONS

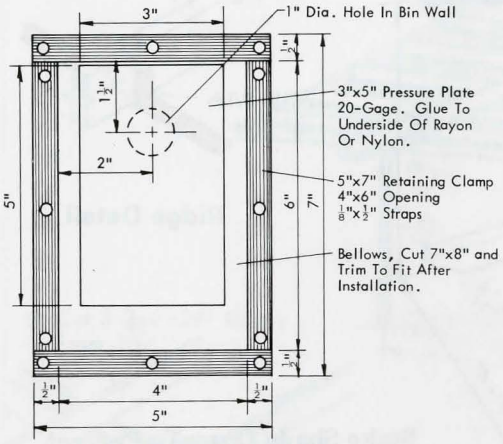


**Inside Elevation**

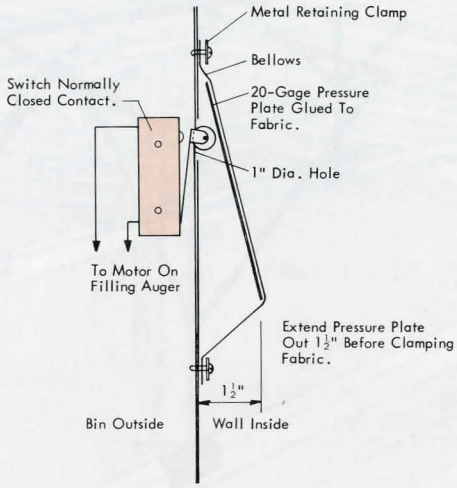


**Section**

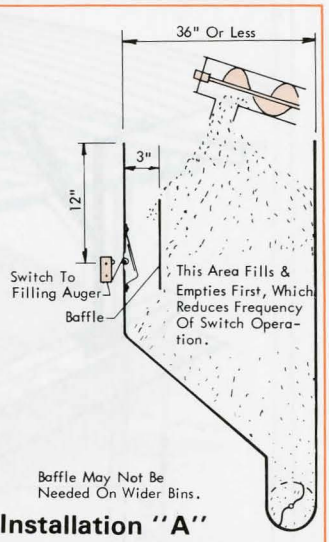


**Installation "A"**
**Pressure Plate Switch**

## Pressure Plate Switch Construction

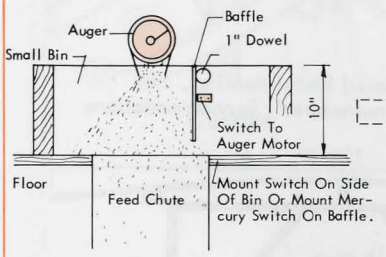


**Baffle Switch Over Feed Chute**

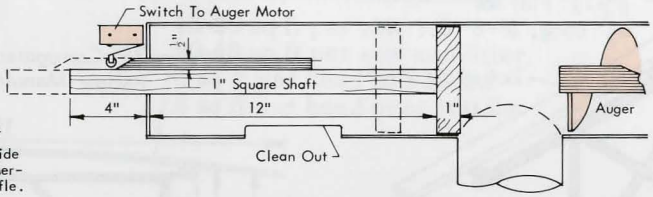


**Manual Start, Automatic Stop**

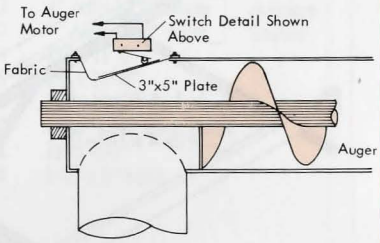


**Installation "B"**
**Pressure Plate Switch**

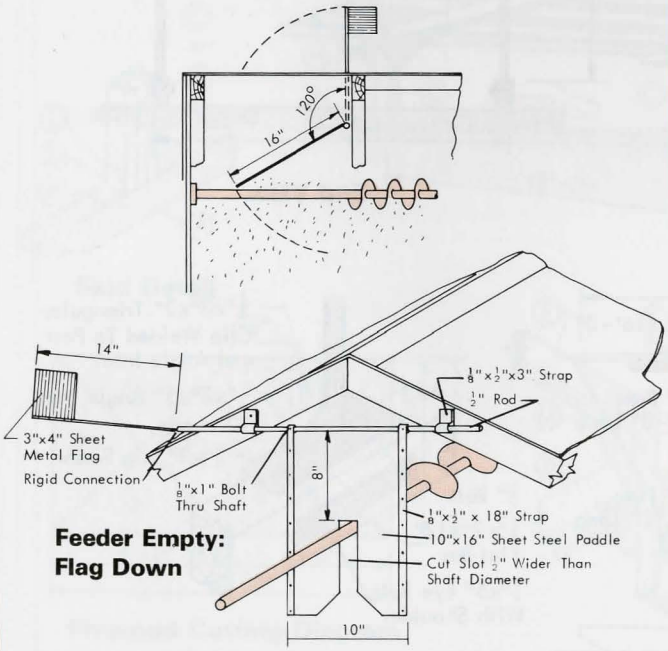


**Feeder Empty: Flag Down**

**Flag Indicator**

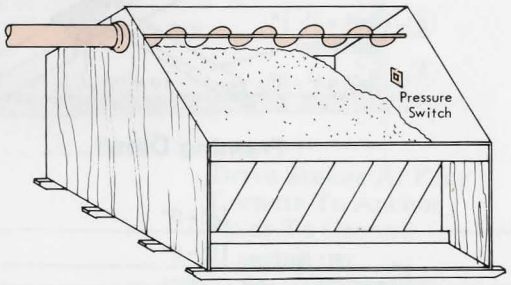


**Installation "A"**

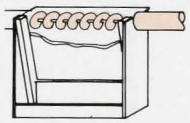

**Feeder**

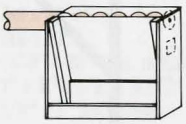

**Feeder**

# WALLOWS

Allow about 1 wallow per 8 market hogs. Move wallows frequently to avoid mudholes. Or, provide concrete platforms sloped to drain outside the lot. Fill wallows only 2" or 3" deep to minimize slopping.

## Wood

**CUTTING LIST**

| ITEM | NO. | DESCRIPTION |
|---|---|---|
| A | 10 | 2x12 x 6'-0" |
| B | 2 | 4x6 x 12'-0" |
| C | 2 | 2x12 x 10'-0" |
| D | 2 | 2x12 x 5'-9-1/4" |
| E | 1 | 2x4 x 5'-9-1/4" |
| F | 2 | 2x2 x 5'-8" |
| G | 4 | 2x2 x 4'-0" |
| H | 2 | 2x12 x 4'-0" |
| I | 2 | 2x4 x 24" |
| J | 1 | 2x4 x 4'-3-5/8" |
| K | 2 | 2x2 x 9'-2" |
| L | 2 | 2x2 x 5'-5" |
| M | 2 | 1/4" x 2" x 30" strap |
| N | 2 | 1/2" x 5" bolt |
| O | 2 | 1/2" x 6" bolt |
| P | 4 | 1/2" x 6'-3" rod |
| Q | 2 | 2x4 x 8'-6" |

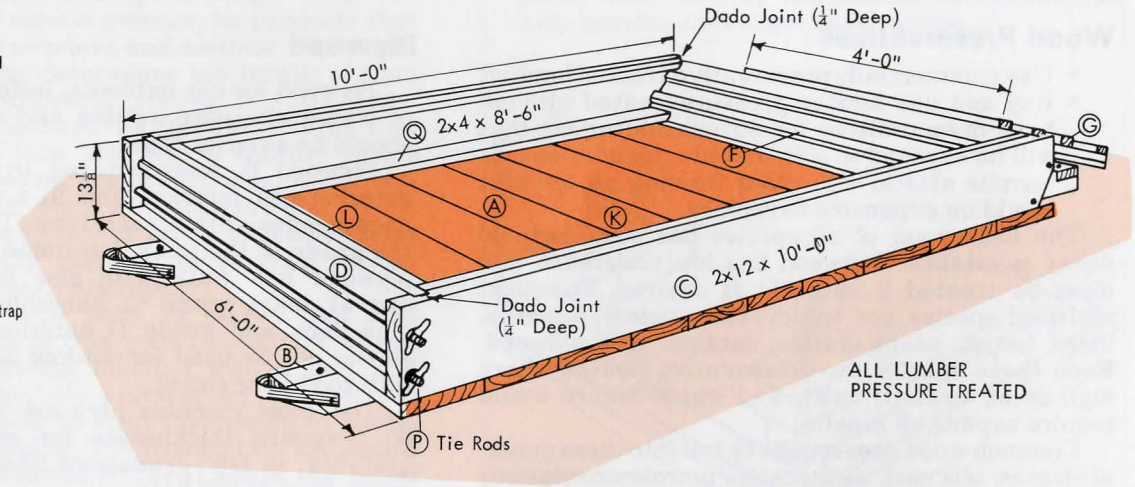


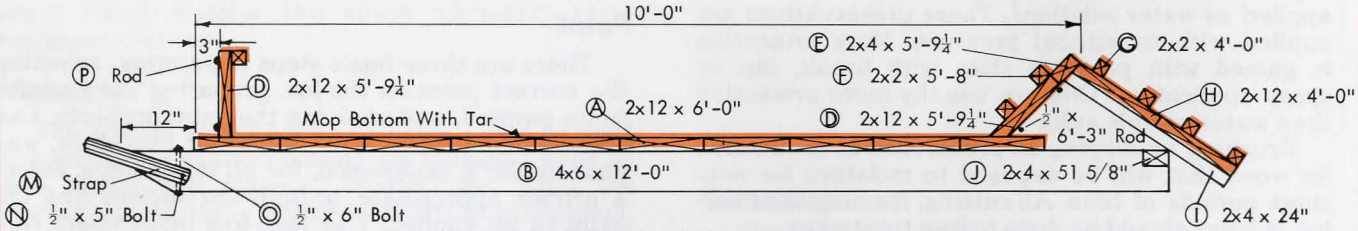


**Longitudinal Section**

## Steel

If Ramps Are Omitted Weld Pipe Across Ends

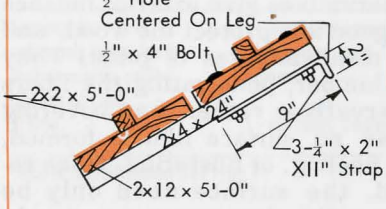


**Ramp Detail**

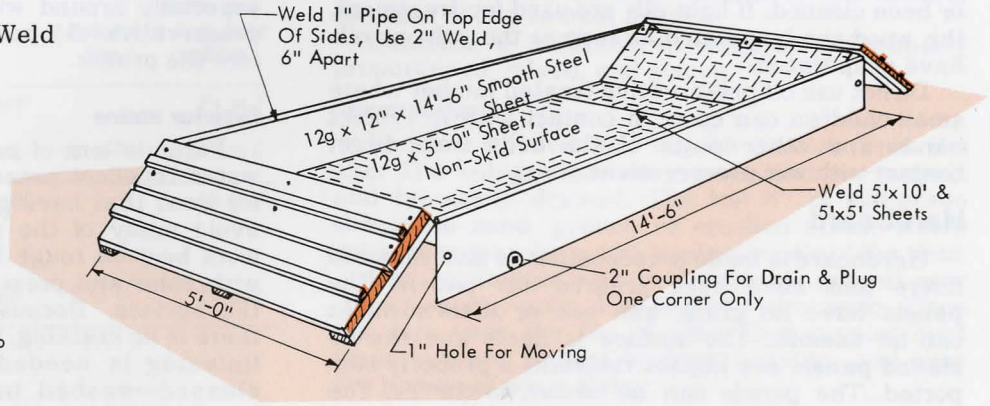

# MATERIALS

## Wood

Common boards are of nominal 1″ thick and structural lumber is nominally 2″ thick. Standard lengths are 4′-18′ in multiples of 2′. Longer lengths can be purchased, but usually at a premium.

Rough lumber is full dimension. It is usually more difficult to work with and finish than surfaced wood. Dimension lumber is planed on four sides and is, therefore, less than full dimension. See page___ for standard lumber sizes.

## Wood Preservatives

- Use commercially preservative-treated lumber.
- Buy and use lumber pressure-treated with oil-base preservatives for structural framing that will be exposed to soil, manure, foundations, or termite attack, and other framing pieces that would be expensive to replace.

The heartwood of all species has some natural decay resistance. Sapwood has low resistance and must be treated if long life is desired. The most resistant species are baldcypress, cedars, junipers, black locust, osage-orange, catalpa, and redwood. Even these species are preservative treated where high decay hazards exist, and where failure would require expensive repairs.

Common wood preservatives fall into three general classes: oils such as creosote, petroleum solutions of pentachlorophenol, and waterborne salts that are applied as water solutions. These preservatives are applied with or without pressure. More protection is gained with pressure than with brush, dip, or spray application. Oils are usually more protective than water-soluble salts.

Brushing or dipping oil preservatives is effective for wood that will be exposed to moisture for only short periods of time. All cutting, framing, and boring of holes should be done before treatment.

Brushing or dipping with oil- or water-soluble solutions is seldom worthwhile for wood that will be exposed to weather, soil, or water.

Wood treated with water-soluble preservatives can be painted after the wood has dried. Wood treated with oils like creosote and penta can stain through paint unless the treated wood has weathered or been cleaned. If light oils are used for treatment, the wood can be painted as soon as the solvent oils have evaporated.

Do not use oil-preservative treated lumber where small children can come in contact with it. Protect hands and other parts of the body from direct contact with wet preservatives.

## Hardboard

Hardboard is made of reconstituted natural wood fibers that have been pressed into panels. The panels have no grain, and one or both surfaces can be smooth. The surface is hard, and the installed panels are impact resistant if properly supported. The panels can be formed to curves. The panels are 4' wide and up to 16' long, and are 1/8", 3/16", 1/4", or 5/16" thick.

Hardboards may be tempered or standard. Tempered boards are stronger and have a higher moisture resistance than standard boards. Tempered boards are used for exterior and interior projects where moisture resistance is necessary. Standard boards are commonly used for interior walls and ceilings, and may be used for protected exterior surfaces. Follow manufacturers' application recommendations to avoid buckling due to moisture changes.

## Plywood

Plywood for use outdoors, inside animal shelters, or where alternate wetting and drying may occur, should be exterior type.

Plywood is manufactured in two basic types, exterior and interior, and in a variety of appearance grades within each type. The glue bond and the grade of the plies determine the type. Exterior plywood has waterproof glue lines and all plies are at least grade C. Sheathing has waterproof glue lines and grade D exterior plies. Sheathing should not be used for outdoor uses unless covered with roofing or siding.

The most common plywood panel size is 4′ x 8′. Standard thicknesses for sanded panels are 1/4″-3/4″ in 1/8″ gradations. Sheathing thicknesses range from 5/16″-3/4″.

## Paint

There are three basic steps to painting: selecting the correct paint for the job, preparing the surfaces to be painted, and applying the paint properly. Use the manufacturer's label and other literature, and your dealer's experience, for all three steps. Select a primer appropriate to both the surface and the paint to be applied. Use lead-free paint where children or animals can reach it.

Paint will not fill surface irregularities. Pores in concrete, brick, or stucco must be plastered before painting if a smooth surface is desired. On wood, clean the surface, seal knots and sap streaks, prime, putty nail holes and caulk cracks and seams; then apply finish coats. Wood life can be extended, especially around windows and doors, if a coat of preservative—5% penta in light oils—is applied before the primer.

### Exterior stains

Formulations of penetrating oil base stains with water repellent preservatives give exterior finishes for wood that have good life, protect the wood, and avoid many of the disadvantages of paint. They work best on rough lumber, penetrating the fibers with color and preservatives rather than covering the surface. Because no surface film is formed, there is no cracking, peeling, or blistering. When refinishing is needed, the surface need only be cleaned—washed in mild detergent, or simply brushed to remove dirt—before a new coat is sprayed or painted on.

The USDA Forest Products Laboratory (Madison, Wisconsin 53705) first developed a successful formula discussed in their bulletin FPL-046. Dark red and brown iron oxide pigments have given best life; pentachlorophenol ("penta") is a common preservative.

## Sheet Metal

Most steel products will rust. Rusting causes the metal to slowly deteriorate and lose its strength. Rusting can be delayed or prevented with paint, zinc coatings (galvanizing), or by adding certain ingredients when making the metal.

Zinc coating of steel is common for products that will be exposed to moisture and weather. The thickness of the coating determines the length of time the product will withstand rusting. A 1 1/4-ounce coating is the standard weight for roofing and siding. For extra long life, *Seal of Quality* sheets with a 2-ounce coating are used. Galvanized metal can also be painted, which will add more life.

Baked on colored finishes are available in metal siding. High quality material gives good service and makes an attractive building.

Attach sheets with nails or screws that seal the hole they make as they pass through the sheet. If you miss a framing member with a nail, pull the nail and fill the hole with a sheet metal screw. Use galvanized nails in steel (aluminum in aluminum) siding and roofing. The needed size and length of nail or screw depends on the shape of the metal sheet, the framing, and the strength the fastener must have. Follow the sheet manufacturers' recommendations.

## Masonry

The mortar mixes shown in Table___can be used in repairing and tuckpointing old masonry walls as well as for new masonry construction. After the mortar has partially stiffened, thoroughly compact.

Use mortar within 2 1/2 hours after original mixing when the air temperature is 80° or higher, and within 3 1/2 hours when the air temperature is below 80°. Discard mortar not used within these time limits.

**Recommended mortar mix proportions by volume**

| Type Service | Cement | Hydrated lime | Mortar sand in damp, loose condition |
|---|---|---|---|
| For ordinary service | 1–masonry cement* | | 2¼ to 3 |
| | or | | |
| | 1–portland cement | ½ to 1¼ | 4½ to 6 |
| Subject to extremely heavy loads violent winds, earthquakes or frost action | 1–masonry cement* plus 1–portland cement | | 4½ to 6 |
| | or | | |
| | 1–portland cement | 0 to ¼ | 2¼ to 3 |

*ASTM Specification C91 Type II.

1. Build corners first, 4 or 5 courses higher than center of wall.
2. After laying each corner course, check alignment for level and plumb.
3. Use a 1x2 board with markings 8" apart to locate top of masonry for each course.
4. Use a mason's line stretched from corner to corner to insure horizontal accuracy.
5. Bring block to proper grade and make plumb by tapping with a trowel handle.
6. Run a round "O" or "V" shaped tool along joints after mortar has somewhat stiffened to help provide watertight construction.

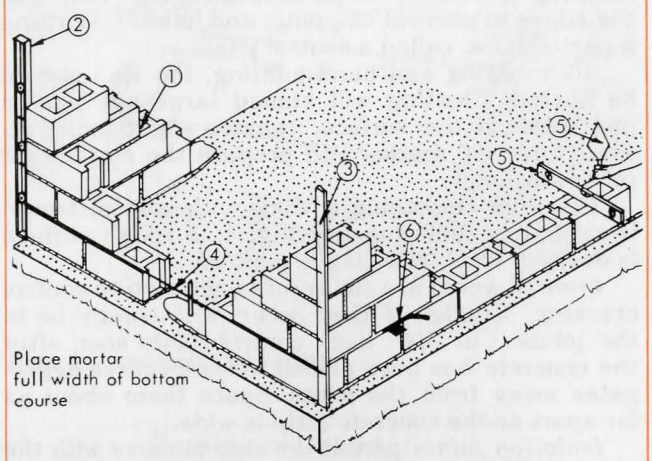


## Concrete

Concrete is a mixture of portland cement, water, and aggregates. Portland cement is sold in bulk, or in bags of one cubic foot (94 lb). The aggregates provide volume at low cost, composing 66% to 78% of the concrete.

The cement and water form a paste which hardens and glues the aggregates together. The quality of concrete is directly related to the binding qualities of this cement paste.

Concrete is a durable material only if properly proportioned, mixed, and placed.

### Construction

Remove all sod and organic matter from the site. The sub-grade must provide uniform support and be easily drained. The top 6" of sub-grade should be sand, gravel, or crushed stone, where subgrades may be water soaked much of the time.

Use reinforcing wire in pavements poured over soft or spongy soils. Use 6x6 #10 wire mesh. Place the wire near the top of slabs that support light loads but are subject to frost heaving, and near the bottom of other slabs.

Before the concrete is placed, the subgrade should be thoroughly dampened. Place the concrete where it will be used to help prevent the scaling and dusting that results from too much handling. Spade or vibrate along the forms to eliminate voids or honeycombs.

Spread the concrete as soon as possible after it is mixed. After it has been dumped and spread, strike it off to the proper grade, and then float to smooth and level the surface.

It is very important that placing, straight edging, and floating be completed before any bleeding occurs. (Bleeding refers to excess water in the concrete rising to the surface).

After all bleeding water has evaporated and the concrete has started to stiffen, start the other finishing operations. These include edging—rounding the edges to prevent chipping; and jointing—cutting a partial joint, called a control joint.

After edging and hand jointing, the slab should be floated. Floating will embed large aggregates just beneath the surface, remove slight imperfections and tool marks, and prepare the surface for other finishing.

The final smoothing is done with a steel trowel immediately following floating. If a rough surface is desired, steel troweling is omitted.

*Control joints* are cut across each slab to control cracking. Cracks, if they occur, will usually be in the joints. Cut 3/4″ deep control joints soon after the concrete has been placed to work coarse aggregates away from the joints. Space them about as far apart as the concrete strip is wide.

*Isolation joints* permit the slab to move with the earth. Place 3/4″ wide isolation joints along existing improvements such as buildings, concrete water tanks, or paved drives.

*Expansion joints* are constructed the same as isolation joints and should be installed in new walks and long drives.

**Curing**

Concrete does not dry—the paste sets by a chemical reaction between cement and water. Keep the surface of the concrete damp at least 5 days. Curing will continue for months. Remove forms after about 5 days for slabs, 10 days for walls, 28 days for structural elements.

**Floor Thickness**

4″: Feeding aprons and floors with minimum vehicle traffic. Building floors.
5″: Paved feedlots, building driveways.
6″: Heavy traffic drives (grain trucks and wagons).

**Outside concrete work in cold weather.**

Concrete cures very slowly at temperatures below 50°. Water frozen in uncured concrete will expand and cause damage to the concrete. Concrete should be cured a minimum of 48 hours before it is permitted to freeze, but it is best to prevent freezing for 4 to 5 days.

Do not place concrete over frozen ground. Use Type III portland cement, or Type I with calcium chloride dissolved in the mixing water at the rate of 2 lb/bag of cement.

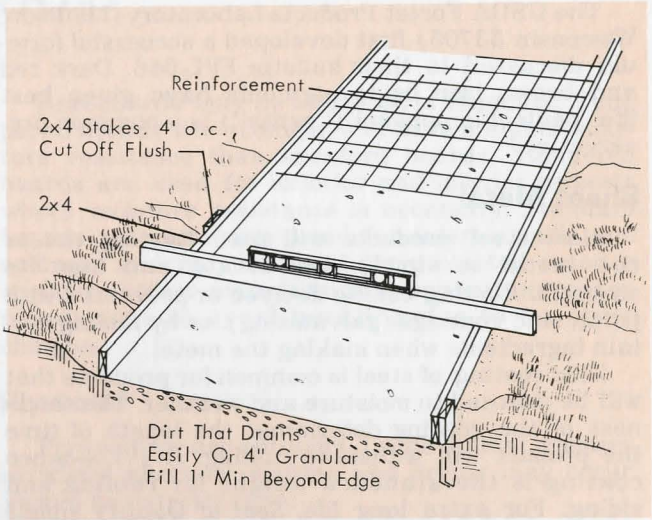


**Preparing subgrades and laying reinforcing if needed**

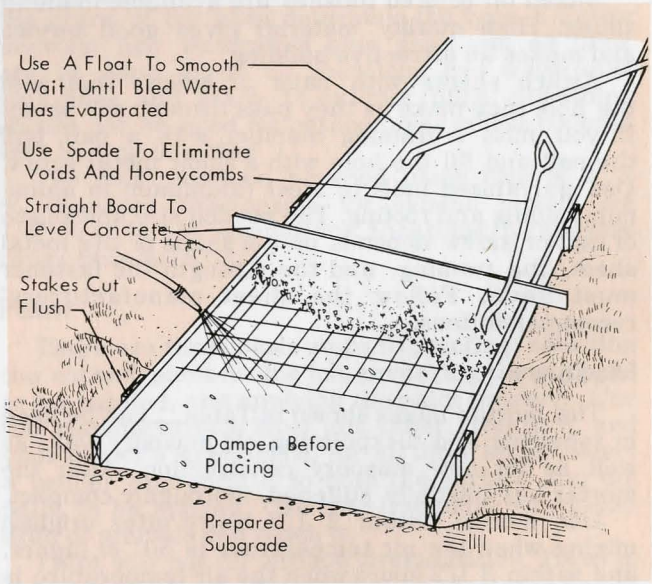


**Placing the concrete**

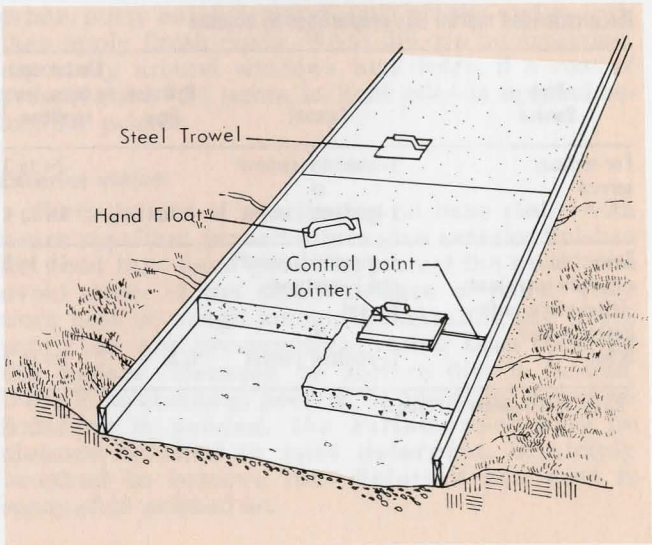


**Control joints usually spaced at intervals equal to width of slab, but not more than 20 feet apart**

When air temperatures are below 40°:

- Heat the sand, gravel, and water to just below 150°. Heat the sand and gravel in separate piles over old culvert pipe, a section of smokestack, or other improvised firebox. Place a fire inside.
- Stir and rake the materials frequently to assure even heating.
- Always remove snow and ice from forms before placing concrete.
- Place the concrete right after mixing when the concrete temperature should be 60°-80°.
- Protect the placed concrete with a cover to retain as much heat as possible. Canvas, straw, or hay are often used as covers. Protect for 4 or 5 days.
- Maintain concrete temperature at 70° for 3 days, or 50° for 5 days. Do not allow it to freeze during the next 4 days. Use a vented heater indoors.
- Remove forms only after sufficient curing. Pour hot water on the concrete. If properly cured, there will be no effect, but if frozen, the concrete will soften.

**Outside concrete work in hot weather**

As the temperature rises above 70°, the curing rate increases. Evaporation of water from the concrete also increases. A combination of wind, high temperature, and low humidity will dry concrete too rapidly and weaken it. Keep the fresh concrete damp for at least 5 days, and place a sheet of 4 mil plastic over the dampened concrete to help retard evaporation.

In extremely hot weather it may be necessary to reduce the temperature of the freshly mixed concrete. Aggregates should be stockpiled in the shade, if possible, and cool water used to mix the concrete. Curing must be started promptly to retard the evaporation of water.

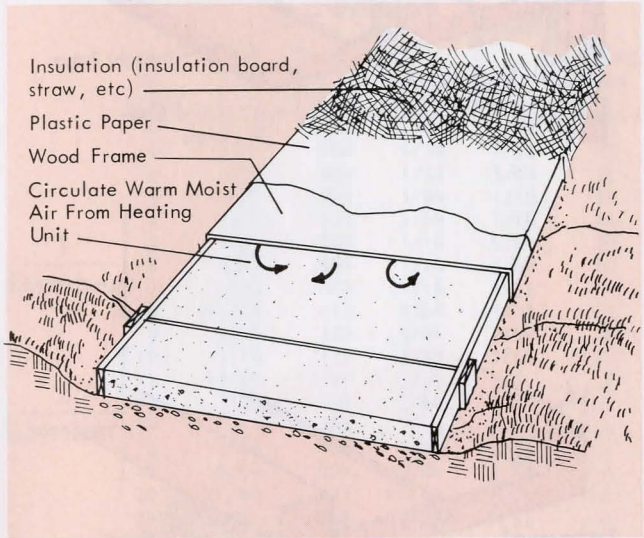


**Protecting concrete in cold weather**

**Concrete mixes**

| | Max. size aggregate | [1]Gallons of water for each sack of cement, using: Damp[3] Sand | Wet[4] (average) Sand | Very[5] Wet Sand | [2]Suggested mixture for 1-sack trial batches: Cement, [6] sacks (cu ft) | Aggregates[7]: Fine, cu ft | Coarse cu ft | READY-MIX Sacks Cement Per Yard[8] |
|---|---|---|---|---|---|---|---|---|
| 5-Gallon Mix; use for concrete subjected to severe wear, weather, or weak acid and alkali solutions. | ¾″ | 4½ | 4 | 3½ | 1 | 2 | 2¼ | 7¾ |
| 6-Gallon Mix; use for floors (home, barn), driveways, walks, septic tanks, storage tanks, structural concrete. | 1″ | 5½ | 5 | 4½ | 1 | 2¼ | 3 | 6¼ |
| | 1½″ | 5½ | 5 | 4½ | 1 | 2½ | 3½ | 6 |
| 7-Gallon Mix; use for foundation walls, footings, mass concrete, etc. | 1½″ | 6¼ | 5½ | 4¾ | 1 | 3 | 4 | 5 |

[1]Increasing the proportion of water to cement reduces the strength and durability of concrete. Adjust the proportions of trial batches without changing the water-cement ratio. Reduce gravel to improve smoothness; reduce both sand and gravel to reduce stiffness.

[2]Proportions will vary slightly depending on gradation of aggregates.

[3]Damp sand will fall apart after being squeezed in the palm of the hand.

[4]Wet sand will ball in the hand when squeezed, but leaves no moisture on the palm.

[5]Very wet sand has been recently rained on or pumped.

[6]Use air-entrained portland cement in concrete for outdoor use. It virtually eliminates scaling due to freezing, thawing, and salt action. It is more workable and cohesive, reduces segregation and bleeding, and has improved sulfate resistance. Since it is more workable, it requires less mixing water—an added benefit.

| Maximum Aggregate Size | Amount of Air |
|---|---|
| 1½″ - 2½″ | 4%-6% |
| 1″ | 6% |
| 3/4″ | 7% |
| 1/2″ | 8% |
| 3/8″ or less | 9% |

[7]Aggregates must be clean and free of dirt, clay, coal, organic matter, etc. They must be durable, hard, and have few long slivers.
Fine aggregate, usually sand, should have particles up to ¼″ in size. Coarse aggregates, commonly gravel or crushed rock, are pieces above ¼″.

[8]Medium consistency (3″ slump). Order air-entrained concrete for outdoor use.

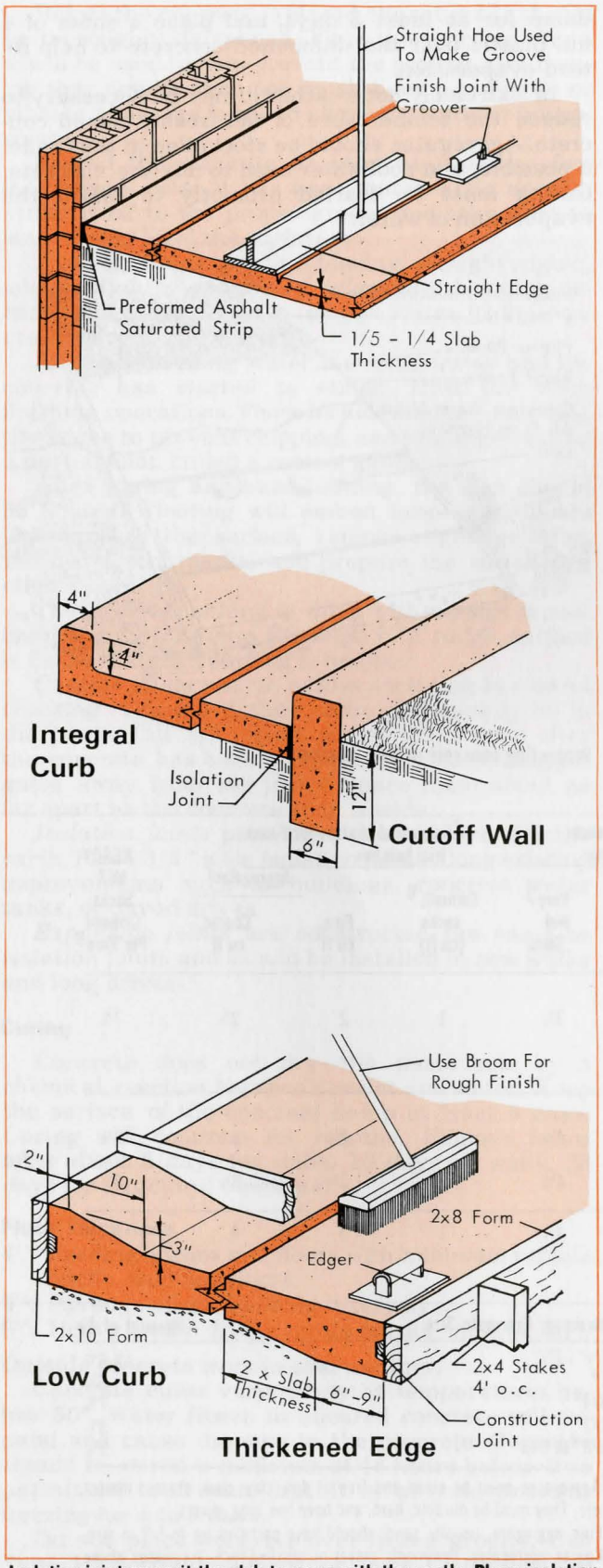


**Isolation joints permit the slab to move with the earth. Place isolation joints along existing improvements such as buildings or paved drives**

# FASTENERS

## Nails

Nails that have special coatings, such as zinc, are intended primarily for use where corrosion and staining may occur. Cement coated nails will increase the strength of a joint for a short time, but the joint strength will drop to the strength of a plain-nail joint in a few months.

In general, annular-grooved and spiral-grooved nails will give stronger joints than plain nails. The strength of the nail is greatest when it is driven perpendicular to the grain in the wood.

Nails will be strongest when driven into lead holes that are slightly smaller than the nail. Lead holes also prevent or reduce splitting of the wood and are used mainly in hardwoods.

### Spacing

Space nails about 6" apart for most work. Nails with glue produce a strong, durable joint. The nails secure the joint until the glue cures.

Predrilling lead holes may be necessary for nails placed near edges of boards. The drill bit should be slightly smaller than the nail.

**Selection of nails for use with different materials**

| | NAIL TO USE [1] |
|---|---|
| 1" stock | 8d |
| 2" stock | 16d to 20d |
| 3" stock | 40d to 60d |
| Concrete forms | common or double headed nails |
| Toenailing studs | 10d |
| Sheathing; roof, wall, and floor | 8d |
| Roofing | |
| Aluminum | 1¾" to 2½" aluminum nail with rubber washers. |
| Asphalt shingles | Large head roofing nail |
| Wood shingles | 3d to 4d |
| Nailing steel sheet metal (roofing and siding) | Self-tapping screws, helical drive screws with lead washers. |
| Nailing to concrete | Concrete or cement nails or helical drive nails or drive bolts. |
| Plywood [2] | |
| 3/4" plywood | 6d casing or 6d finishing |
| 5/8" plywood | 6d or 8d finishing nails |
| 1/2" plywood | 4d or 6d |
| 3/8" plywood | 3d or 4d |
| 1/4" plywood | 3/4" or 1" brads; 3d nails |

[1] Recommendation: Use galvanized hardened threaded nails for most wood outdoor projects. Use aluminum nails with aluminum sheets.

[2] The nailing strength of plywood is about the same as solid wood, but the greater resistance to splitting when nailed near the edge is a definite advantage.

**Nails commonly used and their approximate strength in pounds**

| SIZE | LENGTH INCHES | WIRE GAGE | APPROX. NO./LB. | APPROX. STRENGTH POUNDS PULL (1) | LATERAL (2) |
|---|---|---|---|---|---|
| COMMON NAILS | | | | | |
| 2d | 1 | 15 | 847 | Douglas Fir, Larch | |
| 3d | 1 1/4 | 14 | 543 | or Southern Pine | |
| 4d | 1 1/2 | 12 1/2 | 294 | | |
| 5d | 1 3/4 | 12 1/2 | 254 | | |
| 6d | 2 | 11 1/2 | 167 | 29 | 63 |
| 7d | 2 1/4 | 11 1/2 | 150 | | |
| 8d | 2 1/2 | 10 1/4 | 101 | 34 | 78 |
| 9d | 2 3/4 | 10 1/4 | 92 | | |
| 10d | 3 | 9 | 69 | 38 | 94 |
| 12d | 3 1/4 | 9 | 63 | 38 | 94 |
| 16d | 3 1/2 | 8 | 49 | 42 | 107 |
| 20d | 4 | 6 | 31 | 49 | 139 |
| 30d | 4 1/2 | 5 | 24 | 53 | 154 |
| 40d | 5 | 4 | 18 | 58 | 176 |
| 50d | 5 1/2 | 3 | 14 | 63 | 202 |
| 60d | 6 | 2 | 11 | 68 | 223 |
| SPIKES | | | | | |
| 10d | 3 | 6 | 32 | 49 | 139 |
| 12d | 3 1/4 | 6 | 31 | 49 | 139 |
| 16d | 3 1/2 | 5 | 24 | 53 | 155 |
| 20d | 4 | 4 | 19 | 58 | 176 |
| 30d | 4 1/2 | 3 | 14 | 63 | 202 |
| 40d | 5 | 2 | 12 | 68 | 223 |
| 50d | 5 1/2 | 1 | 10 | 73 | 248 |
| 60d | 6 | 1 | 9 | 73 | 248 |
| 5/16 | 7 | 5/16" | 6 | 80 | 289 |
| 3/8 | 8-12 | 3/8" | 5-3 | 96 | 380 |
| HARDENED THREADED NAILS | | | | | |
| 6d | 2 | 12 | 190 | 80 | 69 |
| 8d | 2 1/2 | 11 | 117 | 90 | 82 |
| 10d | 3 | 10 | 78 | 100 | 94 |
| 12d | 3 1/4 | 10 | 73 | 100 | 94 |
| 16d | 3 1/2 | 9 | 57 | 110 | 107 |
| 20d | 4 | 7 | 36 | 135 | 139 |
| 30d | 4 1/2 | 7 | 31 | 135 | 139 |
| 40d | 5 | 7 | 27 | 135 | 139 |
| 50d | 5 1/2 | 7 | 23 | 135 | 139 |
| 60d | 6 | 7 | 18 | 135 | 139 |

(1) Per inch penetration of point
(2) For penetration of 11 diameters

## Wood Screws

Lubricating the surface of a screw with soap is recommended to facilitate insertion, especially in dense woods.

Screws should always be turned in. They should never be started or driven with a hammer as this will tear the wood fibers and injure the screw threads, seriously reducing the load carrying capacity of the screw.

### Which screw to use

For maximum strength, screw threads should penetrate seven shank diameters, or about seven times the recommended shank lead hole.

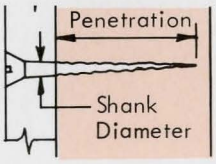


**Screw dimensions**

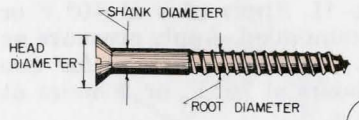


Flat

Phillips

Round

Oval

| | NO. OF SCREW | SHANK HOLE SIZE | THREADS ROOT DIAM. | lead hole SOFT | HARD | THREADS PER INCH |
|---|---|---|---|---|---|---|
| | 0 | 1/16 | .040 | 1/64 | 1/32 | 32 |
| | 1 | 5/64 | .046 | 1/32 | 1/32 | 28 |
| | 2 | 3/32 | .054 | 1/32 | 3/64 | 26 |
| | 3 | 7/64 | .065 | 3/64 | 1/16 | 24 |
| 1" Lumber | 4 | 7/64 | .075 | 3/64 | 1/16 | 22 |
| | 5 | 1/8 | .085 | 1/16 | 5/64 | 20 |
| | 6 | 9/64 | .094 | 1/16 | 5/64 | 18 |
| | 7 | 5/32 | .102 | 1/16 | 3/32 | 16 |
| | 8 | 11/64 | .112 | 5/64 | 3/32 | 15 |
| | 9 | 3/16 | .122 | 5/64 | 7/64 | 14 |
| 2" Lumber | 10 | 3/16 | .130 | 3/32 | 7/64 | 13 |
| | 11 | 13/64 | .139 | 3/32 | 1/8 | 12 |
| | 12 | 7/32 | .148 | 7/64 | 1/8 | 11 |
| | 14 | 1/4 | .165 | 7/64 | 9/64 | 10 |
| | 16 | 17/64 | .184 | 9/64 | 5/32 | 9 |
| | 18 | 19/64 | .204 | 9/64 | 3/16 | 8 |
| | 20 | 21/64 | .223 | 11/64 | 13/64 | 8 |
| | 24 | 3/8 | .260 | 3/16 | 7/32 | 7 |

## Glue

Gluing two pieces of wood is similar to welding two pieces of steel. The joint itself is stronger than the wood. If something breaks, it will usually be the wood, not the glue.

The wood to be glued should be dry, smooth, and free of dirt, oil, and other coatings. Most purchased lumber has been surfaced on a planer and is usually sufficiently smooth.

Generally, preservative-treated wood must be planed prior to gluing to obtain maximum holding power. Wood treated with oil-base preservatives tends to bleed. Buy wood that has been steamed or otherwise cleaned until bleeding has stopped.

### Selecting a Glue

Pick the glue for the particular job and learn how to use it. Improper use of glues and glued products may result in costly repairs or replacements.

Pick the glue for the particular job and Learn how to use it. Improper use of glues and glued products may result in costly repairs or replacements.

Two glues are recommended for outdoor equipment: Casein and Resorcinol Resin.

- Resorcinol Resin can be used for both wet or dry conditions. Apply glue at 70 degrees or above. Assemble but wait five to ten minutes before applying pressure. Maintain pressure for 10 to 16 hours.

- Casein may be used for dry conditions only. Buy a glue that meets Federal Specification MMM-A-125 Type II. Apply glue at 40° F or above; 70° F recommended. Apply pressure as soon as possible. Maintain pressure for two days at 40° F, 4 hours at 70° F, or 2 hours at 80° F.

### Applying Glue

Before applying glue, be sure of a good fit by testing the joint; both pieces should make contact at all points. Apply glue with a brush or paint roller. Put pressure on the joint with clamps, nails, screws, or other fasteners before wiping off excess glue.

Enough glue must be applied to the joint. When pressure is applied, some glue should ooze out from around the joint. If it doesn't, you aren't using enough glue. Never skimp on the use of glue; the cost of the glue is a minor item in the total cost of construction.

Pressure is usually applied with nails or staples. The commonly used nails are box, galvanized, or cement coated. The nails are not removed after the glue has cured. If staples are used, finish driving the staple with at least one hammer blow. At the end of the pressing time, the glued elements may be moved but should not be used for about one week.

Joints connecting structural framing are as important as the framing itself. A pressure of one or more nails every eight square inches of the joint is usually required. The best location and size of pressure nails are usually given in a designed plan or in the engineer's recommendations.

**Properties of different glues**

| PROPERTY | SYNTHETIC RESIN GLUES | | | | | PROTEIN GLUES | |
|---|---|---|---|---|---|---|---|
| | Resorcinol | Urea | Polyvinyl | Epoxy | Contact Adhesives | Casein | Animal |
| Needs Mixing | X | X | | X | | X | X |
| Crack-Filling | | | X | X | X | X | |
| Applied Hot | | | | | | | X |
| Applied Cold | X | X | X | X | X | X | |
| Colorless Glue Line | | X | X | | X | X | X |
| Dark Colored Glue Line | X | | | | | | |
| Tends to Stain Certain Woods | | | | | | X | |
| Pressed at 70° | X | X | X | X | X | X | X |
| Over 8-Hour Working Life | | X | X | | | | X |
| Low Moisture Resistance | | | X | | | | X |
| Medium Moisture Resistance | | | X | | X | X | |
| Good to High Moisture Resistance | X | X | | X | | | |
| Low Temperature Resistance | | X | X | | | | |
| High Temperature Resistance | X | | | X | X | X | X |
| For Structural Gluing | X | | | | | X | |
| For Exterior Uses1 | X | | | 3 | | | |
| For Interior Uses2 | | X | X | 3 | 4 | X | X |

1Exterior uses include outdoor furniture, boats, and recreational equipment.

2Interior uses include furniture, cabinets, framing, and other shop-work that will be used in a moderately dry atmosphere.

3Excellent for bonding metal, plastics, and cloth to wood. No practical advantage on wood-to-wood gluing over resorcinal resin except it is a good joint filler.

4Covering counters and cabinets with leather, linoleum, and plastic laminates.

## CONVERSIONS

Multiply to the right. (Cu. Ft. x 7.5 = Gal.)
Divide to the left. (Gal. ÷ 7.5 = Cu. Ft.)

| | | |
|---|---|---|
| CUBIC FEET | 7.5 | Gallons |
| | 0.4 | Bu. Ear Corn |
| | 0.8 | Bu. Grain |
| | 1728 | Cubic Inches |
| GALLONS | 231 | Cubic Inches |
| | 0.133 | Cubic Feet |
| | 8.3 | Pounds Water |
| BUSHELS | 1.25 | Cubic Feet |
| | 2.5 | Cu. Ft. Ear Corn |
| CUBIC YARDS | 27 | Cubic Feet |
| concrete | 81 | Sq. Ft. 4" Floor |
| concrete | 54 | Sq. Ft. 6" Floor |
| ACRES | 43,560 | Square Feet |
| | 4,840 | Square Yards |
| | 160 | Square Rods |
| | 1/640 | Square Mile |
| MILES | 5,280 | Feet |
| | 1,760 | Yards |
| | 320 | Rods |
| RODS | 16.5 | Feet |
| | 5.5 | Yards |

## LUMBER

Board Foot = 1" x 1' x 1' nominal dimensions.
Board Feet = thickness in inches x width in feet
(4" = 1/3') x length in feet.

i.e. : 1 x 4 x 10' = 1 x 1/3 x 10 = 3 1/3 fbm
2 x 6 x 12' = 2 x 1/2 x 12 = 12 fbm

Actual Dimensions: (Dressed 4 sides - S4S)

| | thick | | wide | | | | | |
|---|---|---|---|---|---|---|---|---|
| Nominal | 1" | 2" | 3" | 4" | 6" | 8" | 10" | 12" |
| Actual | ¾ | 1½ | 2½ | 3½ | 5½ | 7¼ | 9¼ | 11¼ |

## AREAS & VOLUMES

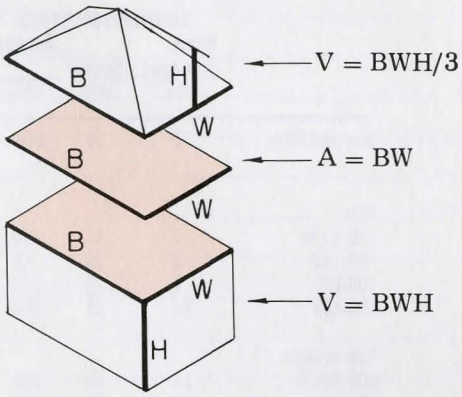


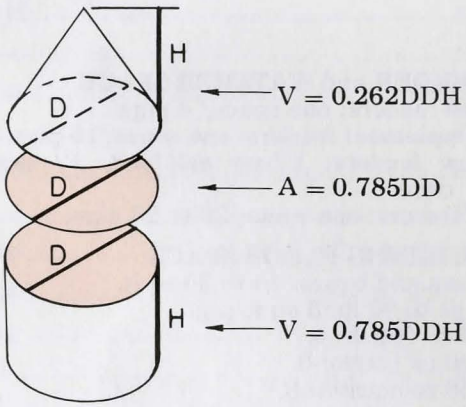


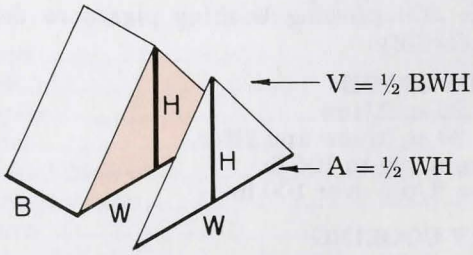

# SUMMARY OF DESIGN DATA

| | VENTILATION RATES | | | TEMPERATURE | SUPPLEMENTAL HEAT, Btu/hr | | | | WASTE PRODUCTION | | | |
|---|---|---|---|---|---|---|---|---|---|---|---|---|
| | Winter | | Summer | Winter Room | Slotted Floors | | Bedded or Scraped Floors | | Liquids + Solids | | Wet Solids Only | |
| | Minimum | Normal | | | | | | | | | | |
| | cfm | cfm | cfm | °F | Cold | Mild | Cold | Mild | cu ft | gal | cu ft | lb |
| Sow and litter | 20 | 20 | 210 | 60° | | | 2000* | 1400* | 0.55 | 4 | 0.5 | 30 |
| | | | | 80° | 1500 | 1000 | | | | | | |
| Pigs | | | | | | | | | | | | |
| 20-40 lb | 2 | 15 | 36 | 70° | 275* | 125* | 300* | 150* | 0.06 | 0.5 | 0.04 | 2.4 |
| 40-100 | 5 | 20 | 48 | 60° ± 15° | 250 | 100 | 500 | 200 | 0.13 | 1.0 | 0.10 | 5.9 |
| 100-150 | 7 | 25 | 72 | 60° ± 15° | 250 | 100 | 500 | 200 | 0.21 | 1.7 | 0.15 | 8.8 |
| 150-210 | 10 | 35 | 100 | 60° ± 15° | 250 | 100 | 500 | 200 | 0.30 | 2.2 | 0.20 | 12.0 |
| Sow or boar | | | | | | | | | | | | |
| 200-250 lb | 10 | 35 | 120 | 60° ± 15° | 250 | 100 | 500 | 200 | 0.37 | 2.6 | 0.25 | 14.8 |
| 250-300 | 12 | 40 | 180 | 60° ± 15° | 250 | 100 | 500 | 200 | 0.43 | 3.0 | 0.30 | 17.5 |
| 300-500 | 15 | 45 | 250 | 60° ± 15° | 250 | 100 | 500 | 200 | 0.71 | 5.0 | 0.50 | 30.0 |

*Provide brooder heat for pigs.

**FEEDER and WATERER SPACE**
Self-feeders: one space/ 4 pigs.
Supplement feeders: one space/15 pigs.
Sow feeders: 1'/sow self-feed, 2'/sows all fed at once.
Waterers: one space/20 to 25 pigs.

**BUILDING FLOOR SPACE**
Sows and boars: 15 to 20 sq ft.
Pigs to 40 lb: 3 sq ft/pig.
40 to 100 lb: 4.
100 to 150 lb: 6.
150 to market: 8.
100 to market: 6 sq ft under roof, + 6 sq ft on outside paved lot.

**PASTURE SPACE**
10 gestating sows/acre.
7 sows with litters/acre.
50 to 100 growing-finishing pigs/acre depending on fertility.

**SHADE SPACE**
15 to 20 sq ft/sow.
20 to 30 sq ft/sow and litter.
4 sq ft/pig to 100 lb.
6 sq ft/pig over 100 lb.

**SPRAY COOLING**
Water = 0.09 gal/hr/pig.
Nozzle size = 0.045 gal/min/pig.

**Ventilation AIR INTAKE**
Size in sq in = 1/4(cfm fan capacity).

**FLOOR and LOT SLOPES**
Slotted floors: usually flat:
Farrowing, solid floors:
1/2" to 3/4"/ft without bedding.
1/4" to 1/2"/ft with bedding.
Finishing: 1/2" to 1"/ft.
Paved lots: 1/4" to 1"/ft.
Paved feeding floors:
Indoors: 1/4"/ft minimum.
Outdoors: 1"/ft.
Building alleys:
1/2"/ft cross slope for crown.
1/10" to 1/4"/ft to drain.
Gutters and pits:
1"/25' to 1"/100' to drains.

**FLOOR THICKNESS**
4": Feed aprons and floors with minimum vehicle traffic; building floors.
5": Paved feedlots; building drives.
6": Heavy traffic drives.

**SLOT WIDTHS** in slotted floors
New-born pigs[1]: 3/8" and 3/4"-1".
25 to 40 lb[2]: 1/2" to 1".
40 to market: 3/4" to 1".
Sows and Boars: 1"-1-1/4".

[1]Cover slots during farrowing; wide slots behind sows, 3/8" elsewhere.
[2]3" width preferred over wider slats.

# INDEX


Air Inlets....21
Air Outlets....21
Alleys.... 8
Auger Installations....74
Breeding Rack....52
Brooder Lamps....28
Building Selection....6-18
Cart....70
Cold Buildings....31
Concrete....77-80
Cooling....31
Crates....55-57
Creeps....49
Fans....20, 21, 24, 26-28
Farrowing....6-11
  Crates....55
  Stalls....53-54
Fasteners....80-82
Feeding....62-70
  Barrel....68
  Creep....69
  Fenceline....68
  Finishing....64-67
  Mineral....69
  Stalls....62, 63
  Trough....70
Fencing....43-48
  Stock Guards....48
  Tilt-up Concrete....44
  Windbreak....45, 46
Finishing....13-15
Floors.... 7
Fork Lift....57
Free Stalls.... 7
Gates....47
Gestating Sow Housing....16-18
Glue....81
Growing....12, 13
Gutters....35, 40-43
Handling Equipment....49-61
Hardboard....76
Heat....6, 28-31
  Electric....30
  Hot Air....29
  Hot Water....30
  Underfloor Cable....29
Hinges....47
Holding Pond....40
Inlets....21-23, 24, 32
Insulation....19, 20
Lagoons....37, 38
Lamps....28
Latches....47
Layouts
  Farrowing....8-11
  Finishing....13-15
  Gestating Sow Housing....16-18
  Growing....12, 13
Loading Chutes....58-60
Materials....76-80
Metal....77
Nails....80
Outlets....21, 23
Paint....76
Pasture Production....18
Pens....6, 7, 54
Pits....35, 42
Plywood....76
Production Alternatives.... 3
Ringing Crate....56
Runoff Control....38
Screws....81
Settling Basin....34, 39
Shades....18
Shipping Crate....56
Slot Inlets....22
Slotted Floors....7, 36, 40, 41
Sorting Chutes....49, 50, 51
Spray Cooling....31
Stalls....6, 7, 53, 54
Stock Guards....48
Storage Tanks....41
Sun Shades....72, 73
Trailer....61
Trough....70
Ventilation....19-32
  Control....26
  Emergency....27
  Exhaust....24
  Individual Blower....24, 25
  Manure Storages....34
  Pressure....24
Vapor Barrier....20
Wallows....75
Wash.... 8
Waste Disposal....33-42
  Gases....34
  Liquid....33
  Solid....33
  Storage....35
Waterer....71
Weighing Crate....57
Weights and Measures....83
Wiring Systems....26