University of Nebraska - Lincoln
DigitalCommons@University of Nebraska - Lincoln

Historical Materials from University of Nebraska-Lincoln Extension

Extension

1974

EC74-2033 Structural Lighting in the Home

Mary Dale Christensen

Follow this and additional works at: http://digitalcommons.unl.edu/extensionhist

Christensen, Mary Dale, "EC74-2033 Structural Lighting in the Home" (1974). *Historical Materials from University of Nebraska-Lincoln Extension*. 4276.
http://digitalcommons.unl.edu/extensionhist/4276

This Article is brought to you for free and open access by the Extension at DigitalCommons@University of Nebraska - Lincoln. It has been accepted for inclusion in Historical Materials from University of Nebraska-Lincoln Extension by an authorized administrator of DigitalCommons@University of Nebraska - Lincoln.

AGRI
8
85
E7
#74-2033
OCT 15 1974

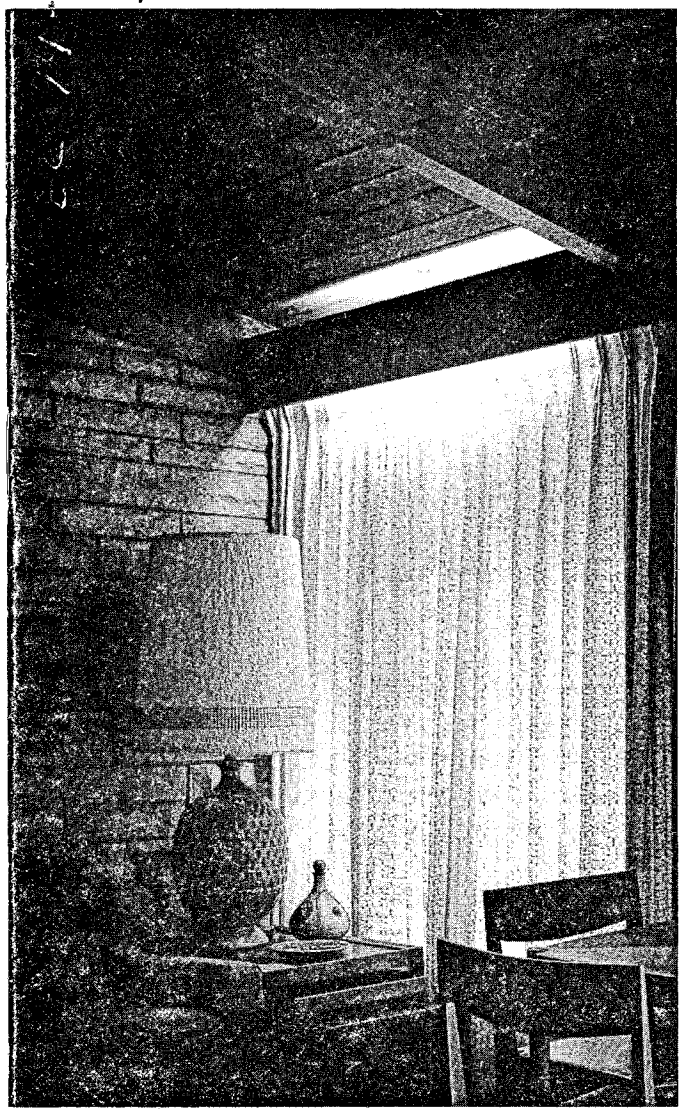

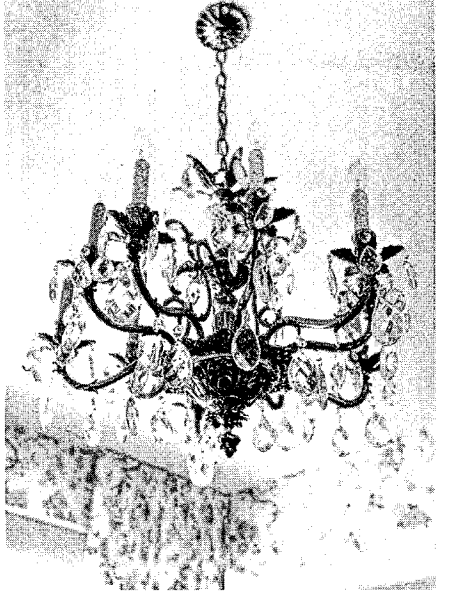

EC 74-2033

STRUCTURAL LIGHTING

in the Home

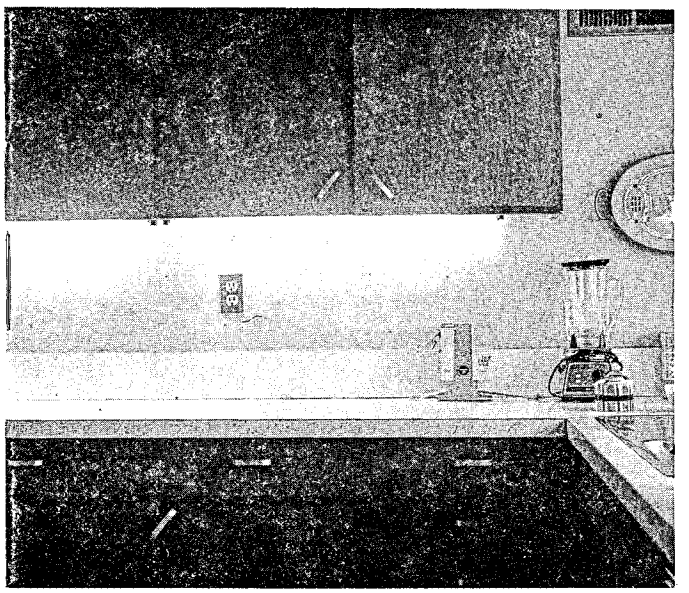

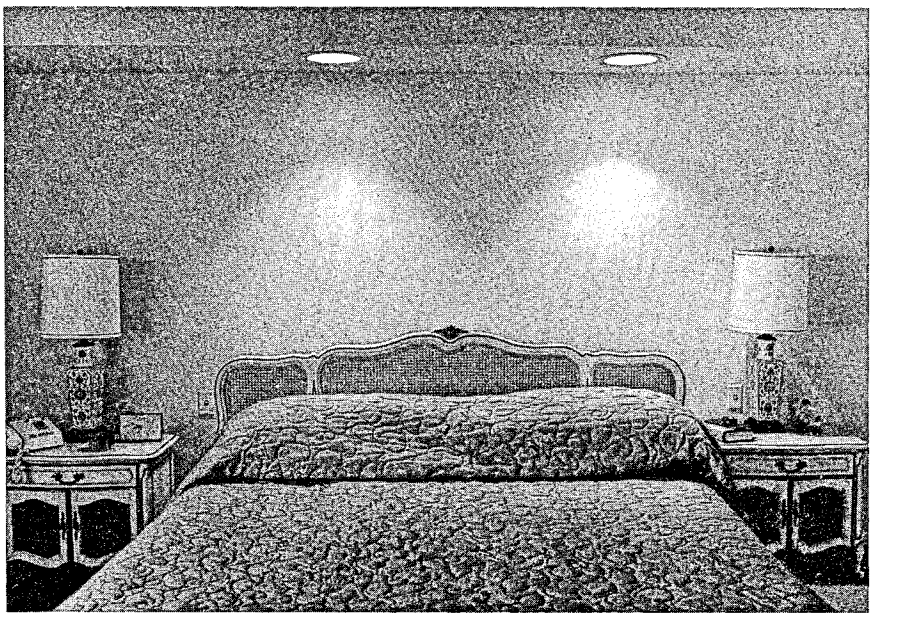

Extension Service
University of Nebraska-Lincoln College of Agriculture Cooperating with the
U.S. Department of Agriculture and the College of Home Economics
J. L. Adams, Director

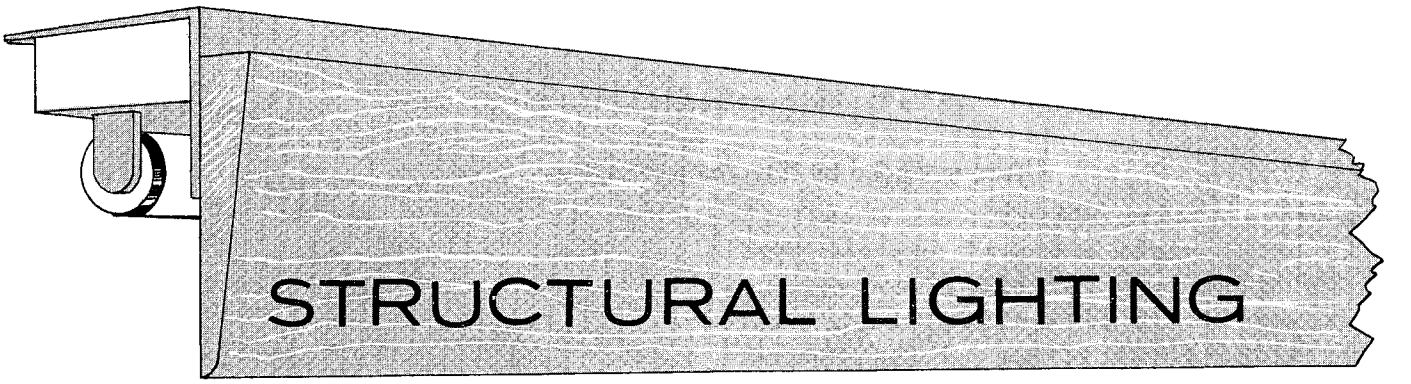

STRUCTURAL LIGHTING in the home

Mary Dale Christensen
Extension Specialist (Housing)

Good lighting can be a miracle worker in your home. With light you can transform a drab, uninteresting room into a cheerful, exciting area. A hazardous area can become a safe work area. A gloomy basement can turn into an attractive activity room. Good lighting—properly planned—not only makes a home comfortable and easy to live in, but enhances furnishings, textures, and colors as well.

Good lighting doesn't just happen, it must be planned. In designing a new home or remodeling an older one, lighting methods should be an integral part of the plan. Lighting planned at the first stage can be interesting for both sight and design.

If remodeling or building is not in your future, there is still much you can do to improve the lighting in your existing home. Many improvements can be made without a lot of expense once you understand and apply the principles of good lighting.

There are two kinds of lighting in the home. *Structural lighting* refers to attached fixtures and "built-in" lighting. *Portable lighting* is supplied by movable lamps on tables, dressers, floors, etc. This circular will be concerned primarily with structural lighting.

To achieve well designed lighting, consider *amount* and *quality.*

ENOUGH LIGHT

It is sometines difficult to determine just what is the right amount of light for an area. Most of us are used to "making do" with far too little light for our own health, safety and enjoyment. As a help, the lighting authorities of the Illuminating Engineering Society have determined the minimum amounts of light needed to do certain tasks and the amount needed for general lighting in an area. These levels of illumination are measured in terms of "foot-candles." A light meter will show you how many foot candles are in the area.

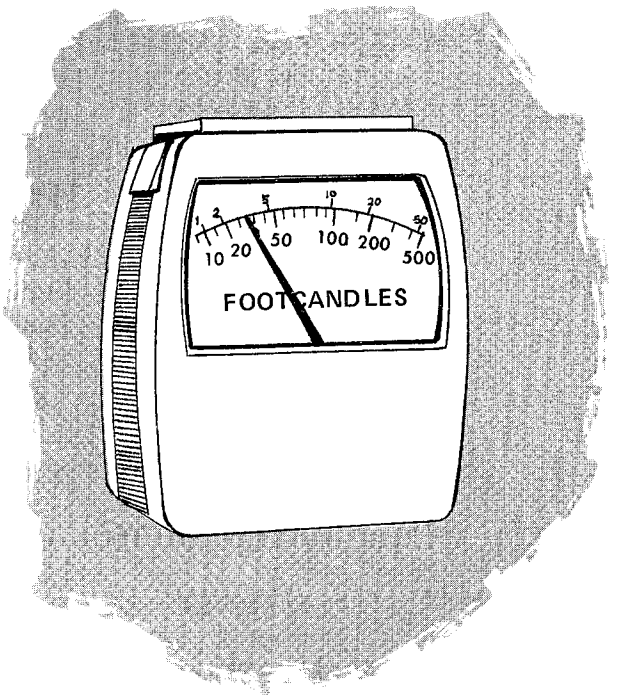

Table 1. Minimum Levels of Illumination

(Recommended by Illuminating Engineering Society)

Specific Visual Task	Amount of light on task (foot-candles)
Reading and writing:	
Handwriting, indistinct print, or poor copies	70
Books, magazines, newspapers	30
Music scores, advanced	70
Music scores, simple	30
Studying at desk	70
Recreation:	
Playing cards, table games, billiards	30
Table tennis	20
Grooming:	
Shaving, combing hair, applying make-up	50
Kitchen work:	
At sink	70
At range and work counter	50
Dining	15
Laundering jobs	50
Sewing:	
Dark fabrics (fine detail, low contrast)	200
Prolonged periods (light-to-medium fabrics)	100
Occasional (light-colored fabrics)	50
Occasional (coarse thread, large stitches, high contrast contrast of thread to fabric)	30
Handicraft:	
Close work (reading diagrams and blue-prints, fine finishing)	100
Cabinet-making, planing, sanding	50
Glueing, measuring, sawing	50

General Lighting	Average light throughout area (foot-candles)
Any area involving a visual task	30
Areas used mostly for relaxation, reacreation, and conversation	10
For safety in passage areas	10

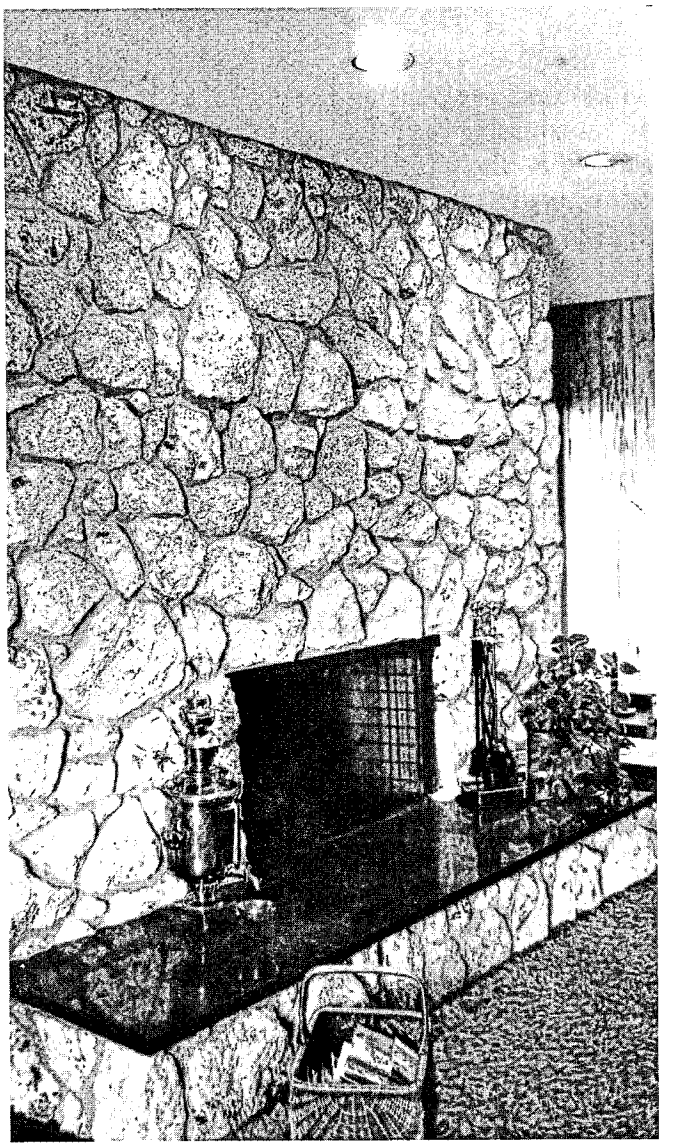

The *mood or atmosphere* desired in a room also helps determine the level of lighting needed. Light has a definite psychological effect. A high level of illumination creates an active, cheerful mood and is recommended for activity rooms, game rooms, kitchens, and other active areas. A low, soft level of lighting creates moods of rest and relaxation for conversations and non-reading activities. Living rooms, dining rooms and bedrooms are areas where low levels of lighting are often wanted. A flexible lighting system can be designed so that you might have whatever level is desired for the occasion. Dimmers are low-cost additions that can be easily added to achieve this goal.

The right amount of light for area is also determined by the *size of an area.* The larger the room, the more lighting it will need. Rooms with high ceilings require more light than those with lower ceilings. The amount of *daylight* in the room will affect the amount of artificial light needed in the daytime.

When planning the lighting of any interior, consider *color and finish* of walls, ceilings, floors, and large drapery areas. These large surfaces will either reflect and redistribute light within a room or absorb a great deal of it. Their lightness or darkness greatly affects the amount of light in a room.

White surfaces reflect the greatest amount of available light. However, true white can create glare. Off-white is a better choice. Light tints of colors reflect light next best. Somber color tones absorb much of the light that fall upon them and reflect little light (see Table No. 2). It is important to remember that the light reflected from ceilings will be the same color as the ceiling. White ceilings reflect white light; blue ceilings give a bluish cast to the light.

Whatever the room size, keep wall colors within the 35- to 60-percent reflectance range. Ceilings should have reflectance values of 60 to 90 percent; floors at least 15 to 35 percent. Mat finishes (flat or low-gloss surfaces) on walls and ceilings diffuse light and reduce reflections of light sources. Glossy, highly polished or glazed surfaces should be avoided.

Table 2. Reflectance

Color	Approximate percent reflection
Whites:	
Dull or flat white	75-90
Light tints:	
Cream or eggshell	79
Ivory	75
Pale pink and pale yellow	75-85
Light green, light blue, light orchid	70-75
Soft pink and light peach	69
Light beige or pale gray	70
Medium tones:	
Apricot	56-62
Pink	64
Tan, yellow-gold	55
Light grays	35-50
Medium turquoise	44
Medium light blue	42
Yellow-green	45
Old gold and pumpkin	34
Rose	29
Deep tones:	
Cocoa brown and mauve	24
Medium green and medium blue	21
Medium gray	20
Unsuitably dard colors:	
Dark brown and dark gray	10-15
Olive green	12
Dark blue, blue-green	5-10
Forest green	7
Natural wood tones:	
Birch and beech	35-50
Light maple	25-35
Light oak	25-35
Dark oak and cherry	10-15
Black walnut and mahogany	5-15

QUALITY OF LIGHT

Try to provide a good quality, or comfortable, light in your home as well as the right amount of light. In a well lighted room, light is evenly distributed, free from glare and contributes to the appearance and enjoyment of the area.

To achieve *GOOD DISTRIBUTION* of light, place a low level of light evenly around the room. In many rooms large amounts of light for reading or other activities may be needed in only one or two areas, creating contrasting areas of extreme brightness and darkness (unbalanced light). In these instances, structural lighting can provide a low level of balanced light in the room where additional lamps are not feasible.

GLARE is a common problem in home light. Very *sharp contrasts* of unbalanced light cause glare, which causes discomfort, eye fatigue, and interferes with vision due to excessive brightness. Glare is not caused by too much light, but rather by incorrect placement of light, undiffused light, or the reflection of light from surrounding surfaces.

The *placement* of fixtures and bulbs out of direct view is important in the prevention of glare. Reflective glare can be caused by shiny counter tops, furniture, and room surfaces. Be sure to see fixtures lighted before you buy them to avoid purchasing one with reflective glare. Other surfaces that might produce glare should be avoided in favor of the softer matte finishes.

Diffusion of light is important to provide good distribution and to prevent glare. Diffusion can take place at the bulb or tube, the diffuser attached to the fixture, or the ceiling and walls in the room.

Incandescent bulbs and fluorescent tubes vary considerably in their ability to diffuse light. Fluorescent tubes provide a much softer, more diffused light than the incandescent bulb. Among the incandescent bulbs there is a range in diffusion from the clear bulb to those frosted inside and to the softer, heavier inside-coated bulbs.

The diffuser on a fixture might be a globe or shield to conceal the bulb or tube to produce a softer, more evenly distributed light.

No light bulb should be seen directly. If the bulb can be seen in the globe, the globe does not pass the test of a good diffuser. Shields also conceal the bulb or tube either completely (such as a wood facing on a valance) or from direct view from a normal position (such as louvers).

The surfaces in the area may also help to diffuse the light. The ceiling is especially important in this respect. Light directed upward onto a light matte finish ceiling will be reflected and distributed across the area. Reflective glare is commonly noticed from shiny surfaces in a room. For this reason surfaces such as mirrors, polished metals, glass or wood should be carefully placed to prevent glare.

The *AESTHETIC* quality of good lighting is often neglected. Light can be used to create desired moods, interest and variety in a room. It may accent interesting features of a room and camouflage others.

Deep shadows and excessive brightness should be avoided, but do not overlook the decorative aspects of soft shadows. Soft shadows create a mood of rest and relaxation. Shadows well used are able to make a room exciting and interesting.

Accent lighting may be a spotlight illuminating an interesting picture or brick wall. Since the eye follows light you may draw attention away from unattractive areas to ones more appealing.

HELPS USED TO ACHIEVE GOOD LIGHTING

Incandescent bulbs and fluorescent tubes are the usual sources of electric light in homes. There are advantages and disadvantages of each. Here are the good points.

Incandescent

1. Initial cost is less
2. Wider range of wattages available
3. Amount of light can be increased or decreased as needed by changing bulb size (fluorescent fixture will take only one size wattage tube)
4. No electronic interference
5. Less expensive fixture
6. Easily replaced

Fluorescent

1. Three to four times more light (lumens) per watt
2. More diffused light
3. Cooler light
4. Operates seven to ten times longer
5. Very adaptable to structural lighting

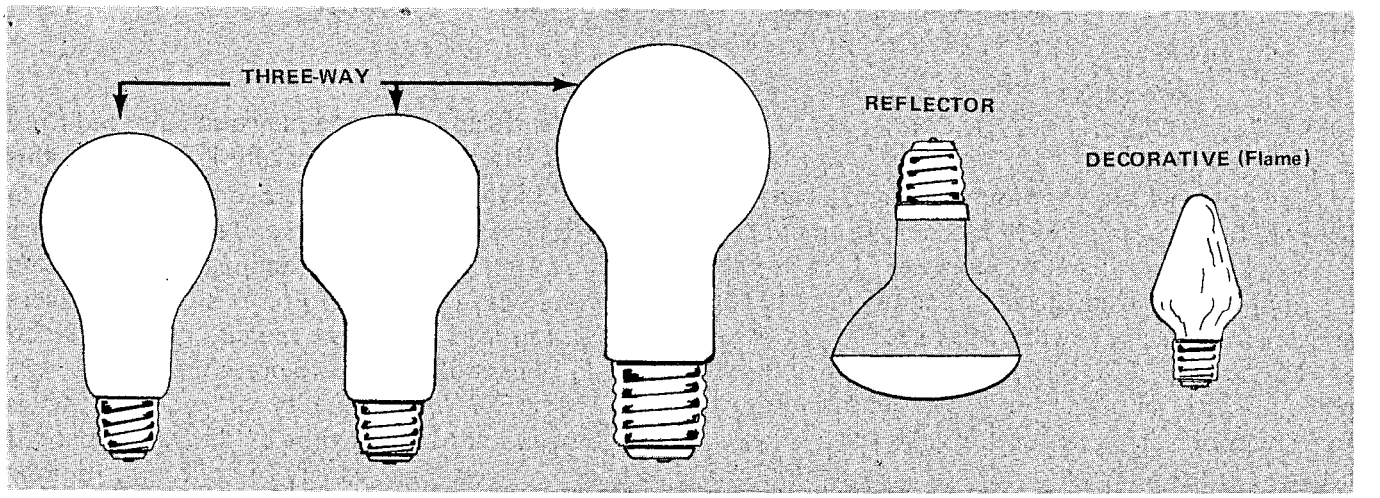

Incandescent Bulbs

The incandescent bulb comes in a wide assortment of shapes, colors, sizes, and wattages. General household bulbs, the most commonly used type, range from 15 to 300 watts. They are available in three finishes—inside frost, inside white (silica-coated), and clear. Incandescent bulbs are rated on their package as to their light output. Look for the lumen (light output) rating of each type of blub.

Inside frosted is the older bulb finish still in general use. Use bulbs of this type in well-shielded fixtures.

Bulbs with *inside white* finish (a milky-white coating) are preferred for many home uses. They produce diffused, soft white light and help reduce bright spots in thin shielding materials.

Decoratively shaped *clear* bulbs add sparkle to chandeliers or dimmer-controlled simulated candles.

Three-way bulbs have two filaments and require three-way switches on the socket. Each filament can be operated separately or in combination. Make sure that a three-way bulb is tightened in the socket so both contacts in the screw-in base are touching firmly.

Tinted bulbs create decorative effects indoors and outdoors. Home uses of these bulbs are best limited to lighting plantings, flowers, or art objects. You'll need to buy tinted bulbs of higher wattage because they give less light than white bulbs.

Silver-bowl bulbs are standard household bulbs with a silver coating applied to the outside of the rounded end. They are used base up, and direct light upward onto the ceiling or into a reflector. They are generally used with reflectors in basements, garages, or other work areas. Fixtures for silver-bowl bulbs are widely available.

Reflector bulbs are available with silver coatings either on the inside or outside of the bulbs. The *spotlight bulbs* direct light in a narrow beam and generally accent objects. The *flood-light bulbs* spread light over a larger area, and are suitable for flood-lighting horizontal or vertical surfaces.

Heat-resistant bulbs, called PAR bulbs because of the parabolic shape, are used outdoors. They are resistant to rain and snow.

Bulbs in decorative shapes are designed to replace bare bulbs in older fixtures (chandeliers and wall sconces); others combine contemporary styling and function. Bulb shapes include globe, flame, cone, mushroom, and tubular.

Some of these bulbs are made of diffusing type glass and are tinted to produce colored lighting effects. Clear bulbs may be needed to produce sparkle in crystal chandeliers. When selected to harmonize with fixtures and room decor, these decorative bulbs may offer a pleasing, low-cost solution to a lighting problem.

Colored floodlight bulbs are available for indoor or outdoor use. The tints—particularly pink and blue-white create nice effects on house plants and are flattering to people and furnishings. Strong colors—blue, green, and red—are best reserved for holiday and party decorations.

Long life bulbs of a given wattage give less light than ordinary bulbs but will last longer. They are best used in areas where it's difficult to change bulbs.

Table 3. Selection Guide for Incandescent Bulbs

Activity	Minimum recommended total wattage
Reading, writing, sewing:	
Occasional periods	150
Prolonged periods	200-300
Grooming:	
Bathroom mirror:	
1 fixture each side of mirror	one 75 or two 40's
1 cup-type fixture over mirror	100
1 fixture over mirror	150
Bathroom ceiling fixture	150
Vanity table lamps, in pairs (person seated)	100 each
Dresser lamps, in pairs (person standing)	150 each
Kitchen work:	
Ceiling fixture (two or more in a large area)	150 or 200
Fixture over sink	150
Fixture for eating area (separate from workspace)	150
Shopwork:	
Fixture for workbench (two or more for long bench)	150

Fluorescent Tubes

Most households use fluorescent lighting in some form. Although know-how is needed to select and use this light source correctly, it offers many advantages in home lighting. White fluorescent tubes are labeled "standard" and "deluxe." The whiteness of a standard tube is indicated by letters, WW for warm white; CW for cool white. The addition of an "X" to these letters indicates a deluxe tube.

A deluxe warm white (WWX) tube gives a flattering light, can be used with incandescent light, and does not distort colors any more than incandescent light does. A deluxe cool white (CWX) tube simulates daylight and goes nicely with cool color schemes of blue and green. Deluxe tubes are the only fluorescent tubes recommended for home use. They are worth waiting for it your dealer has to order them for you. Often your electric utility office will have a selection.

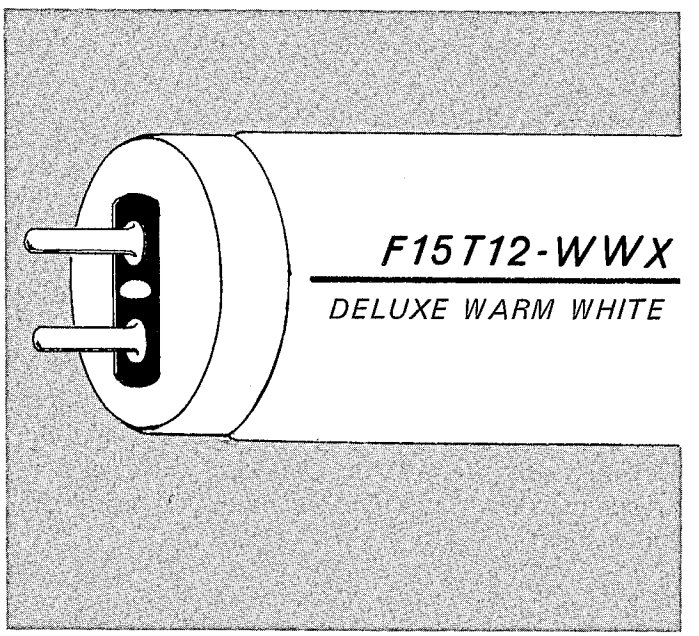

Table 4. Selection Guide for Fluorescent Tubes

(All are T12 (1½ inch diameter) tubes)

Use	Wattage and color
Reading, writing, sewing:	
Occasional	one 40w or two 20w, WWX or CWX
Prolonged	two 40w or two 30w, WWX or CWX
Wall lighting (valances brackets, cornices): Small living area (1-foot minimum)	two 40w, WWX or CWX
Large living area (16-foot minimum)	four 40w, WWX or CWX
Grooming:	
Bathroom mirror:	
One fixture each side of mirror	two 20w or two 30w, WWX
One fixture over mirror	one 40w, WWX
Bathroom ceiling fixture	one 40w, WWX
Luminous ceiling	For 2-foot squares, 4-20w, WWX or CWX
	3-foot squares, four 30w, WWX or CWX
	4-foot squares, four 40w, WWX or CWX
	6-foot squares, six to eight 40w, WWX or CWX
Kitchen work:	
Fixture on ceiling	two 40w or two 30w, WWX
Over sink	two 40w or two 30w, WWX or CWX
Counter top lighting	20w or 40w to fill length, WWX
Dining area (separate from kitchen)	15 or 20 watts for each 30 inches of longest dimension of room area, WWX
Home workshop	two 40, CW, CWX, or WWX

LIGHTING FIXTURES

Lighting fixtures usually provide the general lighting in a home. When they are carefully chosen they also add decorative tone and a pleasant atmosphere.

Basic principles of lighting—quantity, quality, color, and reflectance of light—should be considered in selecting fixtures.

The manufacturers' wattage rating and the size of the fixture must be large enough to accommodate the largest wattage bulb needed to light the area. Never use a bulb of larger wattage than recommended in the fixture. Often, you need more than one fixture.

Points to Check

Check fixtures carefully before buying them. Here are some points to keep in mind:

- Incandescent bulbs should be no closer than one-fourth inch to enclosing globes or diffusing shields.
- Top or side ventilation is desirable in a fixture to keep temperatures low and to extend bulb life.
- Inside surfaces of shields should be of polished material or finished with white enamel.
- Shape and dimension of a fixture should help direct light efficiently and uniformly over the the area to be lighted.
- There should be no reflective glare from the fixture itself when it is lighted.
- The diffuser should produce an even light void of direct views of the tube or bulb.

STRUCTURAL LIGHTING

Structural lighting is lighting that has been built into the house. This is usually a custom installation designed to fit a particular situation. It may be built in at the time the home is constructed or added later.

Structural lighting generally lightens and enhances walls and ceiling, producing a soft, balanced

light in a room. It is relatively shadow-free and therefore is a more flattering light than light from ceiling fixtures. It helps reduce the possibility of glare from other light sources. Recessed lighting is a form of structural lighting that may be used to spotlight a particular object, often to create decorative shadows.

METHODS OF STRUCTURAL LIGHTING

Valance

A lighted valance makes a room appear more spacious and dramatizes colors and textures. Valance boards are open at top and bottom and are usually mounted above draperies. The light is directed up and is then reflected and spreads across the ceiling for general lighting. The downlight accents the draperies. In the evening this light provides a substitute for the sunlight seen here during the day. Allow from 10" to 12" between the ceiling and top edge of the valance. For efficient structural lighting, follow dimensions exactly. Valance lighting fixtures can be wired for entrance switching, and dimmer-controlled fixtures may be installed to increase or decrease the level of the lighting.

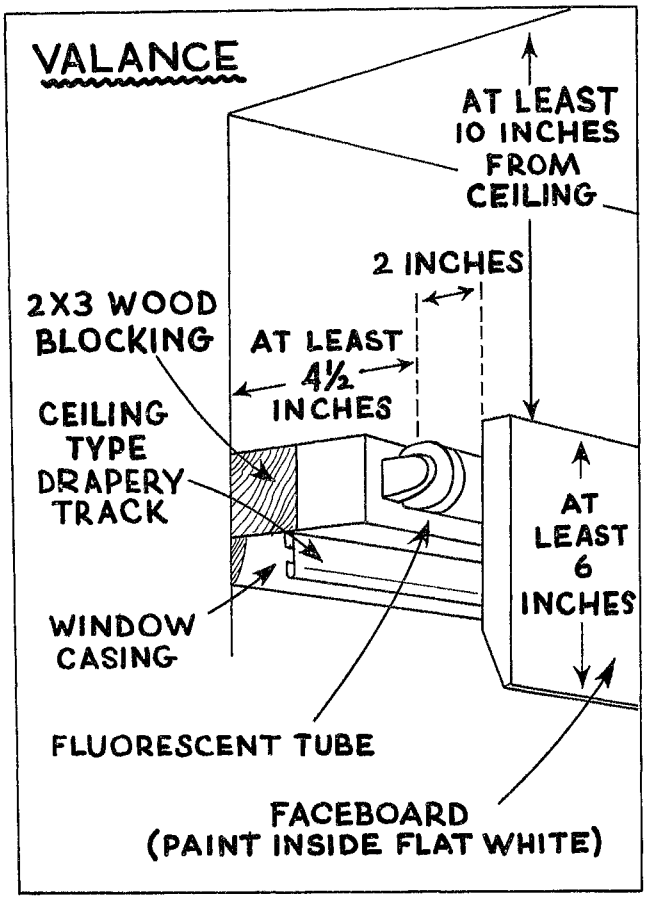

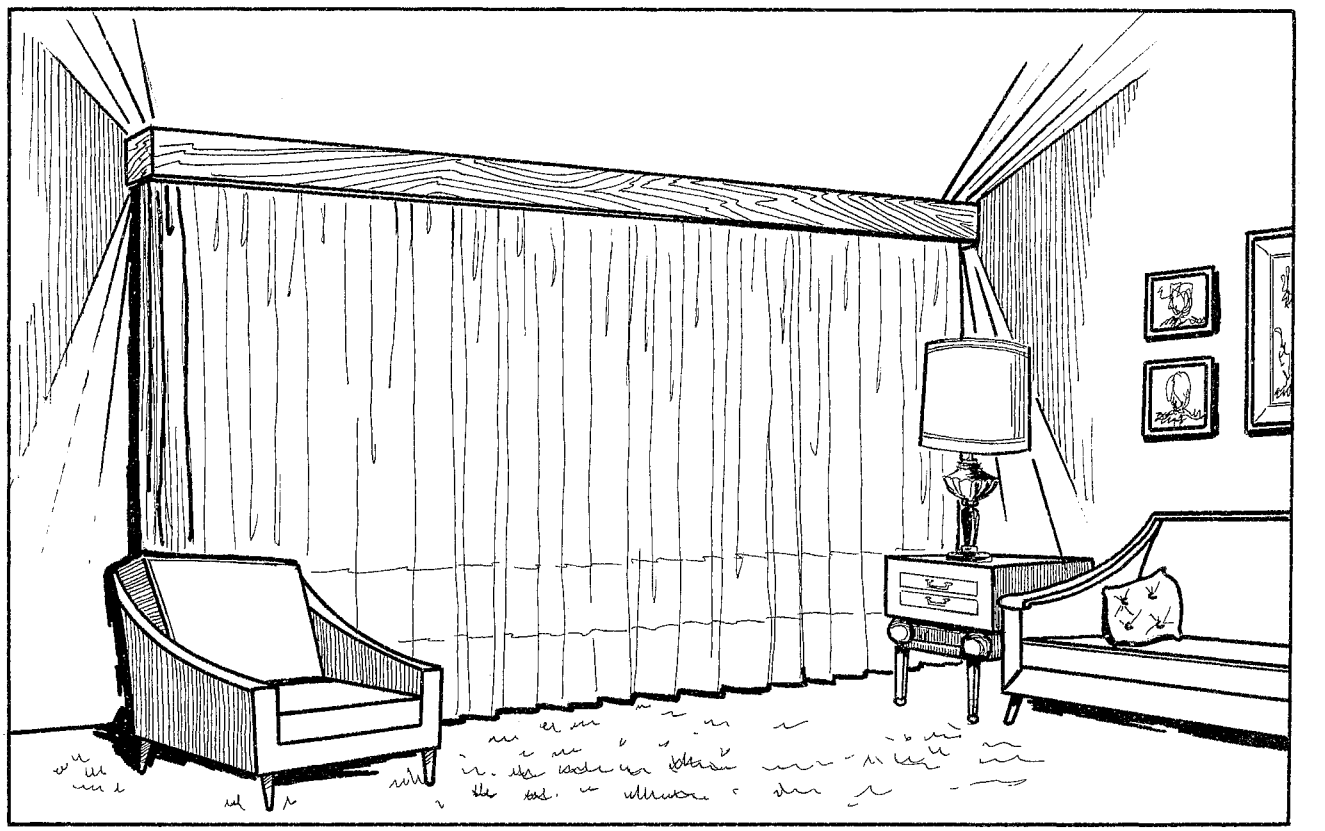

VALANCE

Cornice

Cornice lighting, generally mounted at the junction of the wall and the ceiling, is closed at top and extends the full length of the wall. A lighted cornice may be used with or without draperies. Cornices direct light downward to enliven wall textures, murals, scenic wallpaper, picture arrangements, art objects, or draperies. Lighted cornices are effective in low-ceilinged rooms where they give an illusion of height. The faceboards may be painted, wall-papered, or covered with fabric. Since lighted cornices do not supply upward light, it is well to use open-top lamps in the same room so that some light does reach the ceiling.

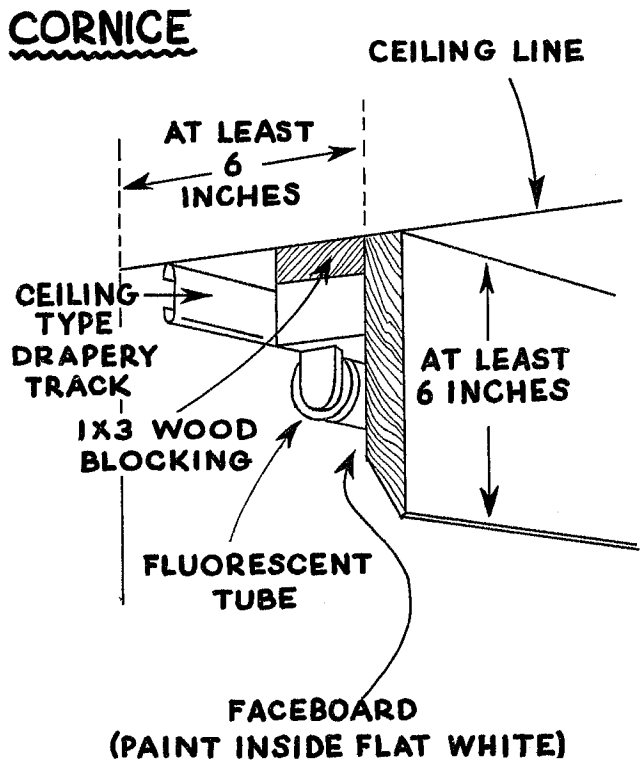

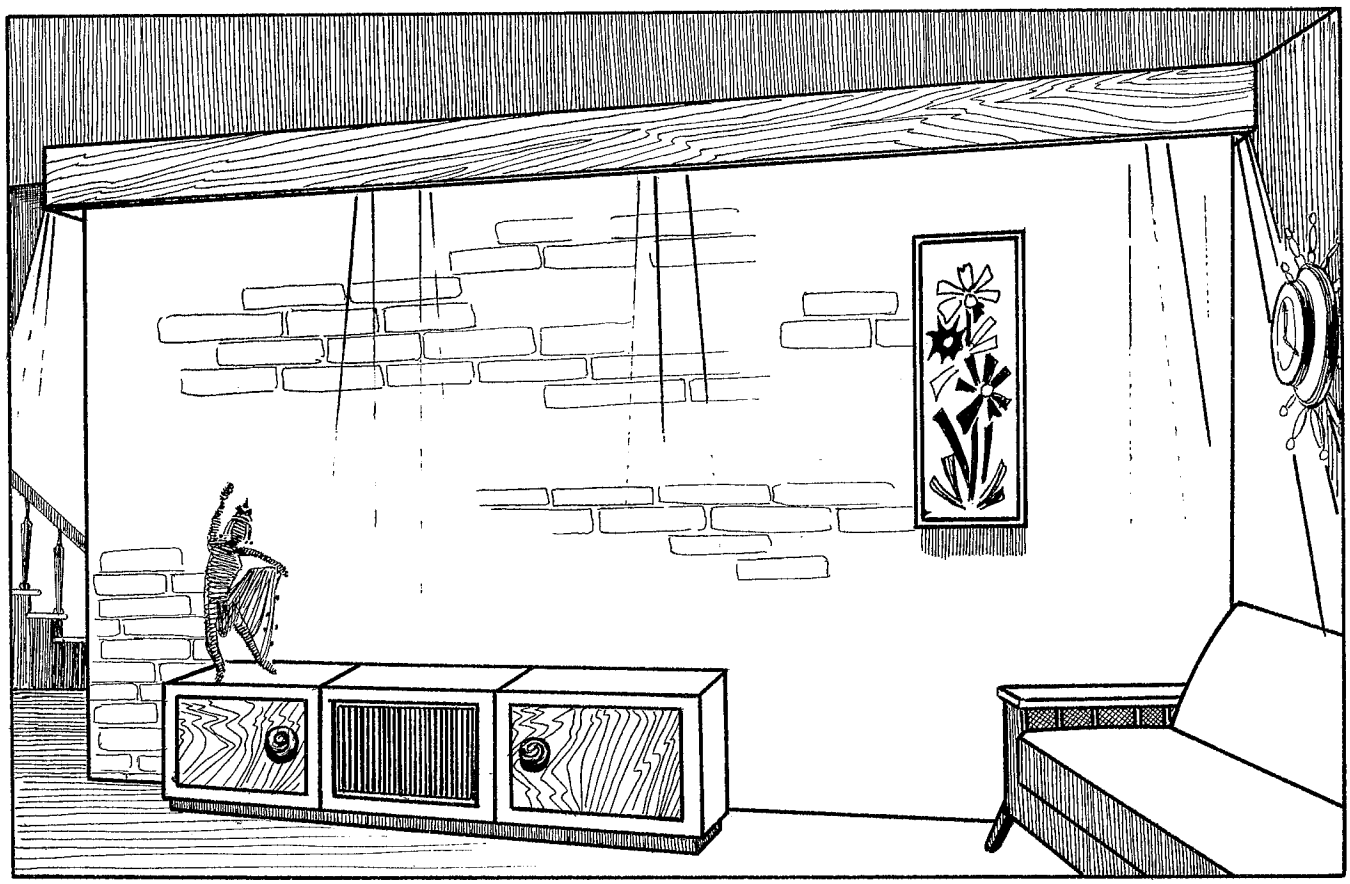

CORNICE

Soffit

Two 30-watt or 40-watt fluorescent tubes (deluxe warm white) may be recessed in a soffit above kitchen sink or bathroom lavatory. The fixture may be shielded with frosted glass or plastic to make it similar to a recessed unit. The entire interior of the soffit should be painted flat white to reflect the light downward. Such an installation gives comfortable, diffused downlight for easy seeing at sinks or along dressing counters in bathrooms. Incandescent lighting can also be used in a soffit. Two 75-watt inside frosted bulbs, spaced fifteen inches apart, can be mounted on the ceiling or front edge of soffit behind a face board.

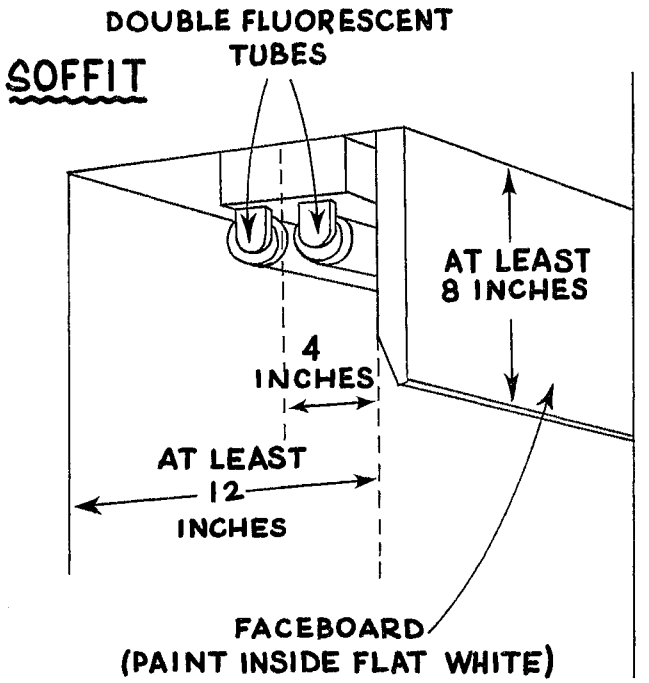

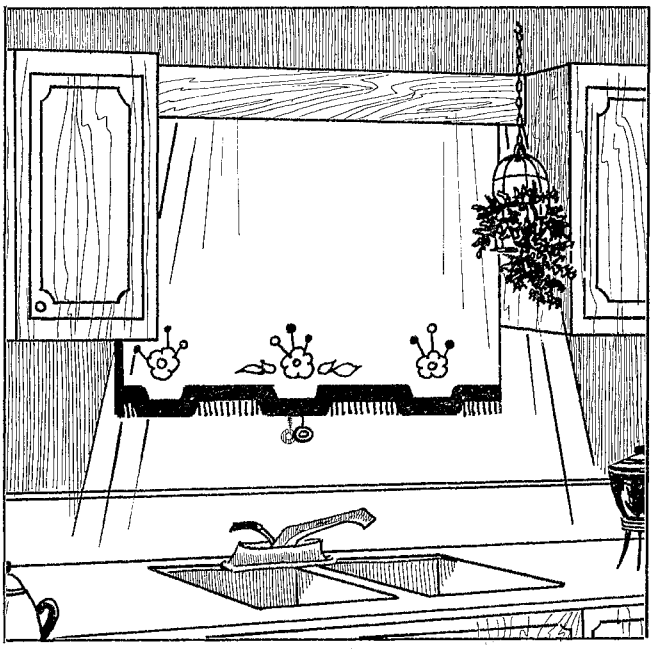

SOFFIT

Bracket

A lighted bracket is similar to a lighted valance except that it is located on a wall instead of over windows. A bracket above a sofa can provide both general and local lighting. Brackets can be mounted at suitable levels for lighting work counters, snack bars, hallways, pictures and wall hangings, and for reading in bed. The bottom edge of the bracket faceboard should be placed 30" above the top of mattress for reading in bed. For general lighting, the bottom edge of the bracket should be at least 65" from the floor. These are usually built to look compatible with door and/or window height. For local lighting,the bottom edge of the bracket should be about 55 inches from the floor. Eye levels of persons both sitting and standing must be considered to prevent direct view of the light source.

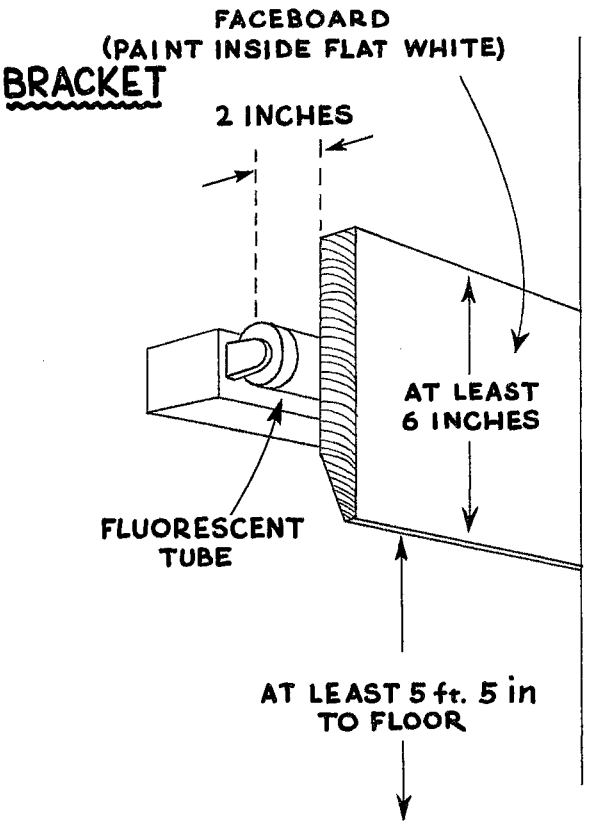

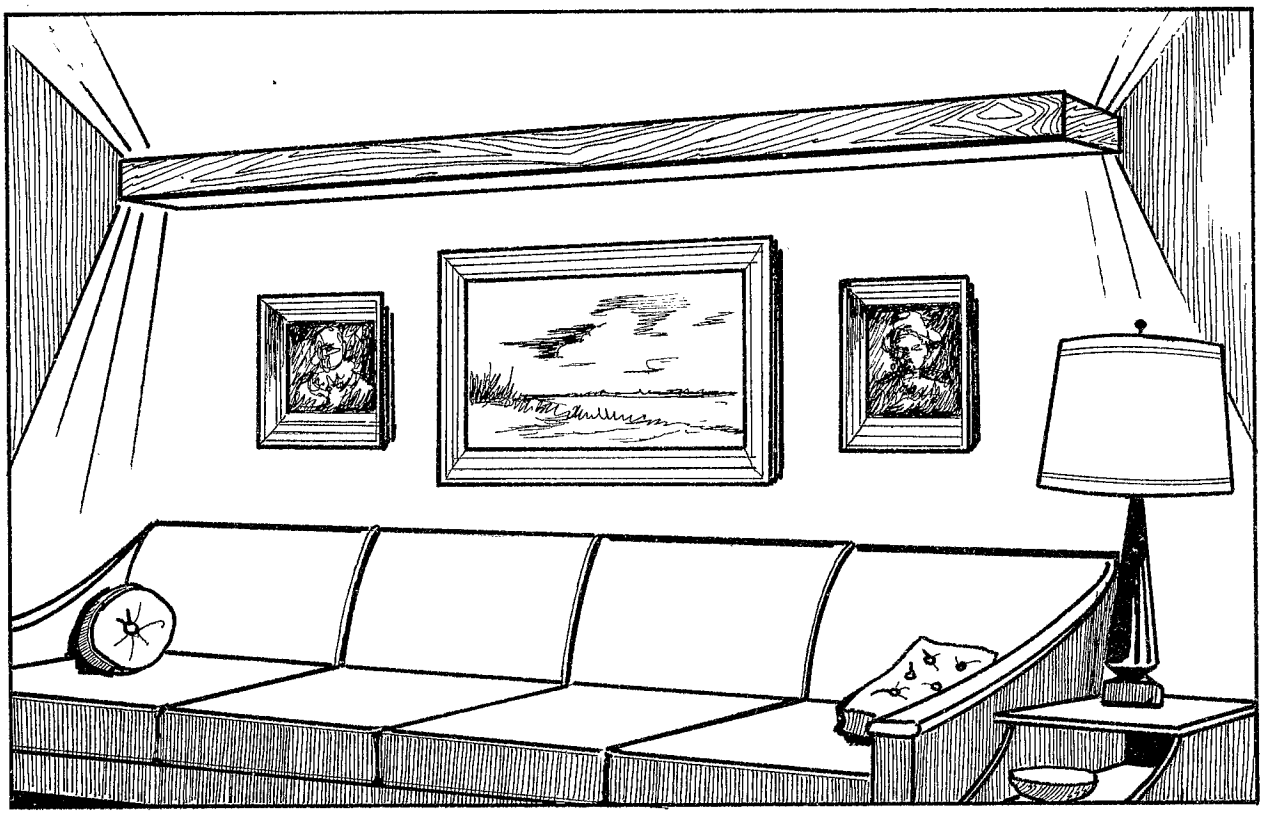

BRACKET

Luminous Ceiling Panels

A luminous ceiling is created by fixtures recessed into the ceiling. It creates a soft shadow-free light and gives a feeling of spaciousness. For this reason it is well-adjusted to the bathroom, small kitchens and work and recreation areas where a large amount of light is needed. A depth of 10 to 12 inches is needed in the ceiling for the panels.

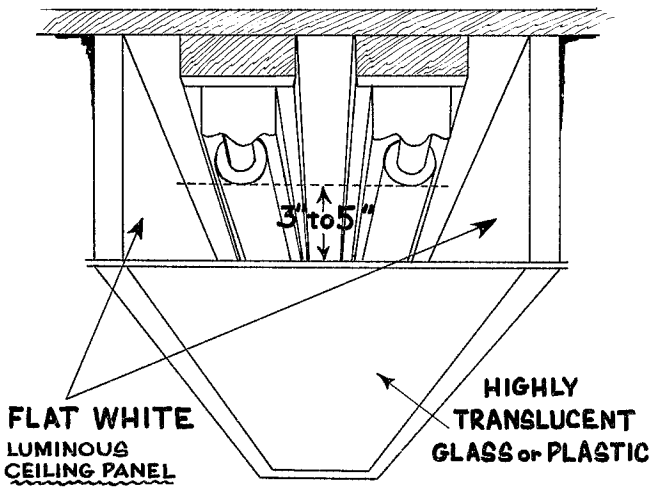

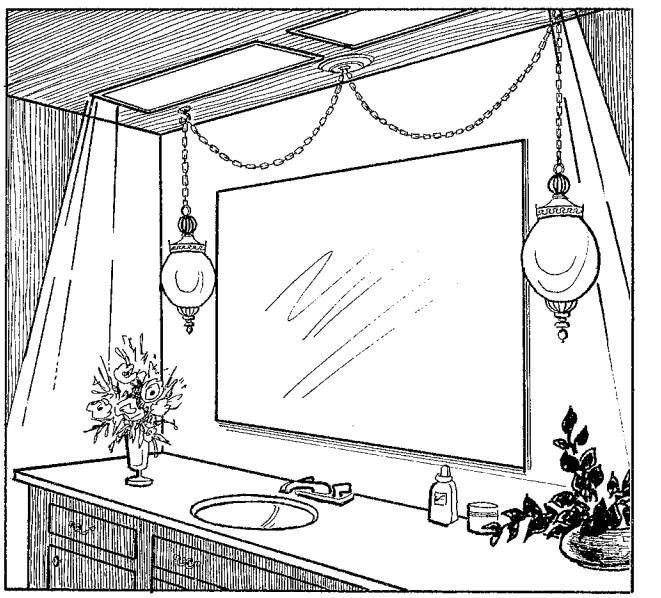

LUMINOUS CEILING PANELS

Cove Lighting

Cove lighting directs all of the light up to the ceiling where it is reflected back into the room. The light is very uniform and soft but can be rather uninteresting and flat. Therefore, cove lighting should be used with other lighting from table lamps and fixtures. This lighting method can be used effectively with ceilings that are high, slanted or unusual in any way.

The cove should only be used with white or near white ceilings. There should be a minimum of 12 inches from the shielding to the ceiling. The lower the cove is on the wall, the wider the light distribution will be across the ceiling.

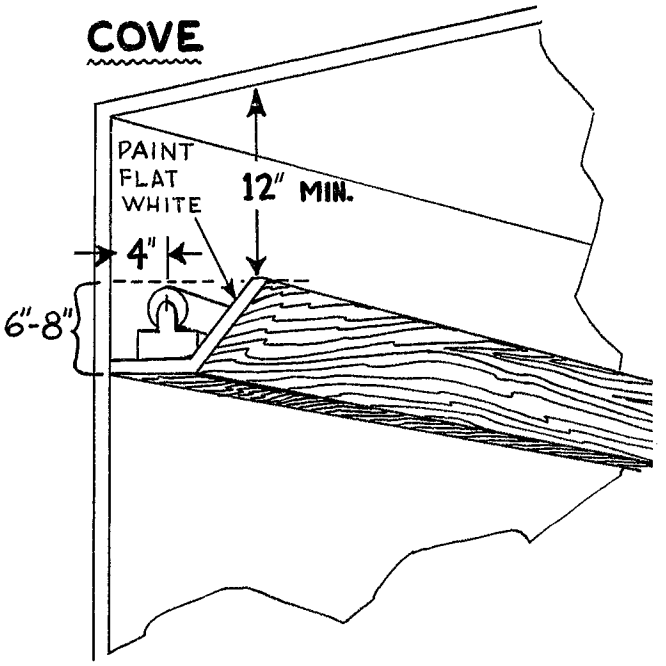

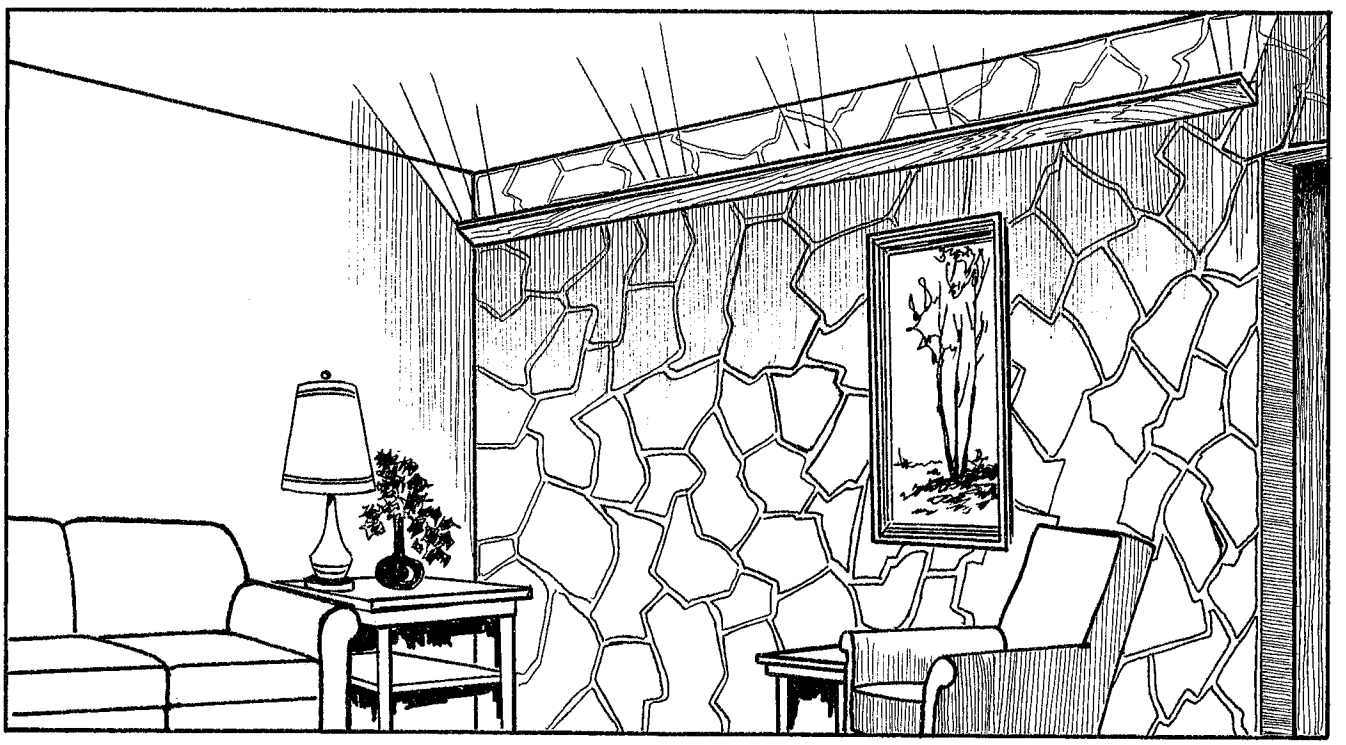

COVE LIGHTING

Recessed Lighting

There are many varieties of recessed lighting that can be used in the home. This form of lighting can be used to create unusual lighting effects, spotlight decorative features such as wall hangings or textured walls, or provide specific lighting for task areas or general lighting for a room.

In this form of lighting the fixture is recessed into the ceiling. The direction of the light is downward, giving little opportunity for the light to be diffused or reflected around the room. Since little light is reflected to the ceiling, this method should be accompanied by fixtures suspended from the ceiling or by open-top lamps around the room.

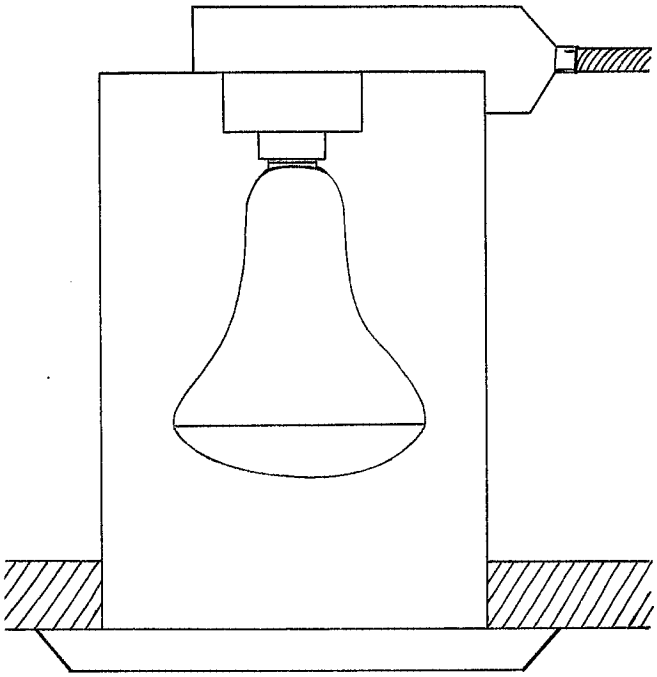

RECESSED

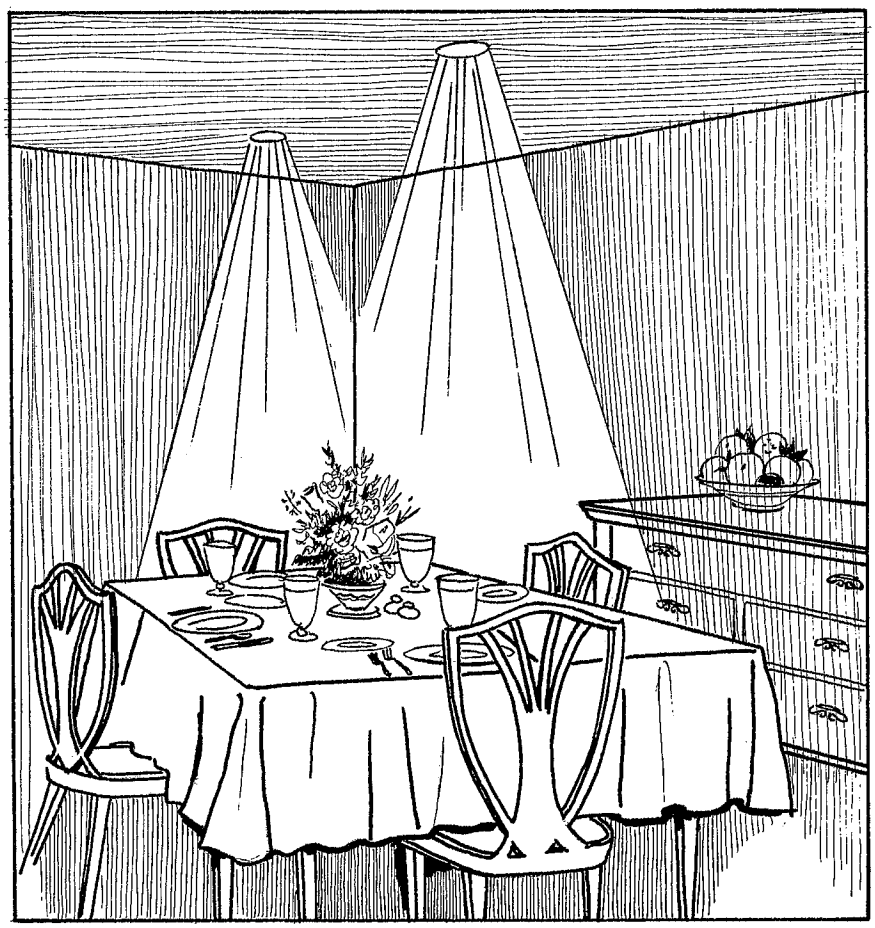

RECESSED LIGHTS

HOW TO IMPROVE YOUR PRESENT LIGHTING

—When you redecorate, finish walls in light pastel colors and ceilings in white or near white or a pale tint. Flat or low-gloss paint on walls and ceilings helps diffuse light and makes lighting more comfortable. Use sheer curtains or draperies in light or pastel tints.

—Add portable lamps for better balance of room lighting.

—Install structural wall lighting in living areas where there is only one ceiling light or none.

—Replace present bulbs with those of higher wattage, but do not exceed the rated wattage of the fixture.

—For efficiency, use one large bulb rather than several small ones. A 100-watt bulb gives as much light as six 25-watt bulbs, but uses only about two-thirds as much current.

—Replace outmoded bare-bulb fixtures with well-shielded ones.

—Cover all bare bulbs or tubes in a ceiling fixture with a shade or diffuser. Some of these diffusers clip to the bulb. Others hang from small chains attached to the husk of the fixture. Large diffusers, sometimes called adaptors, may have supporting frames that are screwed on the sockets of single-bulb fixtures. An inexpensive way to avoid the glare of bare bulbs in a ceiling fixture is to replace these bulbs with silver bowl bulbs or decorative mushroom shaped bulbs.

—Keep all light sources operating efficiently by replacing blackened bulbs and tubes promptly and cleaning bulbs and tubes frequently.

—Install dimmers in areas where a change in lighting is needed. Dimmers will add convenience, safety, and flexibility to home lighting in bedrooms, bathrooms, halls, and living rooms. Gradations of light—from full bright to very dim—are possible simply by turning a knob. Dimmers are inexpensive and easy to install.

You can make dramatic changes in the mood of a room by softening lights with a dimmer switch. Lights can be lowered when listening to music or enjoying a fire on the hearth. A low level of lighting can be used as would a night light in halls and baths.

Dimmers for incandescent bulbs are simple, compact, and can be mounted in walls in much the same way as off-on switches. Be sure that the wattage capacity of the dimmer control is equal to or more than the total wattage to be controlled.

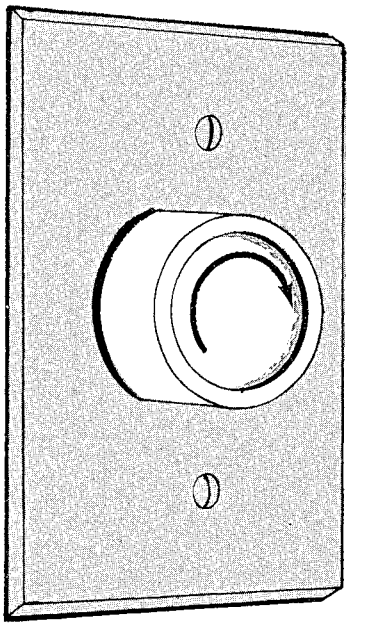

Dimmer-controlled fluorescent fixtures must be preplanned with your power supplier or electric contractor before installation. The control combines with a special built-in ballast, and can operate one or more specially designed fluorescent fixtures as a unit.

LIGHTING MAINTENANCE AND ENERGY CONSERVATION

Home lighting equipment needs regular care and cleaning to keep it operating efficiently. A collection of dirt and dust on bulbs, tubes, diffusion bowls, lampshades, and fixtures can cause a substantial loss in light output.

It's a good idea to clean all lighting equipment at least four to six times a year—bowl-type portable lamps should be cleaned monthly.

Here are some suggestions for taking care of lamps and electrical parts:

— Wash glass and plastic diffusers and shields in a detergent solution, rinse in clear warm water, and dry.

— Wipe bulbs and tubes with a damp, soapy cloth, and dry well.

— Replace all darkened bulbs. A darkened bulb can reduce light output 25 to 50 percent, but uses almost the same amount of current as a new bulb

Bottom photograph shows room with lights dimmed from full bright (top photo).

operating at correct wattage. Darkened bulbs may be used in closets or hallways where less light is needed.

— Replace fluorescent tubes that flicker and any tubes that have darkened ends. A long delay in starting indicates a new starter is probably needed. If a humming sound develops in a fluorescent fixture, the ballast may need to be remounted or replaced.

PROPER WIRING MAKES GOOD LIGHTING POSSIBLE

Good quality, adequately protected wiring makes it possible to light your home well. It also provides for convenient use of electrical equipment.

Safety is assured by careful inspection and follow-up maintenance. Make certain that all wiring complies with the National Electrical Code and meets local and area requirements. Each fixture, control, or electrical part should carry the label of the Underwriter's Laboratories (U.L.). (This seal indicates that standards of U.L. have been met.)

Efficient wiring has outlets located so that no point along the floor line in any usable wall space is more than six feet from an outlet. Wire size is large enough to prevent excessive voltage drop that results in poor lighting (a 5-percent voltage loss produces a 17 percent loss of light from an incandescent bulb).

Install enough circuits to provide electricity where you want it without overloading any one circuit. Locate switch controls at all principal doorways. Modern wiring systems generally use standard switches, but low-voltage relay switching for multiple-point light and equipment control is on the increase. Special controls—dimmers, timers, and photocell units—all have a place in the effective performance of equipment and lighting.

A service entrance (fuse box or circuit breaker) geared to present and future family needs is essential. A 100-ampere service entrance—the minimum code requirement—provides for modern living in a small home. If you have a large house or expect to add large electrical appliances, consider installing a 250-or 200-ampere service entrance. The 200-ampere service provides for electric space heating and other possible applications.

LIGHTING CHECK-UP

Are all ceilings painted a light color to provide greater reflectance?

Are all bulbs or tubes covered by a shield of some sort?

Do you have a place in your home that has sufficiently high levels of lighting for tasks such as sewing or reading?

Does the lighting add to the beauty of your home?

Have you used light and shadow to create interesting areas?

Have you provided for different levels of lighting in a room by using a dimmer or other lighting methods?

Are there night lights in hallways and bathrooms?

Are stairs well lighted?

Can rooms be lighted from a switch as you enter?

Can you control garage lighting from the house?

Are entry ways and walkways adequately lighted for safety?