University of Nebraska - Lincoln
DigitalCommons@University of Nebraska - Lincoln

Historical Materials from University of Nebraska-Lincoln Extension

Extension

1977

EC77-717 3 Inch 150-Gal Siphon-Flush Tank

G. Brent Parker

Richard J. Smith

Thamon E. Hazen

Follow this and additional works at: http://digitalcommons.unl.edu/extensionhist

Parker, G. Brent; Smith, Richard J.; and Hazen, Thamon E., "EC77-717 3 Inch 150-Gal Siphon-Flush Tank" (1977). *Historical Materials from University of Nebraska-Lincoln Extension*. 4563.
http://digitalcommons.unl.edu/extensionhist/4563

This Article is brought to you for free and open access by the Extension at DigitalCommons@University of Nebraska - Lincoln. It has been accepted for inclusion in Historical Materials from University of Nebraska-Lincoln Extension by an authorized administrator of DigitalCommons@University of Nebraska - Lincoln.

AGRI
S
85
E7
#77-717
c.2
EC 77-717

3-INCH 150-GAL SIPHON-FLUSH TANK

AED AGRICULTURAL ENGINEERS' DIGEST

Table of Contents

Introduction
Construction
- List of Materials
- Tools needed
- Assembly

Start-up procedure for a dry tank
Regulating and distributing flow
Trouble-shooting
- Tank overflows without flushing
- Tank partly full and discharging at same rate as filling
- Irregular flushing with the tank partly full

Theory of operation
- Components
- Filling
- Discharge

Suggestions for multiple and larger units
- One 3" siphon in a different sized tank
- Multiple 3" siphons under one bell
- Larger diameter pipes

Introduction

A channel with flowing water is one way to remove manure from a building and is part of a total manure handling system. A large volume of water can be discharged periodically with tilting tanks, gated tanks, or siphon-flush tanks. A siphon-flush tank can be made from the information in this digest with available standard parts. Refer to MWPS-18, "Livestock Waste Facilities Handbook," for more information on waste systems.

The siphon-flush tank is a simple device, but certain features are very important. This digest describes just one size of tank system—a 3" siphon in a 150 gal tank. This size has been used successfully in swine nursery and finishing units and in poultry units. It has been successfully used in swine finishing units housing about 400 hogs. Recommended maximum open flush gutter width is 30". The gutter length can be up to 125' at a slope of about 1/8"/ft. The siphon will flush about 120 gallons in 40-45 seconds, a rate of about 170 gpm. If you need to flush longer or wider gutters or gutters with less slope, consult your state Extension Agricultural Engineer.

Fig 1 is a cut-away drawing of the siphon-flush tank. The unit uses a standard oval stock tank, 150 gal capacity and 24" high. The bell (inverted pail) and the tank are galvanized steel, but the piping is plastic sewer and vent pipe. The plastic pipe is relatively lightweight, easy to handle, and easy to use. **Caution: Provide adequate support for the weight of the tank and water—about 1300 lb.**

Larger and smaller tanks work, but individual adjustments are necessary. See Suggestions for Multiple and Larger Units.

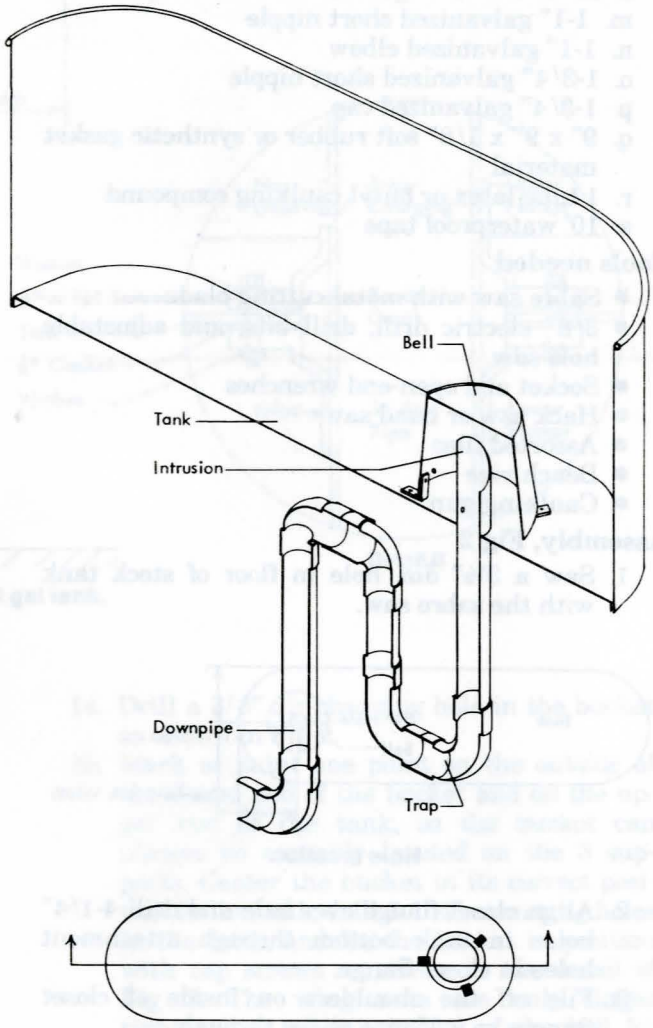

Fig 1. Cutaway of a siphon-flush tank.

Copyright © 1976 Midwest Plan Service, ISU Ames, IA 50011. All rights reserved. Rights negotiable, inquiry invited.

Major credit for this publication goes to G. Brent Parker, Richard J. Smith, and Thamon E. Hazen, Agricultural Engineers at Iowa State University.

Notice: *Some of the details of the dosing siphon described in this publication are covered by U.S. Patents No. 3,797,513; 3,874,402; and 3,881,506 owned by the Iowa State University Research Foundation, Inc., 213 Beardshear Hall, Ames, IA 50011. Any company planning to make and sell dosing siphons using this patented technology should contact the Research Foundation.*

Construction

List of materials

a. 150 gal, oval galvanized steel stock tank, 24" high
b. 10 qt galvanized pail with a top at least 12" in diameter (remove the handle)
c. 10 ft of 3" dia. plastic sewer and vent pipe More is needed if the lower end of the downpipe is more than 80" below the bottom of the tank
d. 5-90°, 3" pipe elbows
e. 2-3"x4" plastic pipe closet flanges
f. Plastic pipe cement
g. 4-1/4" dia., 1 ½" long, brass cap screws
h. 6-1/4" dia., 1" long, brass cap screws
i. 10-1/4" dia. brass nuts
j. 11-1/4" dia. brass washers
k. 3-1/4" dia. brass wing nuts
l. 12" of 1/8" x 1" galvanized steel strap
m. 1-1" galvanized short nipple
n. 1-1" galvanized elbow
o. 1-3/4" galvanized short nipple
p. 1-3/4" galvanized cap
q. 9" x 9" x 1/8" soft rubber or synthetic gasket material
r. 1 tube latex or butyl caulking compound
s. 10' waterproof tape

Tools needed

- Sabre saw with metal cutting blade
- 3/8" electric drill, drill bits, and adjustable hole saw.
- Socket and open-end wrenches
- Hack saw or band saw
- Assorted files
- Bench vice
- Caulking gun

Assembly, Fig 2

1. Saw a 3½" dia. hole in floor of stock tank with the sabre saw.

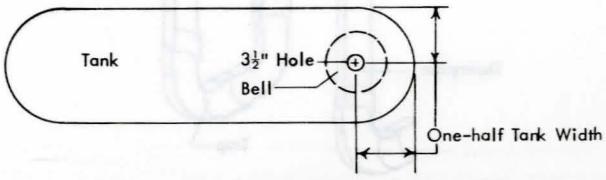

Hole location

2. Align closet flange over hole and drill 4-1/4" holes in tank bottom through attachment holes in closet flange.
3. File off the shoulders on inside of closet flanges so a 3" pipe slides through.
4. Cut one 28" length of the 3" plastic pipe; cut one end at a 45° angle. The end of the pipe cut at an angle is the intrusion.
5. Cut one gasket to match the closet flange and its holes, put a ring of caulking compound on both sides of this gasket as shown in Fig 2.
6. Assemble the closet flanges and gasket on the tank with the gasket and caulking between the bottom flange and the tank. Put the intrusion through the two flanges for alignment; **do not** cement the pipe yet.
7. Fasten the flanges to the tank with the 1½" cap screws with a washer under both the bolt head and the nut; tighten the nut but do not overtighten. Remove the plastic pipe carefully.
8. Make two 180° return bends. For each, cement a 3" length of pipe (nipple) into a 90° elbow. Insert (no cement) 12" (or longer) lengths of pipe into the other end of this elbow and into one end of another elbow; work on a table. Cement the nipple to the second elbow and quickly make sure the 2-12" lenghts are parallel. Then remove the 12" lengths of pipe from the elbows.

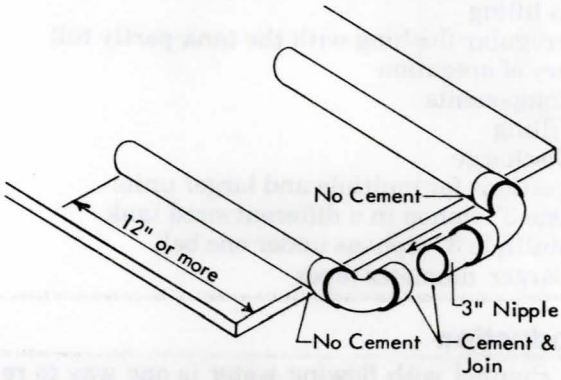

Use no cement in steps 9-10

9. Slip the intrusion into the closet flanges until it projects 9" above the tank floor. Slip on one 180° return bend, insert a 12" long piece into this bend, and then put the second return bend in position.
10. Cut the downpipe to the correct length for your installation and slip this into the upper return bend.
11. Mark on the intrusion pipe the section that will be covered by the lower flange. Remove the pipe and apply cement to the pipe on the marked section. **Do not put cement on the flanges.** The intrusion pipe is cemented to the lower flange only, so it can be removed from the tank if necessary.
12. When the cement is set, drill the trap-charging hole as shown in Fig 2; this hole is 1½" above the tank bottom and should face the long part of the tank for easier access if it plugs.
13. Cut the 1/8" x 1" steel strap into 3-4" lengths for the bell supports; drill a 5/16" hole 3/4" from each end of the straps; bend each strap to suit the slope of the bucket with the bend 1½" from one end; drill 3 equally spaced, 1/4" holes 1" from the open end of the bucket; cut 1 gasket to match the

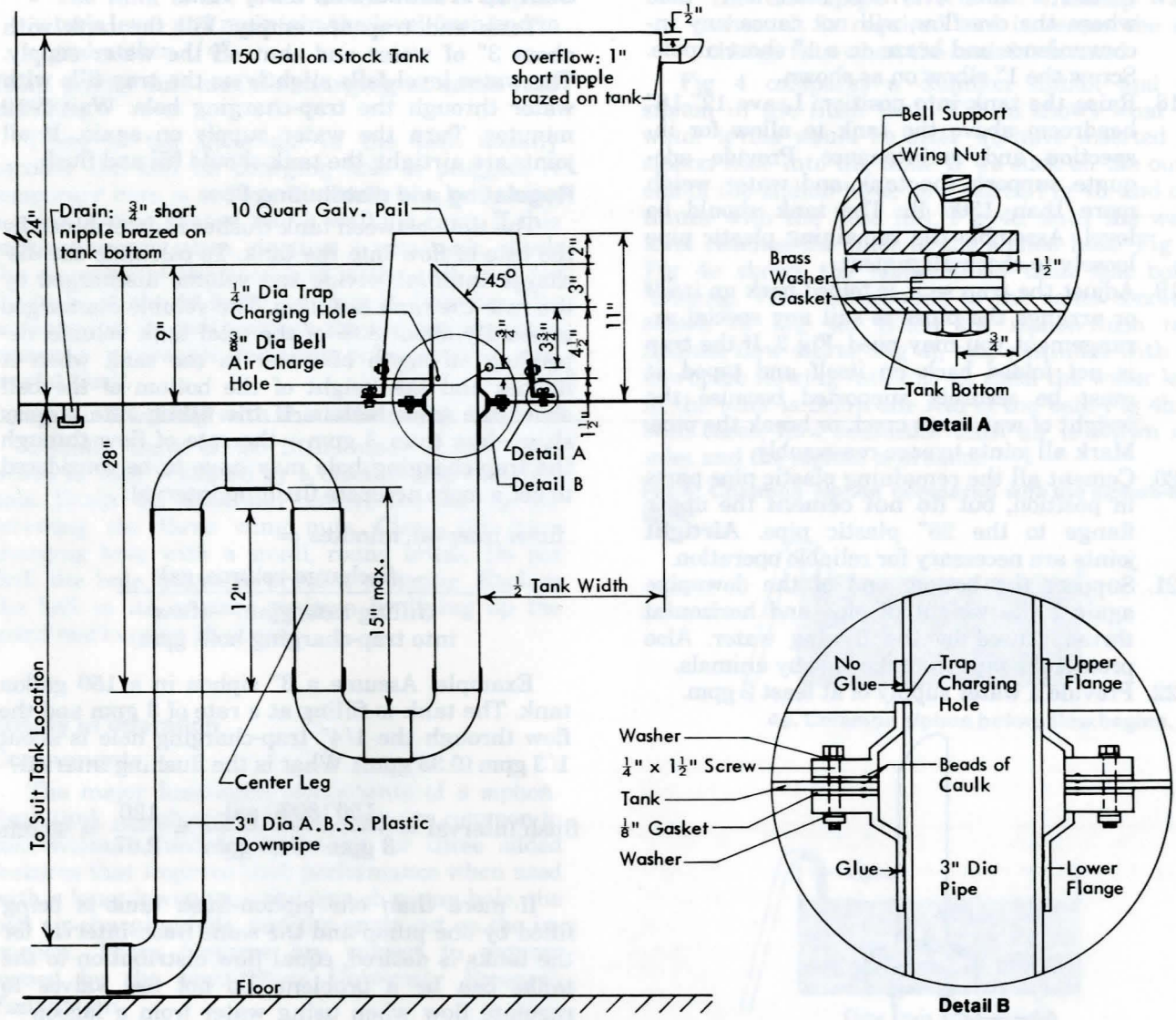

Fig 2. Details of a siphon-flush tank using a 3" siphon in a 150 gal tank.

washer for each of the 3 bolts; bolt the longer ends of the supports to the bucket, using 1" cap screws and nuts.

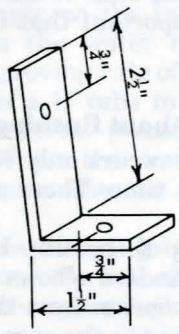

Bell support

14. Drill a 3/8" air-charging hole in the bucket as shown in Fig 2.
15. Mark or paint one point on the outside of the closed end of the bucket and on the upper rim of the tank, so the bucket can always be correctly located on the 3 supports. Center the bucket in its correct position in the tank; drill 3-1/4" mounting holes in the tank, and fix the bucket in position with cap screws as shown in the detail of Fig 2. The wing nuts are only finger tightened to allow removal of the bell for maintenance.
16. Install a drain on the bottom of the tank: drill a 3/4" hole and braze on a 3/4" short nipple. Apply thread sealing compound to a 3/4" pipe cap and tighten just enough to seal; the cap is removed to drain the tank during routine servicing.

17. Install a tank overflow. Drill a 1" hole where the overflow will not cause any inconvenience and braze on a 1" short nipple. Screw the 1" elbow on as shown.
18. Raise the tank into position. Leave 12"-18" headroom above the tank to allow for inspection and maintenance. Provide adequate support; the tank and water weigh more than 1300 lb. The tank should be level. Assemble the remaining plastic pipe loosely to check alignment.
19. Adjust the trap so it is folded back on itself or arrange the pipes to suit any special arrangement you may need. Fig 3. If the trap is not folded back on itself and taped, it must be securely supported because the weight of water can crack or break the pipe. Mark all joints to ease reassembly.
20. Cement all the remaining plastic pipe parts in position, but **do not cement** the upper flange to the 28" plastic pipe. **Airtight** joints are necessary for reliable operation.
21. Support the bottom end of the downpipe against the weight of pipe and horizontal thrust caused by the flowing water. Also protect the pipe from damage by animals.
22. Provide a water supply of at least 2 gpm.

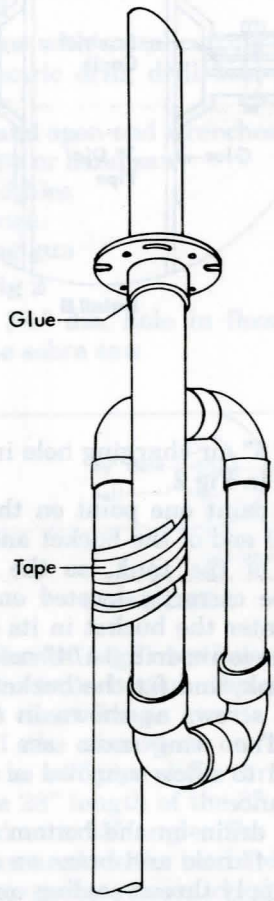

Fig 3. Folded trap.
The folded trap is easier to support than the unfolded trap of Fig 1 and 2.

Start-Up Procedure for a Dry Tank

Tank and trap are empty. Fill the tank with about 3" of water and shut off the water supply. The water level falls slightly as the trap fills with water through the trap-charging hole. Wait 5-10 minutes. Turn the water supply on again. If all joints are airtight, the tank should fill and flush.

Regulating and distributing flow

The time between tank flushes is determined by the rate of flow into the tank. To calculate the discharge interval, divide the volume discharged by the rate the tank is filling. The volume discharged is usually about 80% of the total tank volume, depending on depth of water in the tank when it flushes and the height of the bottom of the bell above the tank bottom. If the filling rate is very slow—less than 3 gpm—the rate of flow through the trap-charging hole may have to be considered to get a more accurate flushing interval.

$$\text{flush interval, minutes} = \frac{\text{discharge volume, gal}}{\text{(filling rate, gpm)—(flow into trap-charging hole, gpm)}}$$

Example: Assume a 3" siphon in a 150 gallon tank. The tank is filling at a rate of 3 gpm and the flow through the 1/4" trap-charging hole is about 1/3 gpm (0.33 gpm). What is the flushing interval?

$$\text{flush interval} = \frac{150\ (80\%)\ \text{gal}}{3\ \text{gpm} - 0.33\ \text{gpm}} = \frac{120}{2.67} = 45\ \text{min}$$

If more than one siphon-flush tank is being filled by one pump and the same flush interval for the tanks is desired, equal flow distribution to the tanks can be a problem. Do not use valves to regulate flow when using water from a lagoon—they frequently plug with hair and slime. To equalize the flow, the head (pressure) loss through each line used to fill the tanks must be equal. Head loss can be equalized by running the same length of pipe to each tank filling point that is at the same height. If the tanks are close together, raising or lowering the tank inflow pipe a few inches will often balance the flows. If the tanks are far apart, some restriction at the ends of the lines may be required. It is very important that the restriction is easy to clean.

Trouble-shooting

Tank overflows without flushing

Overflow usually occurs only when the tank is started for the first time. There are two possible causes:

- The center leg of the trap has been cut too long, or nonstandard elbows have been used. Check the dimension from the bottom of the upper elbows to the top of the lower elbows—it must be 15". Lengthen or shorten the pipe as required.

- The tank is not level. Check with a carpenter's level and maintain the level from end to end within 1/4".

Tank partly full and discharging at same rate as filling

There is too little air in the bell, usually because the bell air-charging hole is plugged. A temporary cure is to blow air under the bell using a piece of pipe shaped like a walking cane. If this problem occurs when starting a new tank, check the diameter of the open end of the pail used for the bell—it should be 10" or more in diameter. The air entering the bell through the air-charging hole makes a noticeable bubbling noise after a successful flush.

Irregular flushing with the tank partly full

Usually there is too little water in the trap, which in turn is caused by a blocked trap-charging hole. Drain the tank and remove the bell by unscrewing the three wing nuts. Clean the trap-charging hole with a small, round brush. Do not drill the hole larger to prevent plugging. Replace the bell in its original position by lining up the paint marks, step 16 above.

Theory of operation

Components

The major functional components of a siphon-flush tank are shown in Fig 1. They are common to conventional flush tanks, except for three added features that improve tank performance when used with a long downpipe—the trap-charging hole, the bell air-charging hole, and the angle cut on the intrusion. These features are subject to patents owned by the Iowa State University Research Foundation.

- The **tank** is a water reservoir between flushes and accumulates enough water height to discharge the trap suddenly.
- The **bell** and **intrusion** (the pipe under the bell) are part of the trap, allowing sudden discharge after the water in the tank reaches a certain level. These two parts are the true siphon, because they allow water to be drawn down nearly to the tank bottom.
- The **45° angle** on the intrusion reduces the swirling as the water rushes into the intrusion, improving rate of discharge.
- The **trap** is a U tube in which a column of water balances air pressure developed under the bell. When the water column can no longer balance the air pressure, the tank flushes.
- The **bell air-charging hole** provides a path for air to enter the bell after a flush.
- The **trap-charging hole** replaces water in the trap to prevent the loss of air by forming a water seal. This feature permits operation with a long downpipe.
- The **downpipe** directs the flushing water where it is required and increases the discharge rate when the tank is elevated.

Fig 4 compares a common siphon and the siphon in the flush tank. Fig 4a shows what the water levels would be after we have inserted the siphon hose into the tank. If we suck on the outlet end of the siphon hose, flow starts, Fig 4b, and continues with the hose full, Fig 4c, until the water level reaches the inlet to the siphon hose, Fig 4d. Fig 4e shows the siphon-flush tank just before flushing. This corresponds to the same condition shown in Fig 4a. When the siphon-flush tank flushes, flow starts, Fig 4f, and continues with the downpipe flowing full, Fig 4g, until the water level in the tank is below the rim of the bell, Fig 4h. In both cases, flow continues until air is drawn into inlet and the siphon is broken.

Fig 4. Common siphon compared with the siphon-flush tank.

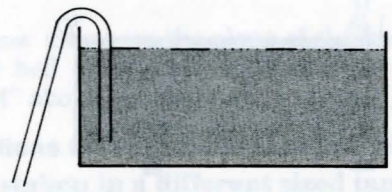

4a. Common siphon before flow begins.

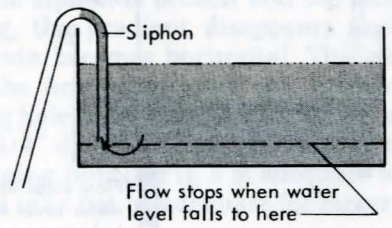

4b. Suction starts siphon.

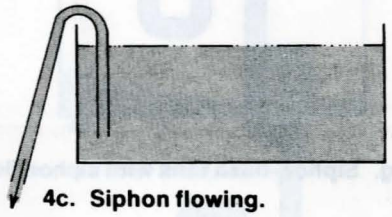

4c. Siphon flowing.

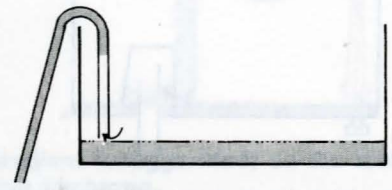

4d. Air in inlet stops the siphon.

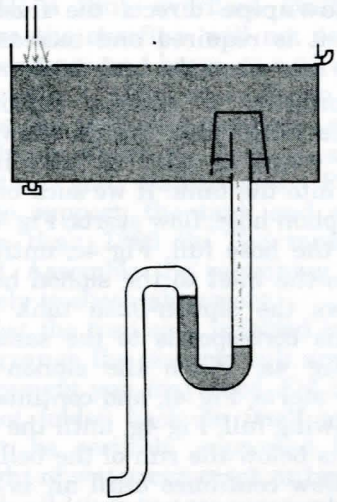

4e. Siphon-flush tank before flushing.

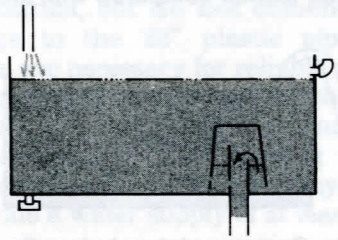

4f. Pressure starts siphon.

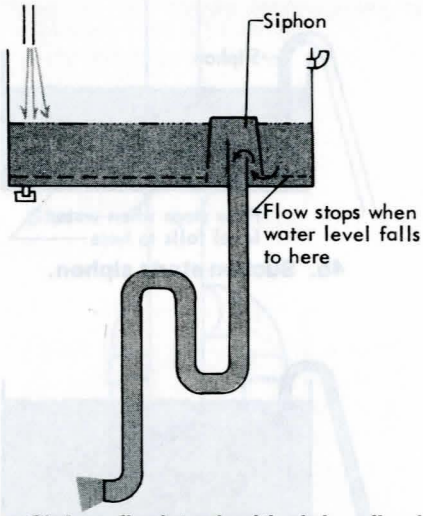

4g. Siphon-flush tank with siphon flowing.

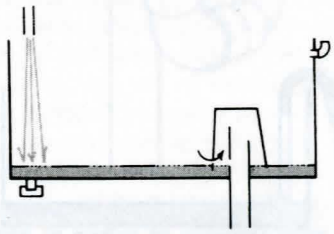

4h. Air in inlet stops siphon.

Filling

Immediately after discharge, Fig 4h, the water surface in the tank is slightly above the bottom of the bell. But, it is below the bell air-charging hole, allowing air into the bell. Some water remains in the trap, but much may have been carried out by the strong pull of the column of water in a long downpipe.

As water flows into the tank, the water level in the tank rises until it covers the bell air-charging hole. The air under the bell and in the first leg of the trap is now sealed in by water. The water level in the tank continues to rise, compressing the air in the bell. This pressure is balanced by water rising in the center leg of the trap. Because the water also covers the trap-charging hole, water flows slowly into the trap. A partly full condition is shown in Fig 5. Note that the difference in level between the water in the bell and in the tank is the same as the difference in level between the two legs of the trap, dimension Z.

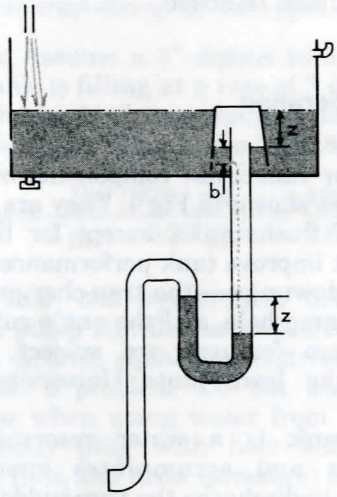

Fig 5. Liquid levels when the tank is partly full.

We can predict the water rise in the bell as the water falls in the first leg of the trap. Essentially, there are two linked "pistons"; one is the bell (bucket area minus intrusion pipe area), the other is the intrusion pipe. A 10 qt bucket is approximately a 10" dia (78 sq in.) cylinder and the 3" pipe cylinder is about 8 sq in. total and 7 sq in. inside. The ratio of the areas of the two "pistons" is about (78-8):7 or 10:1. Therefore, a drop of 1" in the water level in the first trap leg corresponds to a rise of 1/10" in the bell. In the siphon in Fig 2, the maximum water level difference is 15", so the rise in water level expected in the bell is about 1½" before the tank is ready to flush. To avoid early flushing of this size siphon-flush tank, the vertical distance between the bell air-charging hole and the

bottom of the 45° chamfer on the intrusion, dimension "b" in Fig 5, must be 3 3/4". This clearance allows for minor errors in construction.

The water flowing through the trap-charging hole overflows down the downpipe after the water fills the center leg. It is the difference in flow between the water entering the tank and that leaving the tank through the trap-charing hole that determines how fast the tank fills. The rate of flow through a 1/4" trap-charging hole is estimated to be less than 1/3 gpm. A flow rate into the tank over 2 gpm is recommended.

Discharge

At the instant the tank discharges, the difference between the two water levels in the trap exactly equals the height of the trap, both dimensions "a" in Fig 6. More liquid in the tank is not balanced by an increase in level difference in the trap, so a bubble of air is forced up the water-filled center leg of the trap. This bubble unbalances the equilibrium between the columns of water in the tank and the trap, so more air is forced through the trap and the water from the tank flows into the bell and through the trap.

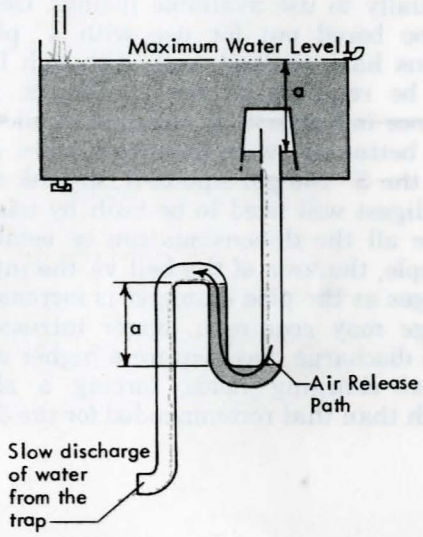

Fig 6. Liquid and air levels just before flushing.

In most siphons, the flow is so fast that almost all the air is removed from under the bell and the surface of the water in the tank does not remain flat as it drops. With no air in the system, the water flows out of the tank at a rapid rate. Fig 7. Water continues to flow until the siphon formed by the bell and the intrusion is broken by air being sucked under the bell. If the bell air-charging hole is too large, it lets in so much air that the siphon action is broken early.

As mentioned earlier, the water level in the tank can be 1/2" or more above the rim of the bell when flow stops. Therefore, the air-charging hole must be at least 3/4" above the bottom of the bell. With more than 1 siphon under a bell, the

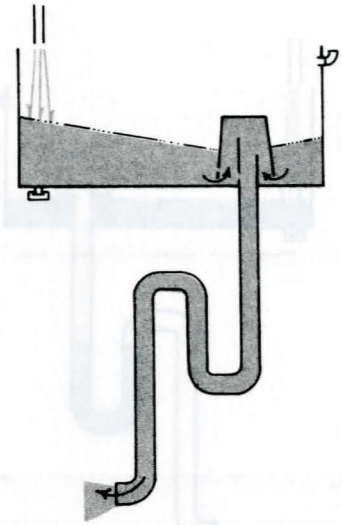

Fig 7. Siphon-flush tank flowing full and discharging.

faster flow increases the slope of the water surface and the bell charging hole may need to be more than 3/4" above the bottom of the bell.

Suggestions for multiple and larger units

One 3" siphon in a different sized tank

As a tank discharges, the water surface in the tank does not remain flat because a gradient (difference in elevation) is required to move water from the perimeter of the tank to the bell. Fig 8. When the siphon is broken and the tank stops discharging, the gradient disappears and the water level again becomes horizontal. The water returning to the horizontal level can submerge the air-charging hole before the bell has filled with air. Fig 9. The 3/4" distance between the bell rim and the air-charging hole in Fig 2 is adequate for a 150 gal tank but may not be adequate for larger ones.

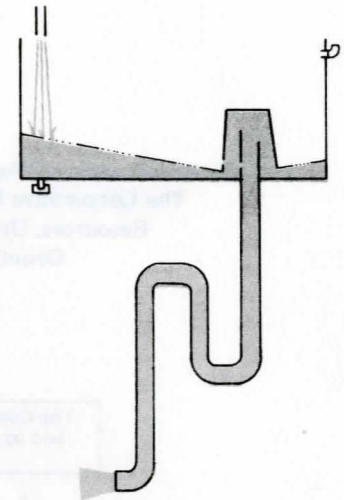

Fig 8. Gradient (exaggerated) on the tank-water surface during discharge.

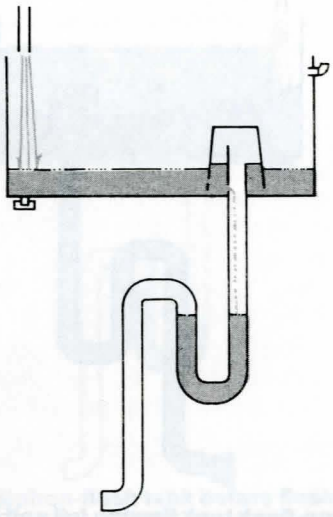

Fig 9. The air-charging hole in the bell may become submerged at the end of a flush causing the siphon to malfunction.

First drill one 1/4" hole in the standard position. Let the tank flush once and immediately shut off the inflow. As the siphon breaks, quickly mark the water level on the bell. If the air-charging hole is submerged, drill another 1/4" hole 1/2" above the water level. The trial holes need not be plugged.

If you use a tank with a height different from 24", adjust the length of the middle leg accordingly. Dimension "a" on Fig 6 determines the height in the main tank at discharge unless a very small bell is used. Although a definite measurement for any geometry of tank cannot be made, the center leg should be cut first to give:

Dimension "a" = tank height, in. - 9 in.

Example: Assume an operator is going to use a 30" deep tank. What is dimension "a"?

Dimension "a" = 30" - 9"

Dimension "a" = 21"

Multiple 3" siphons under one bell

The rapid release of air pressure in the bell causes the discharge. If multiple units are put under a common bell, all units will discharge at the same time even if all the trap lengths are not the same. An oval, janitor's mopbucket makes a good bell for two 3" siphons. Boxes of 16 gauge galvanized sheet metal can be built to serve as bells for more units. The bell should have approximately 20"-25" of perimeter for each 3" unit under it. Multiple units discharge so rapidly that the location of the air-charging hole must be determined by trial and error as described earlier.

Larger diameter pipes

Low-cost fittings are readily available for 3" pipe. Larger diameter pipe can be used for flush-siphons, but each unit must be designed individually to use available fittings. Closet flanges can be bored out for use with 4" pipe, and 4" siphons have worked well. Although larger pipes may be required in beef buildings, present experience indicates that multiple smaller units may work better for swine manure gutters. Any change from the 3" 150-gal siphon-flush tank described in this digest will need to be built by trial and error before all the dimensions can be established. For example, the area of the bell vs. the intrusion pipe changes as the pipe diameter is increased, and this change may require a longer intrusion. A more rapid discharge may require a higher elevation for the air-charging holes, forcing a shorter trap length than that recommended for the 3" siphon.

Extension work in "Agriculture, Home Economics and Subjects relating thereto,"
The Cooperative Extension Service, Institute of Agriculture and Natural Resources, University of Nebraska-Lincoln, Cooperating with the Counties and the U.S. Department of Agriculture
Leo E. Lucas, Director

The Cooperative Extension Service provides information and educational programs to all people without regard to race, color or national origin.

And Justice for All.

Midwest Plan Service publications are available to all potential clientele without regard to race, color, sex, or national origin. Anyone who feels discriminated against should send a complaint within 180 days to the Secretary of Agriculture, Washington, DC 20250. We are an equal opportunity employer.